GMC TRUCK

1992

SONOMA
JIMMY
SONOMA
JIMMY
SONOMA
JIMMY

SERVICE MANUAL

CAUTION

To reduce the chance of personal injury and/or property damage, the following instructions must be carefully observed:

Proper service and repair are important to the safety of the service technician and the safe, reliable operation of all motor vehicles. If part replacement is necessary, the part must be replaced with one of the same part number or with an equivalent part. Do not use a replacement part of lesser quality.

The service procedures recommended and described in this service manual are effective methods of performing service and repair. Some of these procedures require the use of tools specifically designed for the purpose.

Accordingly, anyone who intends to use a replacement part, service procedure, or tool which is not recommended by the vehicle manufacturer, must first determine that neither his safety nor the safe operation of the vehicle will be jeopardized by the replacement part, service procedure, or tool selected.

It is important to note that this manual contains various Cautions and Notices that must be carefully observed in order to reduce the risk of personal injury during service or repair, or the possibility that improper service or repair may damage the vehicle or render it unsafe. It is also important to understand that these 'Cautions' and 'Notices' are not exhaustive, because it is impossible to warn of all the possible hazardous consequences that might result from failure to follow these instructions.

Special service tools that are shown in this service manual that have tool product numbers beginning with "J" or "BT" are available for worldwide distribution from:

Kent-Moore
SPX Corporation
29784 Little Mack
Roseville, MI 48066-2298
1-800-345-2233
Mon.-Fri. 8:00 p.m. EST
Telex: 244040 KMTR VR
FAX: 313-578-7375

General Motors dealers can purchase TECH 1 scan tools and accessories through Kent-Moore at the above address and phone number. Non-General Motors dealer repair facilities can purchase TECH 1 scan tools and accessories from Kent-Moore at the above address or:

Sun Electric Corporation
One Sun Parkway
Crystal Lake, IL 60014
1-800-CALLSUN (225-5786)
6:45 a.m. - 7:00 p.m. CST

1992
SERVICE MANUAL
SONOMA AND JIMMY MODELS

FOREWORD

This service manual contains diagnosis, on-vehicle maintenance, and light repair for Sonoma and Jimmy Models. Fuel and emissions related components for throttle body injection vehicles are covered in the Light Duty Truck Fuel and Emissions Manual. Procedures involving disassembly and assembly of major components for these vehicles are published in the Light Duty Truck Unit Repair Manual. Wiring diagrams and electrical diagnosis for these models are published in the Electrical Diagrams and Diagnosis Manual.

This manual should be kept in a handy place for ready reference. If properly used, it will meet the needs of technicians and vehicle owners.

When reference is made in this manual to a brand name, number, or specific tool, an equivalent product may be used in place of the recommended item.

All information, illustrations, and specifications contained in this manual are based on the latest product information available at the time of publication approval. The right is reserved to make changes at any time without notice.

NOTICE: When fasteners are removed, always reinstall them at the same location from which they were removed. If a fastener needs to be replaced, use the correct part number fastener for that application. If the correct part number fastener is not available, a fastener of equal size and strength (or stronger) may be used. Fasteners that are not reused, and those requiring thread locking compound will be called out. The correct torque value must be used when installing fasteners that require it. If the above conditions are not followed, parts or system damage could result.

GMC TRUCK DIVISION
TRUCK & BUS GROUP
General Motors Corporation
Pontiac, Michigan

X-9229
©1991 General Motors Corporation
Printed in Canada
May, 1991
All rights reserved

No part of this publication may be reproduced, stored in any retrieval system, or transmitted, in any form or by any means, including but not limited to electronic, mechanical, photocopying, recording or otherwise, without the prior written permission of the GMC Truck Division of General Motors Corp. This includes all text, illustrations, tables, and charts.

TABLE OF CONTENTS

The table of contents on this page indicates the sections covered in this manual. At the beginning of each individual section is a table of contents which gives the page number on which each major subject begins.

SECTION	SUBJECT	CONTENTS	
0	GENERAL INFORMATION	0A GENERAL INFORMATION 0B MAINTENANCE AND LUBRICATION	0C VIBRATION DIAGNOSIS
1	HEATING AND AIR CONDITIONING	1A HEATING AND VENTILATION	1B AIR CONDITIONING
2	FRAME AND SHEET METAL	2A FRAME AND BUMPERS	2B SHEET METAL
3	STEERING, SUSPENSION, TIRES AND WHEELS	3A FRONT END ALIGNMENT 3B1 POWER STEERING 3B2 MANUAL STEERING 3B3 STEERING LINKAGE 3C FRONT SUSPENSION	3D REAR SUSPENSION 3E TIRES AND WHEELS 3F1 STEERING COLUMN—STANDARD 3F2 STEERING COLUMN—TILT
4	PROPELLER SHAFT AND AXLES	4A PROPELLER SHAFT 4B1 REAR AXLE	4C FRONT DRIVING AXLE
5	BRAKES	5A HYDRAULIC BRAKES 5A1 HYDRAULIC BRAKE BOOSTER SYSTEMS 5A2 HYDRAULIC FOUNDATION BRAKES	5C PARKING BRAKES 5E1 FOUR WHEEL ANTILOCK BRAKE SYSTEM 5E3 REAR-WHEEL ANTILOCK BRAKE SYSTEM
6	ENGINE	6 ENGINE 6A ENGINE, DRIVEABILITY, AND DIAGNOSIS 6A1 2.5L L4 6A2 2.8L V6 6A3 4.3L V6 6B1 ENGINE COOLING 6B2 RADIATOR 6C FUEL SYSTEM	6D ENGINE ELECTRICAL 6D1 BATTERY 6D2 CRANKING SYSTEM 6D3 CHARGING SYSTEM 6D4 IGNITION SYSTEM 6D7 ENGINE WIRING 6E EMISSIONS 6F EXHAUST
7	TRANSMISSION	7A AUTOMATIC TRANSMISSION 7A1 4L60 AUTOMATIC TRANSMISSION	7B MANUAL TRANSMISSION 7C CLUTCH 7D TRANSFER CASE
8	ELECTRICAL	8A CAB ELECTRICAL 8B LIGHTING SYSTEMS 8C INSTRUMENT PANEL AND GAGES	8D CHASSIS ELECTRICAL 8E WIPER/WASHER SYSTEMS
9	ACCESSORIES	9A AUDIO SYSTEMS 9B CRUISE CONTROL	9E ENGINE BLOCK HEATER 9F LUGGAGE CARRIER
10	BODY	10A1 DOORS 10A2 SEATS 10A3 WINDOWS	10A4 INTERIOR TRIM 10A5 END GATE 10B CAB MAINTENANCE
	INDEX	ALPHABETICAL INDEX	

Mr. Goodwrench wants you to have the right parts for your GM Truck.

GENUINE GM PARTS

Mr. Goodwrench wants you to have the right parts for your truck—whether you see him for service or whether you do the work yourself.

That's why Mr. Goodwrench wants to have a good stock of genuine GM Parts available. Everything from exclusive GM Goodwrench replacement engines and transmissions to GM Goodwrench Motor Oil that meets or exceeds all specifications for General Motors cars or light trucks. And Mr. Goodwrench has a complete line of GM chemicals for fine care of your GM vehicle. Plus accessories to add convenience — or just a little extra style.

So keep that great GM feeling with geniune GM parts at participating independent Mr. Goodwrench dealers selling Chevrolets, Pontiacs, Oldsmobiles, Buicks, Cadillacs, GMC and Chevy Trucks.

GM Parts

Mr. Goodwrench

SP157

For Adistra Use Only

Order Number _____

Date Filled _____

Other GMC Truck Service Publications For Your Sonoma or Jimmy Model:

Form Description	Form No.	Price Each (U.S. Only)	Qty.	Total
Light Duty Truck Unit Repair Manual	X-9237	$36.00		$
Electrical Diagrams and Diagnosis Manual	X-9244	$31.00		$
			Sub Total	$
			Only Michigan Purchasers Add Sales Tax	$
			Rush Order Charge	$
			Overnight Delivery	
			Grand Total	

Refunds or exchanges will not be accepted after 30 days.
Routine orders will be shipped within 10 days of receipt.
For an additional charge of $9.00 Rush Orders will be shipped within 24 hours of receipt.
Please allow adequate time for postal service.
*We also offer UPS-Overnight Express-Call for Rates.
Prices subject to change without notice.

Prices Subject to Change

Sold To: (Also Fill out Shipping Label)

Company Name (Please Print Clearly)

Name

Street Address Apt. No.

City, State, and Zip Code

This is your shipping label Please Print Clearly
From:
Adistra Corporation
Attn: GMC Service Publications
171 Hamilton St.
Plymouth, Michigan 48170

Company

Attn:

Street Address

City, State, and Zip Code

☐ Check or Money Order Enclosed
Make checks payable to Adistra Corporation (No Stamps)

Please be sure to sign your check!!

☐ Please Charge to my ☐ VISA ☐ Master Card ☐ American Express

Card Number_____

Bank No. Master Card_____Exp. Date_____
Mo. Yr.

Card Holders Signature_____

Daytime Telephone No. (____) _____

Mail to:
Adistra Corporation
Attn: GMC Service Publications
P.O. Box 436006
Pontiac, Michigan 48343

Or:
Call Toll Free within continental U.S.A.
1-800-627-5699

SECTION 0

GENERAL INFORMATION

CONTENTS

SUBJECT	PAGE
General Information	0A-1
Maintenance and Lubrication	0B-1
Vibration Diagnosis	0C-1

SECTION 0A

GENERAL INFORMATION

CONTENTS

SUBJECT	PAGE
Handling Electrostatic Discharge (ESD) Sensitive Parts	0A- 1
Vehicle Certification Label	0A- 2
Vehicle Identification Number (VIN)	0A- 2
Model Identification	0A- 2
Engine Identification Number	0A- 4
Transmission Identification Number	0A- 4
General Vehicle Lifting and Jacking	0A- 4
Lock Cylinder Coding	0A- 6
Metric Fasteners	0A- 8
Fastener Strength Identification	0A- 9
Prevailing Torque Fasteners	0A- 9
Metric-English Conversion	0A-10
Decimal and Metric Equivalents	0A-10
Common Automotive Abbreviations	0A-14
Replacement Labels	0A-15
Service Parts Identification Label	0A-15
RPO Code Listing (Regular Production Option)	0A-15

HANDLING ELECTROSTATIC DISCHARGE (ESD) SENSITIVE PARTS

Many solid state electrical components can be damaged by Electrostatic Discharge (ESD). Some will display a label, but many will not (figure 1).

NOTICE: In order to avoid possibly damaging any components, observe the following:

1. Body movement produces an electrostatic charge. To discharge personal static electricity, touch a ground point (metal) on the vehicle. This should be done any time you:

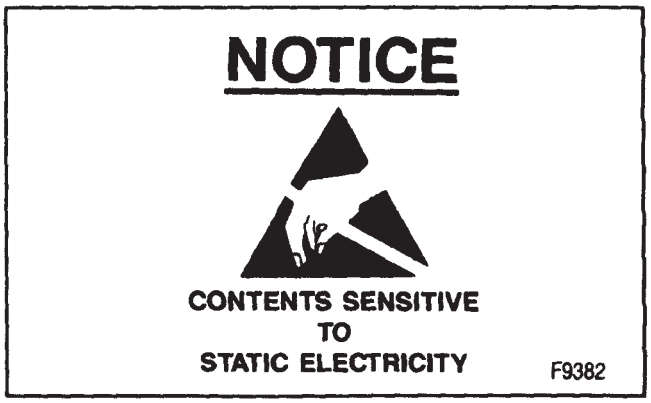

Figure 1—Electrostatic Discharge Symbol

- Slide across the car seat.
- Sit down or get up.
- Do any walking.

2. Do not touch exposed electric terminals on components with your finger or any tools. Remember, the connector that you are checking might be tied into a circuit that could be damaged by electrostatic discharge.
3. When using a screwdriver or similar tool to disconnect a connector, never let the tool come in contact with or come between the exposed terminals.
4. Never jumper, ground, or use test equipment probes on any components or connectors unless specified in diagnosis. When using test equipment, always connect the ground lead first.
5. Do not remove the solid state component from its protective packaging until you are ready to install the part.
6. Always touch the solid state components package to a ground before opening. Solid state components can also be damaged if:
   - They are bumped or dropped.
   - They are laid on any metal work benches or components that operate electrically, such as a TV, radio or oscilloscope.

VEHICLE CERTIFICATION LABEL

The vehicle certification label indicates the GVWR (Gross Vehicle Weight Rating), front and rear GAWR (Gross Axle Weight Rating), and the payload rating for the vehicle (figures 2 and 3).

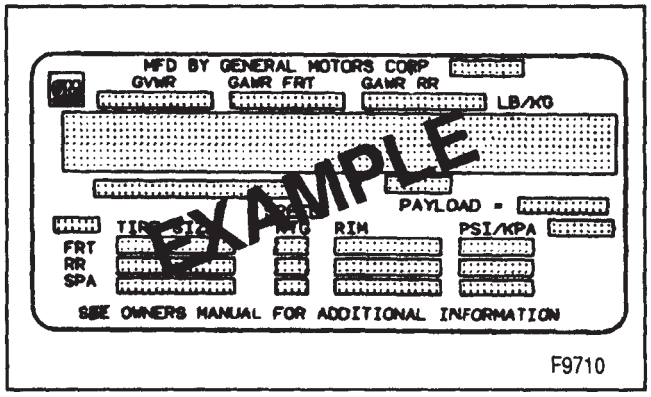

Figure 2—Complete Vehicle Certification Label

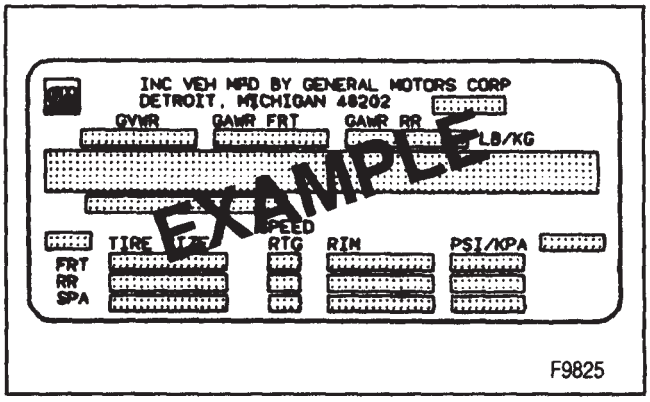

Figure 3—Incomplete Vehicle Certification Label

The gross vehicle weight (GVW) is the weight of the originally equipped vehicle and all items added to it after it has left the factory. This would include bodies, winches, booms, etc., the driver and all occupants; and the load the vehicle is carrying. The gross vehicle weight (GVW) must not exceed the gross vehicle weight rating (GVWR). Also, the front and rear gross axle weights (GAW) must not exceed the front and rear GAWR (Gross Axle Weight Rating).

The payload rating shown on the label is the maximum allowable cargo load (including the weight of the driver and all occupants) that the vehicle can carry based on all factory installed equipment on the vehicle. The payload rating is reduced if any accessories or other equipment is added to the vehicle after final date of manufacture. The weight of these items should be determined and deducted from the payload rating.

The vehicle may also have a GCWR (Gross Combination Weight Rating). The GCW (Gross Combination Weight) is the total weight of the loaded tow vehicle (including passengers) and a loaded trailer.

The tires on the vehicle must be the proper size and properly inflated for the load which you are carrying. The vehicle certification label shows the originally equipped tire size and recommended inflation pressures. For more information on tires, refer to TIRES AND WHEELS (SECTION 3E).

VEHICLE IDENTIFICATION NUMBER (VIN)

The vehicle identification number (VIN) is the seventeen digit legal identifier of the vehicle. It is located on a plate which is attached to the left top of the instrument panel and can be seen through the windshield from outside the vehicle (figure 4). To find the manufacturer, model and chassis type, engine type, GVW (Gross Vehicle Weight) range, model year, plant code, and sequential number, refer to figure 5.

MODEL IDENTIFICATION

Models and body styles are listed in figure 6.

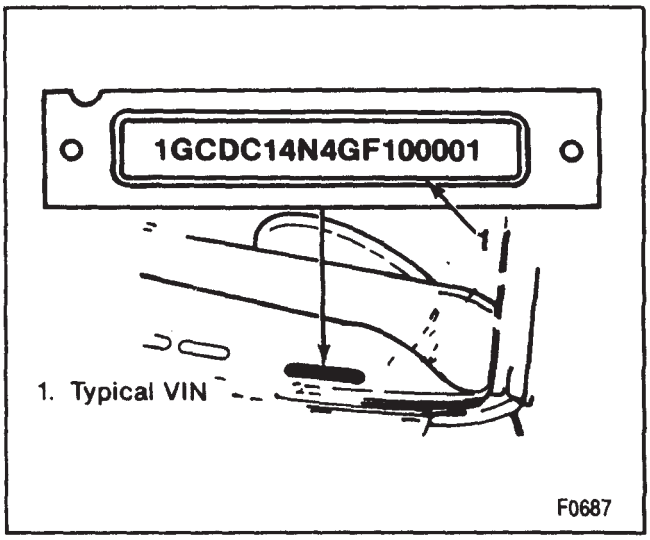

Figure 4—Vehicle Identification Number (VIN) Location

VEHICLE IDENTIFICATION NUMBER (VIN)

2 G C D S 1 4 A 8 N 8 1 3 2 1 6 6

Nation of Origin
1 = US Built
2 = Canadian Built

Manufacturers
G = General Motors

Code	Make
B	Chevrolet Incomplete
C	Chevrolet Truck
D	GMC Incomplete
H	Oldsmobile MPV
K	GMC MPV
N	Chevrolet MPV
T	GMC Truck

GVWR/BRAKE SYSTEM

Code	GVWR Range	Brake System
B	3001-4000	Hydraulic
C	4001-5000	Hydraulic
D	5001-6000	Hydraulic
E	6001-7000	Hydraulic
F	7001-8000	Hydraulic
G	8001-9,000	Hydraulic
H	9,001-10,000	Hydraulic
J	10,001-14,000	Hydraulic
K	14,001-16,000	Hydraulic

Code	Series
1	1/2 Ton

Code	Body Type
3	Four-Door Cab/Utility
4	Two-Door Cab
8	Two-Door Utility
9	Extended Cab/Extended Van

Line and Chassis Type

Code	Line	Chassis Type
S	Sm Conventional Cab	4x2
T	Sm Conventional Cab	4x4

Check Digit

Code	Year
N	1992

Engine Type and Make

Code	Producer	Type	RPO
A	CPC	2.5L4 EFI	L38
R	CPC	2.8L V6 EFI	LL2
Z	CPC	4.3L V6 EFI	LB4
W	CPC	4.3L V6 CPI	L35

Production Sequence Number

Assembly Plant

O	Pontiac, MI
2	Moraine, OH
8	Shreveport, LA

V1964

Figure 5—Vehicle Identification Chart

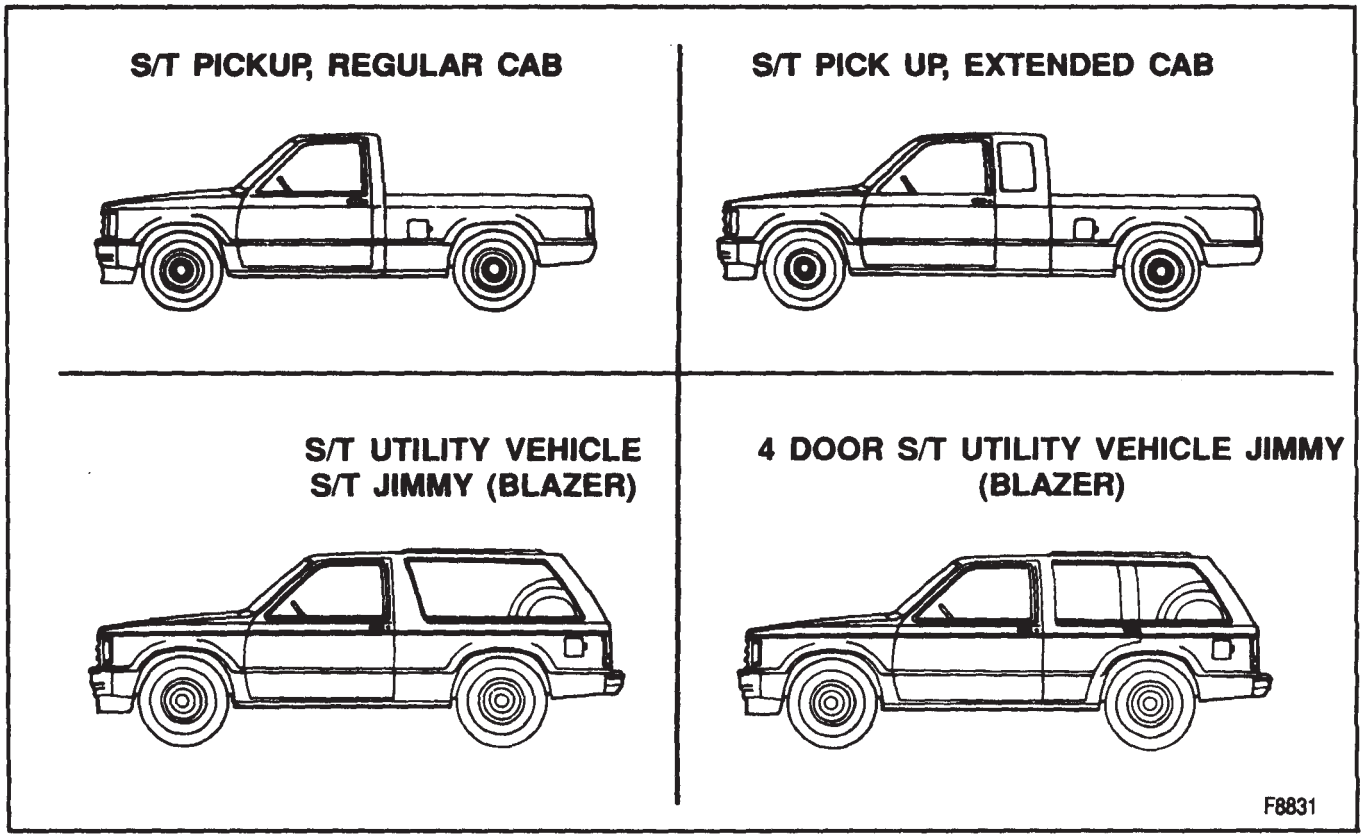

Figure 6—Model Identification

ENGINE IDENTIFICATION NUMBER

The vehicle identification number provides detailed VIN code information by liter and by the engine code letter located on the vehicle identification plate.

Stick-on labels attached to the engine, or laser etching or stampings on the engine block, indicate the engine unit number or date code.

All engines are stamped with an engine identification number. The stamping contains eight positions (figures 7, 8 and 9).

TRANSMISSION IDENTIFICATION NUMBER

Manual and automatic transmission model identification is located on a label or tag applied to the transmission case. If the label or tag is missing or unreadable, use the service parts identification label to determine which transmission was installed in the vehicle (figures 10, 11 and 12).

GENERAL VEHICLE LIFTING AND JACKING

The only lift points for these vehicles are shown in figure 13, and are described in the following paragraphs. The jack and hoist lift points for the front end of the S/T vehicles are the frame rails between the front body mounts and the transmission crossmember. The vehicle jack and hoist lift points for the rear end of the S/T vehicles are the rear spring front hangers.

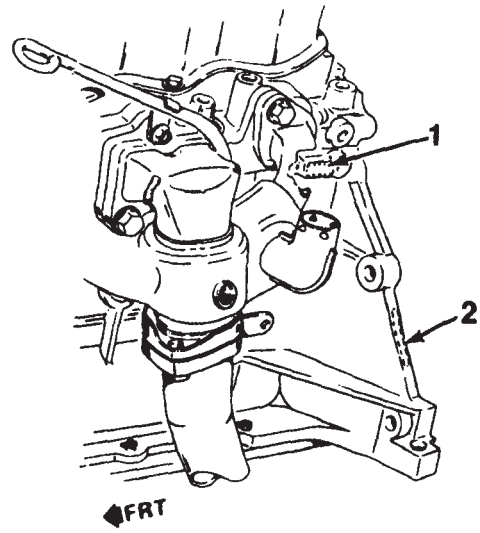

1. Engine I.D. Location
2. Optional Engine I.D. Location

F6612

Figure 7—2.5L L4 Engine I.D. Location

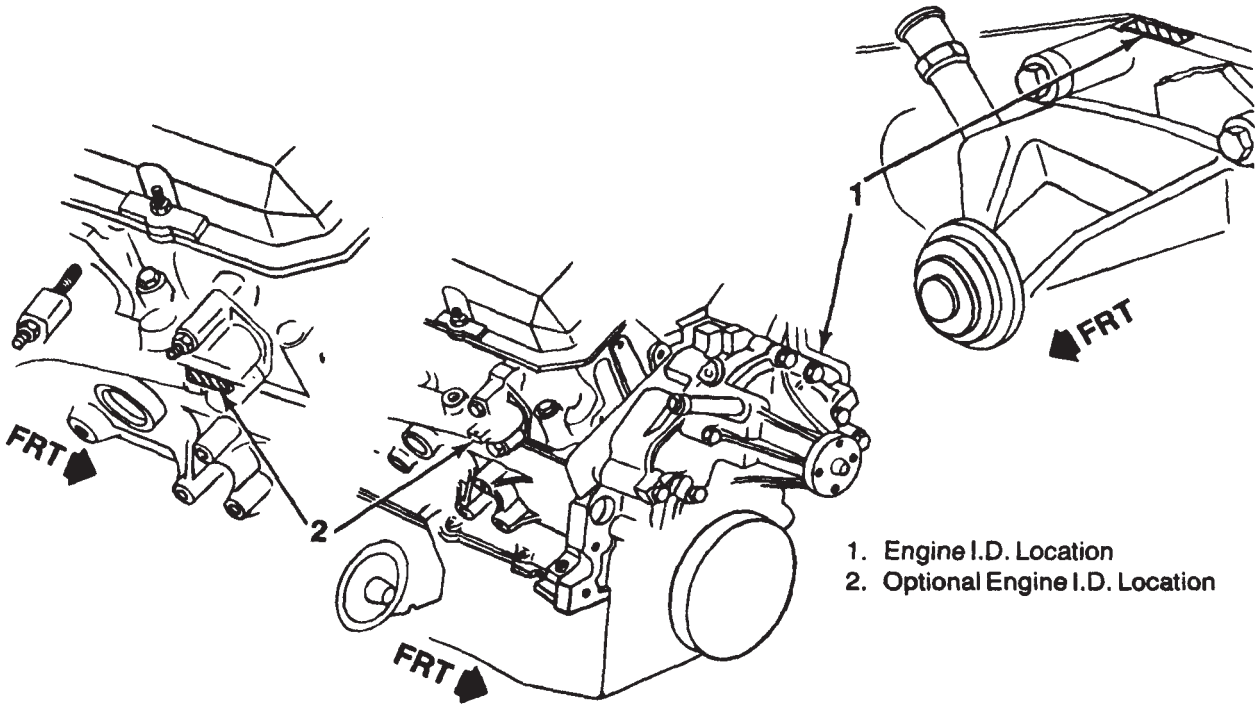

1. Engine I.D. Location
2. Optional Engine I.D. Location

F6613

Figure 8—2.8L V6 Engine I.D. Location

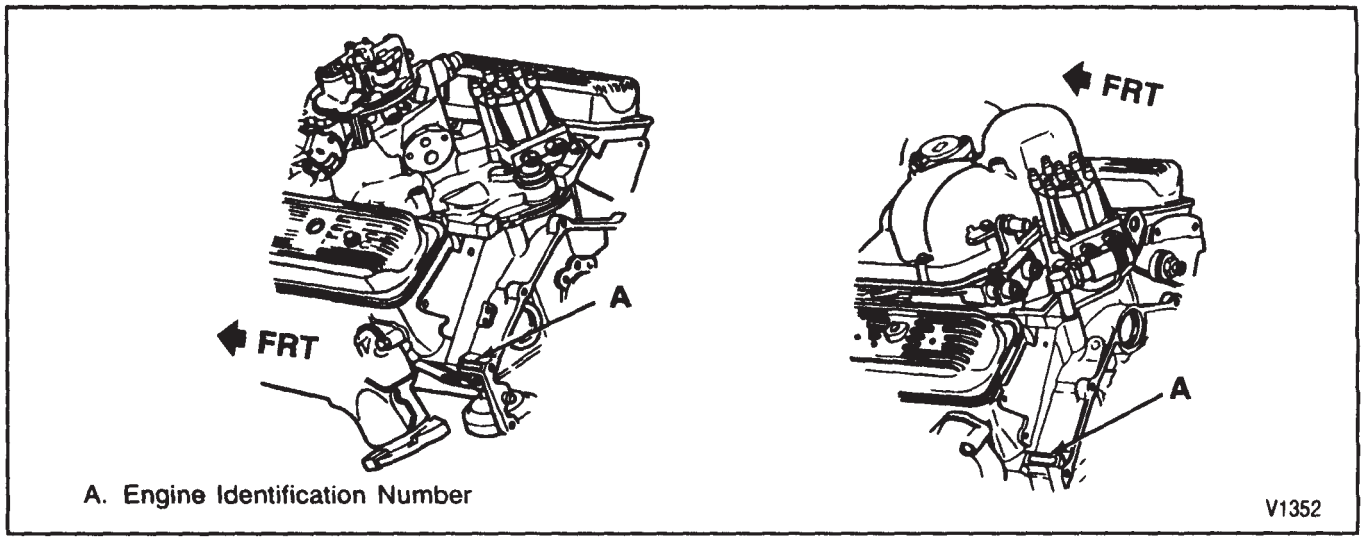

Figure 9—4.3L V6 Engine I.D. Location

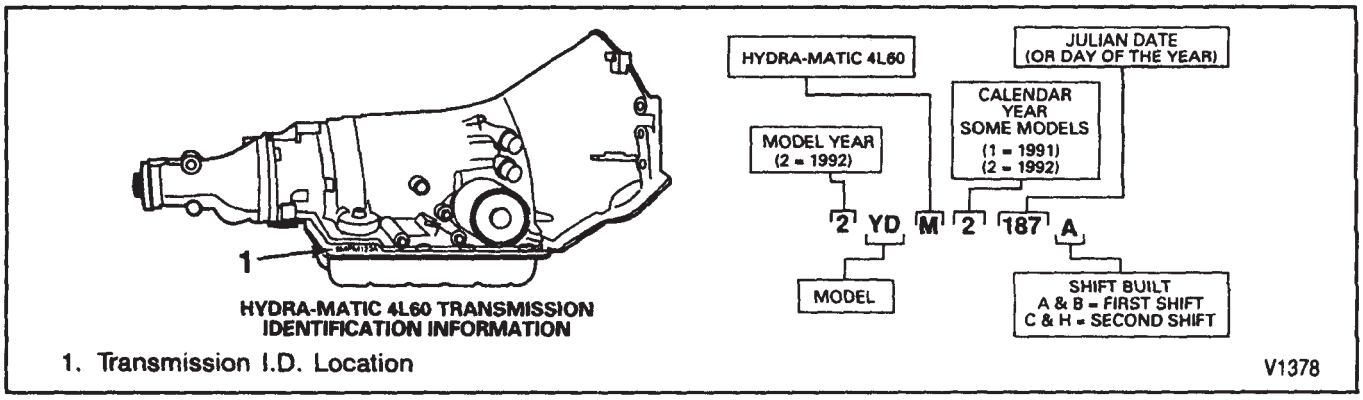

Figure 10—Hydra-Matic 4L60 Transmission I.D. Location

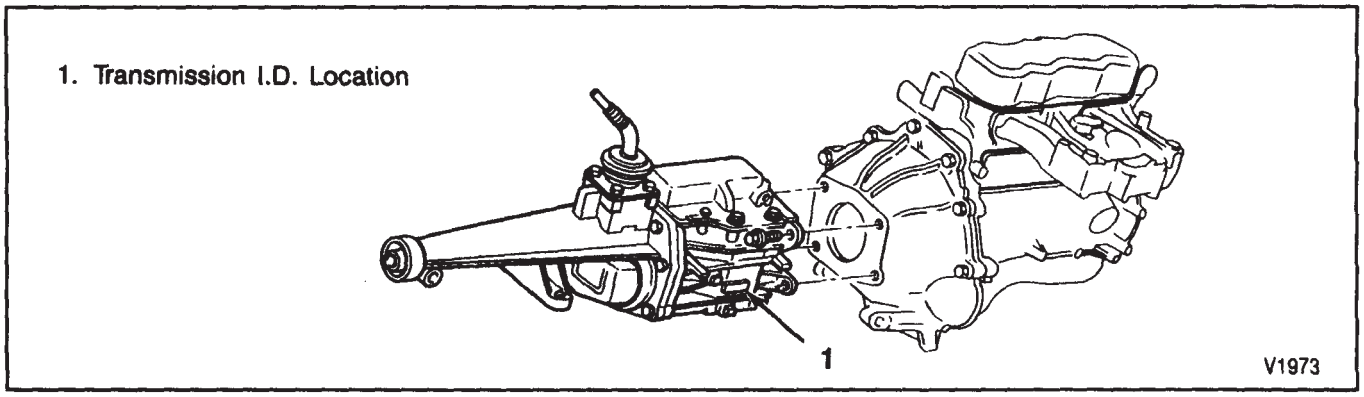

Figure 11—Borg Warner T-5 Manual Transmission I.D. Location

The front end lift points for the floor jack are under the lower control arms and inboard from the ball joints. The front end can also be lifted with a floor jack located at the center of the front crossmember.

The rear end of the S/T vehicles can be lifted with a floor jack, lifting on the axle housing just inboard from the shock absorber mounts. Also, the rear end can be lifted by using a floor jack on the axle differential.

Anytime a vehicle is lifted with a vehicle jack or a floor jack, the wheels at the opposite end of the lifted end should be chocked. Also, jack stands should be used to provide support. When supporting the vehicle with jack stands, the jack stands should be placed under the frame, the front suspension crossmember or the axle.

When removing major components of the vehicle while the vehicle is on a hoist, the vehicle frame should be chained to the hoist pads in order to prevent tip-off.

NOTICE: When jacking or lifting a vehicle, be certain that the lift pads do not contact the catalytic converter, brake lines, brake cables, or fuel lines. Such contact may result in damage or unsatisfactory vehicle performance.

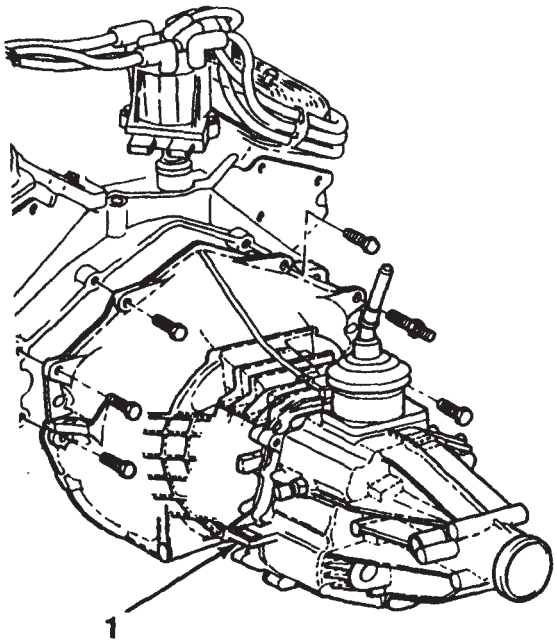

1. Transmission I.D. Location

V1974

Figure 12—New Venture Gear 5LM60 Manual Transmission I.D. Location

LOCK CYLINDER CODING

KEY IDENTIFICATION AND USAGE

The lock cylinder keyway is designed so that other model keys will not enter a current model lock cylinder. Two non-interchangeable keys are used. The square headed key is used in the ignition lock cylinder. The oval headed key is used in all other lock cylinders.

Key identification is obtained from the four character key code stamped on the knockout portion of the key head and an identification letter stamped on the key shank. After the code number has been recorded by the owner, the plugs should be knocked out of the key head. From these numbers, the lock combination can be determined by use of a code list. This list is available to owners of key cutting equipment from equipment suppliers. If the key code numbers are not available from records or from the knockout plug, the lock combination (tumbler numbers and position) can be determined by laying the key on the diagram in figure 14.

CUTTING KEYS

1. Determine the code from the code list or the key code diagram (figure 14).
2. Cut a blank key to the proper level for each of six tumbler positions.
3. Check the key operation in the lock cylinder.

REPLACEMENT LOCK CYLINDERS

Lock cylinders are available from service parts warehouses. The new cylinder has a locking bar staked in place. Tumblers are also available and must be assembled into the cylinder.

ASSEMBLING AND CODING LOCK CYLINDERS

All Lock Cylinders Except Instrument Panel Compartment

Tumblers for all locks are shaped exactly alike with the exception of the notch position on one side. As the key is inserted in the lock cylinder, tumblers are lowered to the correct heights so that notches on each tumbler are at the same level. When the notches on all tumblers line up, the side bar is pushed into the notches by two small springs. This allows the cylinder to turn in its bore. Five types of tumblers are used to make the various lock combinations. Each tumbler is coded according to a number, 1 through 5, stamped on its side.

Assemble (Figures 15 and 16)

1. Determine the tumbler numbers and arrangement.
   a. With the numerical key code, use the code list provided by a key cutting equipment supplier.
   b. Without the numerical key code or without a code list, refer to figure 14.
      — Lay the key on the key code diagram. Be sure the key is outlined by the diagram.
      — Start with position number one. Find and record the lowest level (tumbler number) that is visible. Repeat for each of the remaining five positions.
2. Starting with position one (the open end or head of the cylinder), insert tumblers in their proper slots in the order called for by the code (figure 15).
3. Pull the side bar out so that the tumblers will drop completely into place.
4. Insert one tumbler spring above each tumbler.
5. Insert the spring retainer so that the end prongs slide into the slots at each end of the cylinder. Press the retainer down (figure 16).
6. Insert the key into the lock cylinder to check for proper installation. If the tumblers are installed properly, the side bar will drop down. If it doesn't, take the cylinder apart and reassemble it.

NOTICE: Use leather or wood at each vise jaw to prevent damage to the cylinder.

7. Remove the key and secure the cylinder in a vise with the spring retainer exposed.
8. Stake the spring retainer securely in place at each end. Use a suitable staking tool and stake the cylinder metal over the retainer.
9. Lock cylinders should be lubricated with GM multipurpose lubricant PN 12345120 or with a light oil (5W30).

Instrument Panel Compartment Lock Cylinder

A lock cylinder with snap-in tumblers is used for the instrument panel compartment lock (figures 17 and 18). The lock cylinder has four or five tumbler positions. The number 1 or 2 position (closes to the cylinder head) is a brass retainer tumbler. The 2 through 5 positions or 3 through 5 positions are standard tumbler

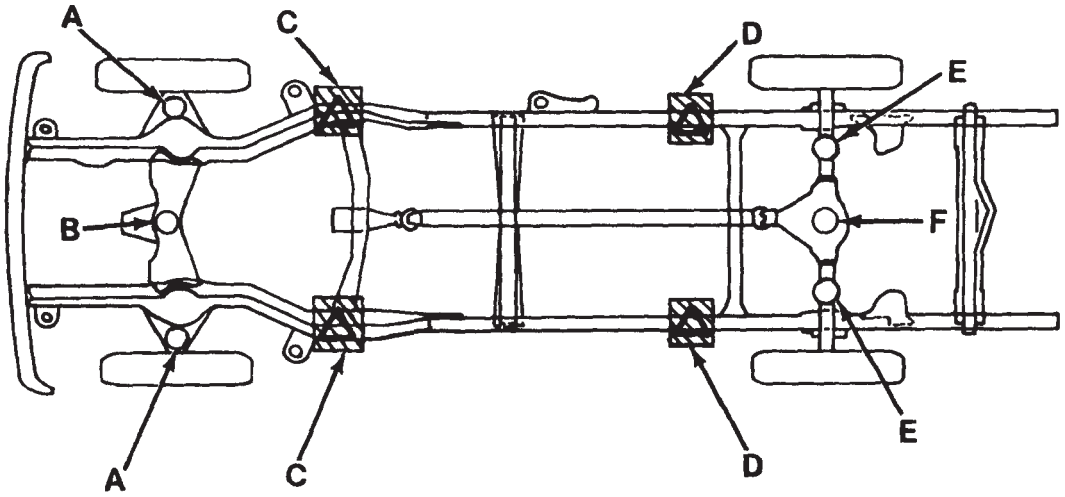

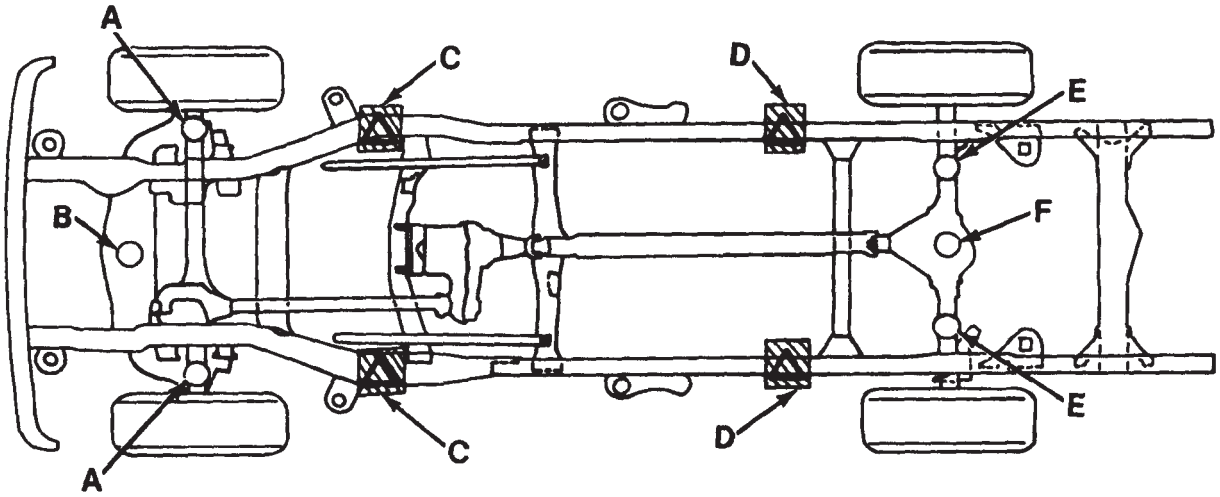

A. Lower Control Arm; Inboard of the Lower Ball Joint
B. Front Suspension Crossmember: Center
C. Frame; at Second Crossmember
D. Rear Spring; at Forward Spring Hanger
E. Axle; Inboard of Shock Absorber Hanger
F. Differential; at Center

△ Vehicle Jack or Floor Jack

○ Floor Jack

▨ Hoist

F5693

Figure 13—Vehicle Lifting Points

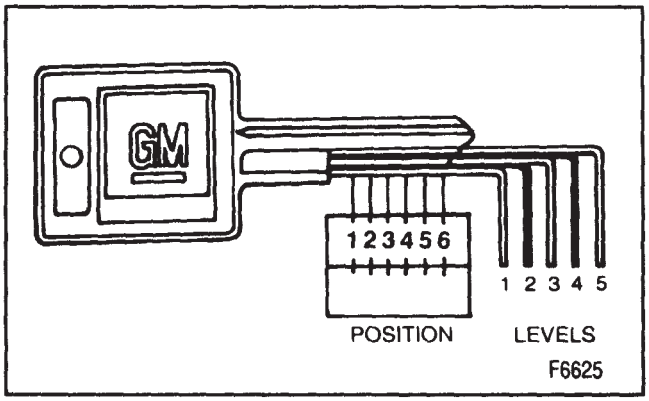

Figure 14—Key Code Diagram

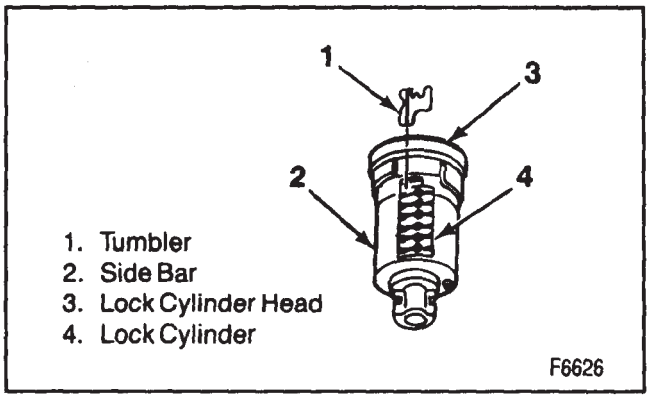

Figure 15-Installing Tumblers

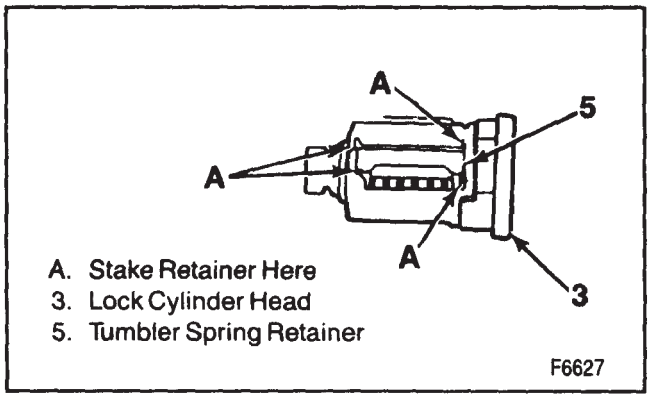

Figure 16—Installing Spring Retainer

positions depending on cylinder type. Therefore, only the last 4 or 5 tumbler combinations are required. To assemble the lock cylinder, determine the tumbler numbers and arrangement as previously described and install the tumblers.

METRIC FASTENERS

Current model GM vehicles are primarily dimensioned in the metric system. Many fasteners are metric and are very close in dimension to well-known customary fasteners in the inch system. It is most important that replacement fasteners be of the correct nominal diameter, thread pitch, and strength.

Original equipment metric fasteners (except "beauty" bolts, such as exposed bumper bolts, and cross recess head screws) are identified by a number or marking

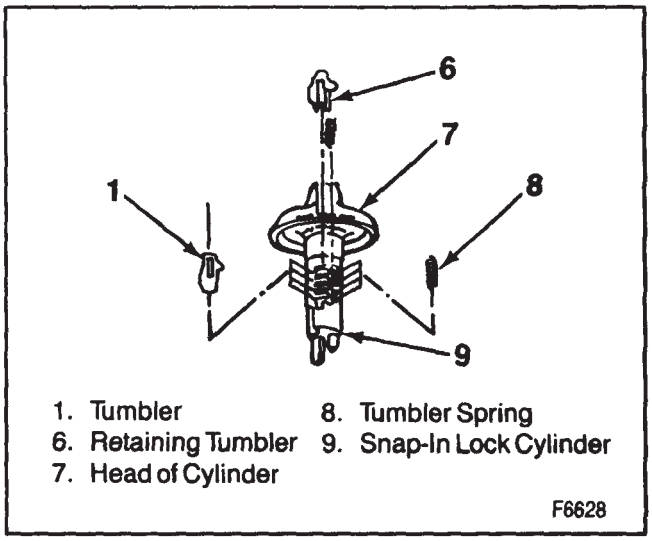

Figure 17—Installing Tumblers

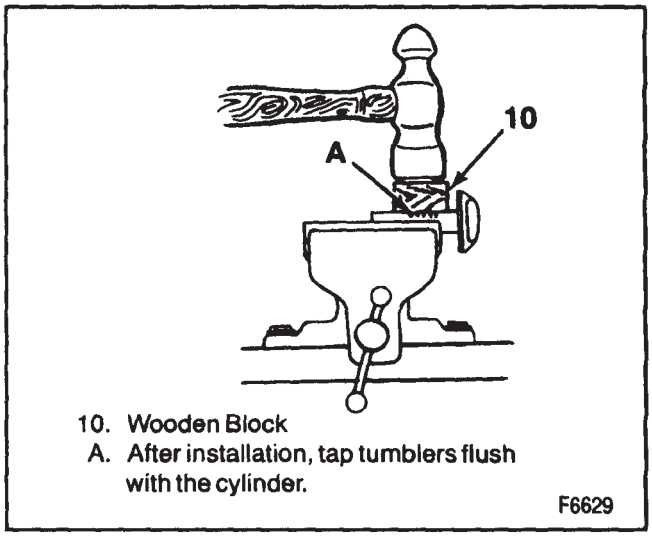

Figure 18—Locking the Tumblers in Place

indicating the strength of the material in the fastener as outlined later. Metric cross recess screws are identified by a Posidriv or Type 1A. Either a Phillips head or Type 1A cross recess screwdriver can be used in Posidriv recess screw heads, but Type 1A cross recess screwdrivers will perform better.

NOTICE: Most metric fasteners have a blue color coating. However, this should not be used as positive identification, as some fasteners are not color coated.

General Motors Engineering Standards, along with other North American Industries, has adopted a portion of the standard metric fastener sizes defined by ISO (International Standards Organization). This was done to reduce the number of fastener sizes used and yet retain the best strength qualities in each thread size. For example, the customary 1/4-20 and 1/4-28 screws are replaced by the metric M6.0X1 screw which has nearly the same diameter and has 25.4 threads per inch. The thread pitch is in between the customary coarse and fine thread pitches.

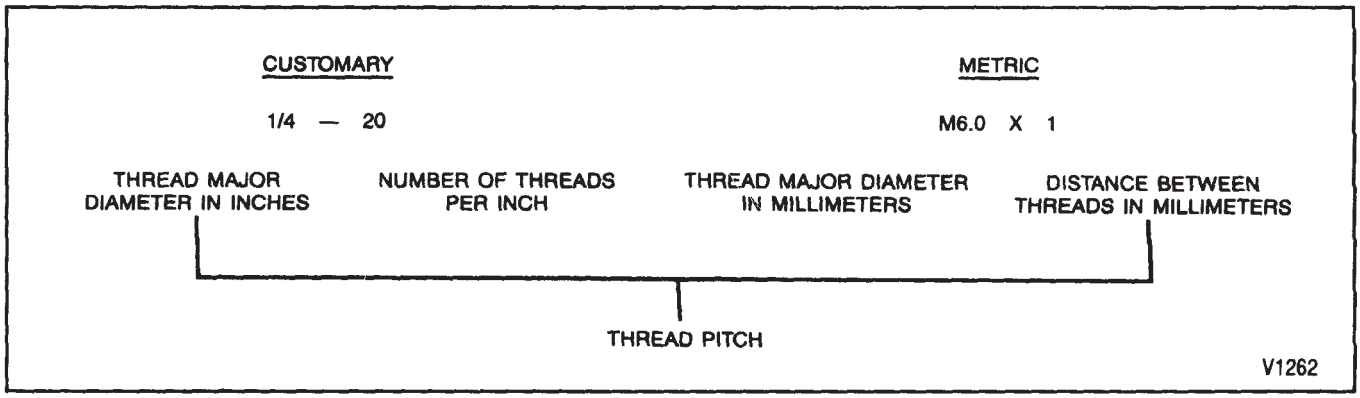

Figure 19—Thread Notation

Metric and customary thread notation differ slightly. The difference is shown in figure 19.

FASTENER STRENGTH IDENTIFICATION

Most commonly used metric fastener strength property classes are 9.8 and 10.9 with the class identification embossed on the head of each bolt. Customary (inch) strength classes range from grade 2 to 8 with radial line identification embossed on each bolt head. Markings correspond to two lines less than the actual grade (i.e.grade 7 bolt will exhibit 5 embossed radial lines on the bolt head). Some metric nuts will be marked with single digit strength identification numbers on the nut face. To review the different strength markings available, refer to figure 20.

When replacing metric fasteners, be careful to use bolts and nuts of the same strength or greater than the original fasteners (the same number marking or higher). It is likewise important to select replacement fasteners of the correct size. Correct replacement metric fasteners available in the aftermarket parts channels were designed to metric standards of countries other than the United States, and may be of a lower strength, may not have the numbered head marking system, and may be of a different thread pitch. The metric fasteners used on GM products are designed to new, international standards that may not yet be manufactured by some non-domestic bolt and nut suppliers.

PREVAILING TORQUE FASTENERS

A prevailing torque nut is designed to develop an interference between the nut and bolt threads. This is most often accomplished by distortion of the top of an all-metal nut by using a nylon patch on the threads in the middle of the hex flat. A nylon insert may also be used as a method of interference between nut and bolt threads (figure 21).

A prevailing torque bolt is designed to develop an interference between bolt and nut threads, or the threads of a tapped hole. This is accomplished by distorting some of the threads or by using a nylon patch or adhesive.

Recommendations For Reuse:

1. Clean, unrusted prevailing torque nuts and bolts may be reused as follows:
   a. Clean dirt and other foreign material off the nut or bolt.
   b. Inspect the nut or bolt to insure there are no cracks, elongation, or other signs of abuse or overtightening. (If there is any doubt, replace with a new prevailing torque fastener of equal or greater strength.)

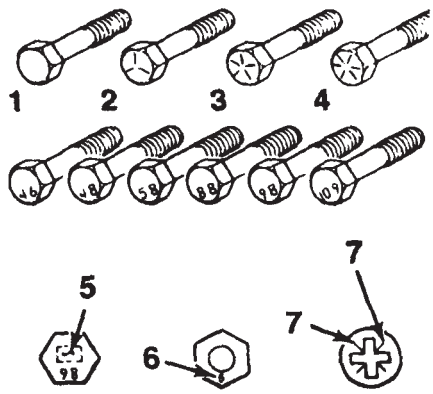

1. Grade 2 (GM 260-M)
2. Grade 5 (GM 280-M)
3. Grade 7 (GM 290-M)
4. Grade 8 (GM 300-M)
5. Manufacturer's Identification
6. Nut Strength Identification
7. Identification Marks (Posidriv Screw Head)

V1263

Figure 20—Fastener Strength Markings (Identification)

c. Assemble the parts and hand start the nut or bolt.
d. Observe that, before fastener seats, it develops torque per the chart in figure 20. (If there is any doubt, replace with a new prevailing torque fastener of equal or greater strength).
e. Tighten the fastener to the torque specified in the appropriate section of this manual.

2. Bolts and nuts which are rusty or damaged should be replaced with new parts of equal or greater strength.

METRIC-ENGLISH CONVERSION

For determining metric and english conversions, refer to figure 22.

DECIMAL AND METRIC EQUIVALENTS

For determining decimal and metric equivalents, refer to figure 23.

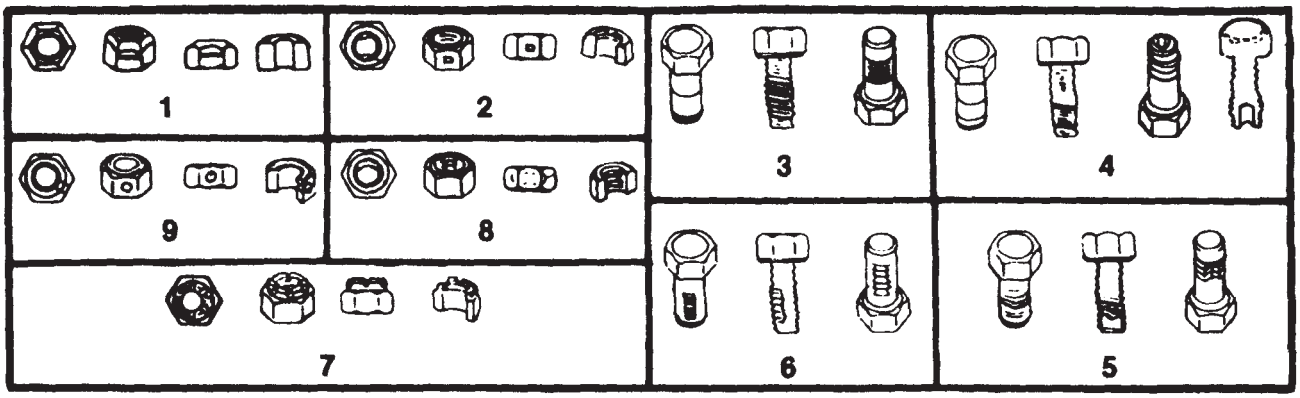

A

		6 & 6.3	8	10	12	14	16	20
4, 5	N·m	0.4	0.8	1.4	2.2	3.0	4.2	7.0
	In. Lbs.	4.0	7.0	12	18	25	35	57
1, 2, 3, 6, 7, 8, 9	N·m	0.4	0.6	1.2	1.6	2.4	3.4	5.6
	In. Lbs.	4.0	5.0	10	14	20	28	46

B

		.250	.312	.375	.437	.500	.562	.625	.750
4, 5	N·m	0.4	0.6	1.4	1.8	2.4	3.2	4.2	6.2
	In. Lbs.	4.0	5.0	12	15	20	27	35	51
1, 2, 3, 6, 8, 9	N·m	0.4	0.6	1.0	1.4	1.8	2.6	3.4	5.2
	In. Lbs.	4.0	5.0	9.0	12	15	22	28	43

A. Metric Sizes
B. Inch Sizes

1. Top Lock Type
2. Center Lock
3. Dry Adhesive Coating
4. Out of Round Thread
5. Deformed Thread Profile
6. Nylon Strip or Patch
7. Nylon Washer Insert
8. Nylon Patch
9. Nylon Insert

V1264

Figure 21—Prevailing Torque Nuts and Bolts

CONVERSION TABLE

Multiply	by	to get equivalent number of:
LENGTH		
Inch	25.4	millimeters (mm)
Foot	0.304 8	meters (m)
Yard	0.914 4	meters
Mile	1.609	kilometers (km)
AREA		
Inch^2	645.2	millimeters^2 (mm^2)
	6.45	centimeters^2 (cm^2)
Foot^2	0.092 9	meters^2 (m^2)
Yard^2	0.836 1	meters^2
VOLUME		
Inch^3	16.387	mm^3
	16.387	cm^3
	0.016 4	liters (l)
Quart 0.946 4	liters	
Gallon	3.785 4	liters
Yard^3	0.764 6	meters^3 (m^3)
MASS		
Pound	0.453 6	kilograms (kg)
Ton	907.18	kilograms (kg)
Ton	0.907	tonne (t)
FORCE		
Kilogram	9.807	newtons (N)
Ounce	0.278 0	newtons
Pound	4.448	newtons
TEMPERATURE		
Degree Fahrenheit	(†°F-32) ÷ 1.8	degree Celsius (C)

Multiply	by	to get equivalent number of:
ACCELERATION		
Foot/sec^2	0.304 8	meter/sec^2 (m/s^2)
Inch/sec^2	0.025 4	meter/sec^2
TORQUE		
Pound-inch	0.112 98	newton-meters (N·m)
Pound-foot	1.355 8	newton-meters
POWER		
Horsepower	0.746	kilowatts (kW)
PRESSURE OR STRESS		
Inches of water	0.249 1	kilopascals (kPa)
Pounds/sq. in.	6.895	kilopascals
ENERGY OR WORK		
BTU	1 055	joules (J)
Foot-pound	1.355 8	joules
Kilowatt-hour	3 600 000 or 3.6 x 10^6	joules (J * one W)
LIGHT		
Foot candle	1.076 4	lumens/meter^2 (lm/m^2)
FUEL PERFORMANCE		
Miles/gal	0.425 1	kilometers/liter (km/l)
Gal/mile	2.352 7	liter/kilometer (l/km)
VELOCITY		
Miles/hour	1.609 3	kilometers/hr. (km/h)

Figure 22—Metric-English Conversion Table

B5497

DECIMAL AND METRIC EQUIVALENTS

Fractions	Decimal In.	Metric MM.	Fractions	Decimal In.	Metric MM.
1/64	.015625	.39688	33/64	.515625	13.09687
1/32	.03125	.79375	17/32	.53125	13.49375
3/64	.046875	1.19062	35/64	.546875	13.89062
1/16	.0625	1.58750	9/16	.5625	14.28750
5/64	.078125	1.98437	37/64	.578125	14.68437
3/32	.09375	2.38125	19/32	.59375	15.08125
7/64	.109375	2.77812	39/64	.609375	15.47812
1/8	.125	3.1750	5/8	.625	15.87500
9/64	.140625	3.57187	41/64	.640625	16.27187
5/32	.15625	3.96875	21/32	.65625	16.66875
11/64	.171875	4.36562	43/64	.671875	17.06562
3/16	.1875	4.76250	11/16	.6875	17.46250
13/64	.203125	5.15937	45/64	.703125	17.85937
7/32	.21875	5.55625	23/32	.71875	18.25625
15/64	.234375	5.95312	47/64	.734375	18.65312
1/4	.250	6.3500	3/4	.750	19.05000
17/64	.265625	6.74687	49/64	.765625	19.44687
9/32	.28125	7.14375	25/32	.78125	19.84375
19/64	.296875	7.54062	51/64	.796875	20.24062
5/16	.3125	7.93750	13/16	.8125	20.63750
21/64	.328125	8.33437	53/64	.828125	21.03437
11/32	.34375	8.73125	27/32	.84375	21.43125
23/64	.359375	9.12812	55/64	.859375	21.82812
3/8	.375	9.52500	7/8	.875	22.22500
25/64	.390625	9.92187	57/64	.890625	22.62187
13/32	.40625	10.31875	29/32	.90625	23.01875
27/64	.421875	10.71562	59/64	.921875	23.41562
7/16	.4375	11.11250	15/16	.9375	23.81250
29/64	.453125	11.50937	61/64	.953125	24.20937
15/32	.46875	11.90625	31.32	.96875	24.60625
31/64	.484375	12.30312	63/64	.984375	25.00312
1/2	.500	12.70000	1	1.00	25.40000

B5496

Figure 23—Decimal and Metric Equivalents

COMMON AUTOMOTIVE ABBREVIATIONS

AC—Alternating Current
A/C—Air Conditioning
ACCEL—Accelerator
ADJ—Adjust
A/F—Air Fuel Ratio
AIR—Air Injection Reaction System
ALDL—Assembly Line Diagnostic Link
Alt—Altitude
AMP—Ampere(s)
ANT—Antenna
APS—Absolute Pressure Sensor
ASM—Assembly
AT—Automatic Transmission
ATDC—After Top Dead Center
Auto—Automatic
BARO—Barometric
Bat—Battery
Bat +—Battery Positive Terminal
BP—Back Pressure
BTDC—Before Top Dead Center
°C—Degrees Celsius
Calif—California
Cat. Conv—Catalytic Converter
CCC—Computer Command Control
CCOT—Cycling Clutch Orifice Tube
CID—Cubic Inch Displacement
CL—Closed Loop
CO—Carbon Monoxide
Coax—Coaxial
Conn—Connector
Conv—Converter
CP—Canister Purge
CPS—Central Power Supply
Crank—Crankshaft
CTS—Coolant Temperature Sensor
CV—Constant Velocity
Cyl—Cylinder(s)
C3I—Computer Controlled Ignition
DBM—Dual Bed Monolith
DC—Direct Current
Diff—Differential
DIS—Direct Ignition System
Dist—Distributor
DVM—Digital Voltmeter (10 meg.)
EAC—Electric Air Control
EAS—Electric Air Switching
ECM—Electronic Control Module
ECU—Engine Calibration Unit (PROM)
EECS—Evaporative Emission Control System
EFE—Early Fuel Evaporation
EFI—Electronic Fuel Injection
EGR—Exhaust Gas Recirculation
ESC—Electronic Spark Control
EST—Electronic Spark Timing
ETR—Electronically Tuned Receiver
EVRV—Electronic Vacuum Regulator Valve
EXH—Exhaust
°F—Degrees Fahrenheit
FED—Federal (All States Except Calif.)
GAL—Gallon
Gen—Generator
Gov—Governor
g—gram
Harn—Harness
HC—Hydrocarbons
HD—Heavy Duty
HEI—High Energy Ignition
Hg—Mercury
Hi. Alt—High Altitude
IAC—Idle Air Control
IC—Integrated Circuit
ID—Identification or Inside Diameter
IGN—Ignition
ILC—Idle Load Compensator
INJ—Injection
IP—Instrument Panel
IPC—Instrument Panel Cluster
INT—Intake
km—kilometer
km/h—Kilometer per hour
kPa—KiloPascals
KV—Kilovolts (thousands of volts)
L—Liter
L4—Four Cylinder In-Line engine
MAF—Mass Air Flow
MAN—Manual
MAP—Manifold Absolute Pressure
MAT—Manifold Air Temperature
Max—Maximum
M/C—Mixture Control
Min—Minimum
mm—millimeter
MPG—Miles Per Gallon
MPH—Miles Per Hour
MV—MilliVolt
NC—Normally Closed
N.m--Newton Meters
NO-Normally Open
NOx—Nitrogen, Oxides of
OD—Outside Diameter
OL—Open Loop
PAIR—Pulse Air Injection Reaction System
P/B—Power Brakes
PCV—Positive Crankcase Ventilation
PRESS—Pressure
PROM—Programmable Read Only Memory
P/S—Power Steering
psi—Pounds per Square Inch
Pt—Pint
PTO—Power Takeoff
Qt—Quart
REF—Reference
RFI—Radio Frequency Interference
RPM—Revolutions per Minute
RPO—Regular Production Option
RTV—Room Temperature Vulcanizing
RVB—Rear Vacuum Break
RVR—Response Vacuum Reducer
SAE—Society of Automotive Engineers
Sec—Secondary
SES—Service Engine Soon
SI—System International
Sol—Solenoid
SPEC—Specification
Speedo-Speedometer
Tach—Tachometer
TBI—Throttle Body Injection

TCC—Transmission Converter Clutch
TDC—Top Dead Center
Term—Terminal
THERMAC—Thermostatic Air Cleaner
TEMP—Temperature
TPS—Throttle Position Sensor
TRANS—Transmission
TV—Throttle Valve
TVRS—Television & Radio Suppression
TVS—Thermal Vacuum Switch
U-Joint—Universal Joint
V—Volt(s)
VAC—Vacuum
VIN—Vehicle Identification Number
VIR—Valve in Receiver
VRV—Vacuum Reducer Valve
VSS—Vehicle Speed Sensor
w/—With
W/B—Wheel Base
w/o—Without
WOT—Wide Open Throttle

REPLACEMENT LABELS

Replacement labels are available through GM Service Parts Operations (SPO) for the following:

- Vehicle Emission Control Information (Exhaust Emission Tune-Up)
- Spare Wheel Caution
- Jacking

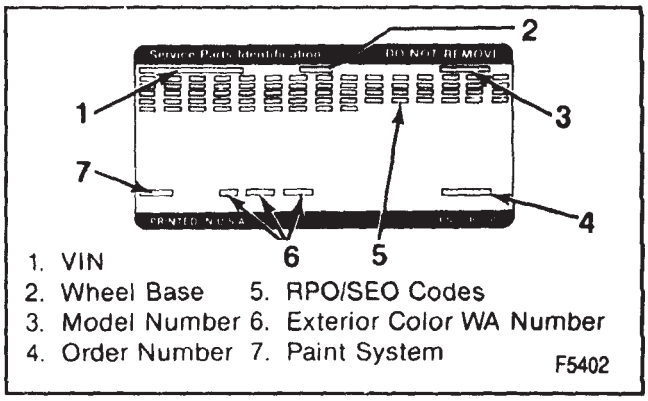

Figure 24—Service Parts Identification Label

- Spare Tire Storage
- Serpentine Belt Routing
- Engine Fan Caution

These and other labels will be found in the Standard Parts Catalog.

The Vehicle Certification Label, Tire Pressure Placard and Service Parts Identification Label are **NOT** available as service parts.

SERVICE PARTS IDENTIFICATION LABEL

The Service Parts Identification Label has been developed and placed on the vehicle to aid service and parts personnel in identifying parts and options originally installed on the vehicle (figure 24).

RPO CODE LISTING (REGULAR PRODUCTION OPTION)

The RPO list contains regular production options used on S/T truck models. Refer to the service parts identification label for a list of the RPO's used on each specific vehicle.

AA3	Deep Tinted Windows, All Except W/S, F.D. and R/END DR.
AD3	Sunroof
AD5	Sliding Side Quarter Window
AJ1	Windows Deep Tint, All Except W/S and DRS
AJ2	Rear Folding Jump Seat
AM7	Rear Folding Seat
AN7	Air Deflector and Fog Lamp Package
AU3	Lock - Side Door Electric
AV5	Seat - High Back Bucket
AX3	Keyless Entry Lock System
A20	Swing-Out Rear Quarter Vent Window
A28	Sliding Rear Window
A31	Window - Power Operated, Front Side Doors
A52	Front Bench Seat
A78	Adjuster - Seat Back, Manual, Passenger and Driver Reclining
BG9	Covering - Floor Rubber
B30	Covering - Floor Carpet
B32	Floor Mats - Front
B33	Floor Mats - Rear
B74	Molding - Wide Wheel Opening
B96	Ornamentation - Extra Molding, Wheel Openings
C25	Wiper System, Rear Window
C42	Heater - Deluxe Outside Air
C5A	4900 Lbs. GVW Rating
C5D	4600 Lbs. GVW Rating
C5T	4200 Lbs. GVW Rating
C5X	4650 Lbs. GVW Rating
C51	Rear Window Air Deflector
C6F	5150 Lbs. GVW Rating
C6H	4350 Lbs. GVW Rating
C6I	4850 Lbs. GVW Rating
C6J	5100 Lbs. GVW Rating
C60	Air Conditioner - Front Manual Controls
C7Y	4700 Lbs. GVW Rating
DC4	Mirror, I/S R/V Tilt, w/Dual Reading Lamps
D34	Mirror - Inside Sunshade
D44	Mirror - Painted Outsude
D48	Mirror - Outside Electric Remote Control
D55	Front Floor Console
D64	Visor Vanity Mirror (RH) - Lighted
D74	Visor Vanity Mirror (LH) - Lighted
D96	Body Stripe - Side, Upper
D98	Stripe, Accent
E55	End Gate - Suburban
E63	Pickup Box - Fleetside
FF4	Arm, Torsion Bar Spring Adj.,(LH)

FF5	Arm, Torsion Bar Spring Adj.,(RH)
FK2	Arm, Torsion Bar Spring Adj.,(LH)
FK3	Arm, Torsion Bar Spring Adj.,(RH)
F51	Heavy Duty Shock Absorbers, Frt. and Rear
F60	Front Spring, Heavy Duty
GQ1	Rear Axle - Base Ratio
GT4	Rear Axle - 3.73 Ratio
GU2	Rear Axle - 2.73 Ratio
GU4	Rear Axle - 3.08 Ratio
GU6	Rear Axle - 3.42 Ratio
G51	Heavy Duty Rear Springs, Variation 2
G80	Rear Axle - Positraction Limited Slip
H04	Rear Axle, 4.11 Ratio Single Speed
JM3	Brake Booster, 240MM, Tandem High Flow
JM5	Brake Booster, 200MM, Tandem High Flow
JM7	Brake Booster, Hyd. Hi-Perf., Delco-Moraine
KC4	Cooler System - Engine Oil
K05	Heater - Engine Block
K34	Cruise Control - Automatic, Electronic
LB4	Engine - 4.3L EFI V6, Gasoline
LL2	Engine - 2.8L EFI V6, Gasoline
L35	Engine - 4.3L CPI V6, Gasoline
L38	Engine - 2.5L (151 EFI) HO L4 Gasoline
MD8	Hydra-Matic 4L60 4-Speed Automatic Transmission
MM5	5 Speed Manual Transmission, Provisions
MW1	Borg Warner T-5 5 Speed Manual Transmission
MX0	Automatic Transmission, Provisions
MY2	New Venture Gear 5LM60 5 Speed Manual Transmission
NA5	Emission System - Federal Requirements
NA6	Emission System - High Altitude Requirements
NB2	Emission System - California Requirements
NM8	Leaded Fuel System
NP1	Transfer Case, Electronic Shift Two-Speed
NP5	Steering Wheel, Leather Wrapped
NQE	Fuel Tank, 20 Gallon Single
N40	Steering - Saginaw Hydraulic (Variable)
N51	Steering - Manual
N60	Aluminum Painted Wheel
N90	Wheel, 15 x 7, Aluminum Cast
PC1	Wheel, 14 x 6, Steel
PC4	Wheel, 14 x 6, Styled
PG1	Wheel, 15 x 6, Steel
PH1	Wheel, 15 x 7, Steel
PNV	Outside Spare Tire Carrier
P06	Wheel Trim Rings
P16	Rear Mounted Spare Tire Carrier
P17	Spare Tire Cover
P41	Tires, EEC Special Side Wall
TR9	Lamp Group, Auxiliary Lighting
T63	Headlamp Warning System
UA1	Heavy Duty Battery, Wet
UD4	Vehicle Speed Alarm, 120 K/H
UL2	European Radio Frequencies
UL5	Radio Delete
UM6	Radio - AM/FM Stereo, Seek,and Scan Auto Reverse Cassette, Clock, ETR
UM7	Radio - AM/FM Stereo,Seek/Scan, Clock, ETR
UP7	Provisions for Mono Radio
UP8	Provisions for Stereo Radio
UT5	ETR AM, Clock Radio
UX1	Radio - AM/FM Stereo, Seek and Scan, Auto Reverse Search Repeat Cassette Equalizer, Clock, ETR
UY7	Heavy Duty Trailer Wiring Harness. Requires Z82
U1C	Radio - AM/FM Stereo, Seek and Scan, Compact Disc, Clock, ETR
U18	Kilometer Instrument Cluster
U26	Lamp, Engine Compartment Courtesy
U28	Lamp, Ashtray Courtesy
U52	Electronic Instrument Cluster
U73	Fixed Mast Antenna
U89	Wiring Harness - Trailer
VF6	Rear Step Bumper
VR2	Trailer Hitch - Factory Installed
VR4	Trailer Hitch - Weight Distributing Platform
V01	Radiator - Heavy Duty
V02	Radiator - Heavy Duty w/Trans. Oil Cooler
V10	Provisions Option - Cold Climate
V54	Roof Luggage Carrier, Painted
YC1	High Sierra Equipment
YC2	Sierra Classic Equipment
YC3	Gypsy Equipment
ZAA	Compact Spare Tire
ZK4	Full Size Spare Tire
ZL1	Noise Level Control with less than 8,000 lb. GVW
ZM4	Luggage Carrier/Rear Air Deflector Package
ZM5	Underbody Shield Package
ZM6	Off-Road Suspension Package
ZM7	Combination Package, Intermitt. Wipers/Tilt Wheel
ZM8	Combination Package, Elect. Rear Tailgate Release/ Rear Window Defogger
ZQ2	Driver Convenience Package
ZQ8	Sport Chassis Package
ZY1	Color Combination - Solid
ZY2	Color Combination - Two Tone
ZY3	Special Two Tone Paint
ZY4	Color Combination - Deluxe Two Tone
Z49	Canadian Mandatory Base Equipment
Z70	Conversion Package, Oldsmobile
Z72	Trailering Package - Light Duty, Ball Type Hitch
Z82	Trailering Special - Reese Type Hitch
01L	Special Paint - Secondary
01U	Special Paint - Primary
12L	Secondary Color, Exterior - Yellow White
12U	Primary Color, Exterior - Yellow White
13D	Trim Combination - Cloth, Lt. Gray
13E	Interior Trim - Cloth, Lt. Smoke Gray
13I	Interior Trim, Lt. Smoke Gray
13W	Trim Combination - Vinyl, Lt. Gray
17A	Stripe Accent - Silver
17L	Secondary Color, Exterior - Lt. Slate Metallic
18B	Trim Combination - Cloth, Charcoal

18D	Trim Combination - Cloth, Dark Charcoal
18E	Trim Combination - Cloth, Dark Charcoal
18I	Interior Trim - Dark Charcoal
18W	Trim Combination - Vinyl, Dark Charcoal
182	Trim Combination - Leather, Dark Charcoal
19L	Secondary Color, Exterior - Lamp Black
19U	Primary Color, Exterior - Lamp Black
24B	Trim Combination - Cloth, Dark Blue
24D	Trim Combination - Cloth, Dark Blue
24E	Trim Combination - Cloth, Dark Blue
24I	Interior Trim - Dark Blue
24L	Secondary Color, Exterior - Medium Blue Metallic
24U	Primary Color, Exterior - Medium Blue Metallic
24W	Interior Trim - Vinyl, Dark Blue
25L	Secondary Color, Exterior - Bright Teal
25U	Primary Color, Exterior - Bright Teal
26L	Secondary Color, Exterior - Pastel Blue
26U	Primary Color, Exterior - Pastel Blue
28A	Stripe Accent - Dark Blue Metallic
29A	Stripe Color Accent - Blue Mica
31A	Stripe Color Accent - Two Tone, Mint Green Mica
37U	Primary Color, Exterior - Lt. Brown
40A	Stripe Color Accent - White
41A	Stripe Accent - Two Tone, Lt. Huron Blue/Black Saphire Met.
43A	Accent Stripe - Medium Green
43L	Secondary Color, Exterior - Seafoam Green
43U	Primary Color, Exterior - Seafoam Green
45A	Stripe Color Accent - Bright Teal
47B	Trim Combination - Cloth, Dark Red
47D	Trim Combination - Cloth, Dark Red
47E	Trim Combination - Cloth, Dark Red
47I	Interior Trim - Dark Red
47L	Secondary Color, Exterior - Dark Blue Metallic
47U	Primary Color, Exterior - Dark Blue Metallic
47W	Trim Conmbination - Vinyl, Dark Red
48L	Secondary Color, Exterior - Dark Red
48U	Primary Color, Exterior - Dark Red
6M1	Outside Rear View Mirrors, White
6M9	Deletion, Spare Tire and Wheel
64B	Trim Combination - Cloth, Light Beige
64I	Interior Trim - Light Beige
642	Trim Combination - Leather, Light Beige
72L	Secondary Color, Exterior - Standard Red
72U	Primary Color, Exterior - Standard Red
75A	Stripe Color Accent, Red
78A	Stripe Color Accent - Two-Tone, Red/Dk.Red
81A	Stripe Color Accent - Two-Tone, Dk.Red/Black
90L	Secondary Color, Exterior - Gray Metallic
90U	Primary Color, Exterior - Gray Metallic

SECTION 0B

MAINTENANCE AND LUBRICATION

CONTENTS

SUBJECT	PAGE
Scheduled Maintenance Services	0B-1
Normal Vehicle Use	0B-1
Maintenance Schedule 1	0B-1
Maintenance Schedule 2	0B-1
Explanation of Scheduled Maintenance Services	0B-1
Engine Oil and Filter Change	0B-4
Chassis Lubrication	0B-4
EGR System Service	0B-4
Approximate Fluid Capacities	0B-6
Tire Pressure Specifications	0B-6
Maintenance Items	0B-6

SCHEDULED MAINTENANCE SERVICES

NORMAL VEHICLE USE

The maintenance instructions contained in the Maintenance Schedule are based on the assumption that the vehicle will be used as designed:

- To carry passengers and cargo within the limitation indicated on the vehicle certification label located on the edge of the driver's door.
- On reasonable road surfaces within legal operating limits.
- On unleaded gasoline.

MAINTENANCE SCHEDULE 1

Follow Maintenance Schedule 1 if the vehicle is operated under one or more of the following conditions:

- When most trips are less than 4 miles (6 km).
- Operating when outside temperatures remain below freezing and when most trips are less than 10 miles (16 km).
- When most trips include extended idling and/or frequent low-speed operation as in stop-and-go traffic.
- Towing a trailer.
- Operating in dusty areas.

Maintenance Schedule 1 should also be followed if the vehicle is used in delivery service or other commercial applications.

MAINTENANCE SCHEDULE 2

Follow Maintenance Schedule 2 only if none of the driving conditions specified in Maintenance Schedule 1 apply.

EXPLANATION OF SCHEDULED MAINTENANCE SERVICES

Refer to figures 1 and 2 for the schedules of time and/or mileage intervals.

SCHEDULED MAINTENANCE SERVICES FOR MAINTENANCE SCHEDULE I

Item No.	If your driving conditions meet those specified on page 7-3, use Maintenance Schedule I (+).																									
	Service	Miles (000)	3	6	7.5	9	12	15	18	21	22.5	24	27	30	33	36	37.5	39	42	45	48	51	52.5	54	57	60
		Kilometers (000)	5	10	12.5	15	20	25	30	35	37.5	40	45	50	55	60	62.5	65	70	75	80	85	87.5	90	95	100
1	Engine Oil Change* —Every 3 Months, or		+	+		+	+	+	+	+		+	+	+	+	+		+	+	+	+	+		+	+	+
	Oil Filter Change* —Every 3 Months, or		+	+		+	+	+	+	+		+	+	+	+	+		+	+	+	+	+		+	+	+
2	Chassis Lubrication—Every 12 Months, or		+	+		+	+	+	+	+		+	+	+	+	+		+	+	+	+	+		+	+	+
3	Clutch Fork Ball Stud Lubrication													+												+
4	Cooling System Service*—Every 24 Months or													+												+
5	Air Cleaner Element Replacement*													+												+
6	Front Wheel Bearing Repack (2WD Only)							+						+						+						+
7	Transmission Service—See page 7-9																									
8	Fuel Filter Replacement*													+												+
9	Spark Plugs Replacement*													+												+
10	Spark Plug Wire Inspection*																									+
11	Engine Timing Check*																									+
12	Fuel Tank, Cap and Lines Inspection*																									+
13	Engine Accessory Drive Belt(s) Inspection*																									+
14	Tire and Wheel Rotation			+						+						+						+				
15	Drive Axle Service		+	+		+	+	+	+	+		+	+	+	+	+		+	+	+	+	+		+	+	+
16	Brake Systems Inspection—See page 7-10																									

FOOTNOTES:
*An Emission Control Service

T0283

THE SERVICES SHOWN ON THIS CHART UP TO 60,000 MILES (100 000 km) ARE TO BE DONE AFTER 60,000 MILES AT THE SAME INTERVALS.

T0284

SCHEDULED MAINTENANCE SERVICES FOR MAINTENANCE SCHEDULE II

Item No.	If your driving conditions meet those specified on page 7-3, use Maintenance Schedule II (•).																									
	Service	Miles (000)	3	6	7.5	9	12	15	18	21	22.5	24	27	30	33	36	37.5	39	42	45	48	51	52.5	54	57	60
		Kilometers (000)	5	10	12.5	15	20	25	30	35	37.5	40	45	50	55	60	62.5	65	70	75	80	85	87.5	90	95	100
1	Engine Oil Change* —Every 12 Months, or				•			•			•			•			•			•			•			
	Oil Filter Change* —Every 12 Months, or				•						•															
2	Chassis Lubrication—Every 12 Months, or				•			•			•			•			•			•			•			•
3	Clutch Fork Ball Stud Lubrication													•												•
4	Cooling System Service*—Every 24 Months or													•												•
5	Air Cleaner Element Replacement*													•												•
6	Front Wheel Bearing Repack (2WD Only)													•												•
7	Transmission Service—See page 7-9																									
8	Fuel Filter Replacement*																									•
9	Spark Plugs Replacement*													•												•
10	Spark Plug Wire Inspection*																									•
11	Engine Timing Check*																									•
12	Fuel Tank, Cap and Lines Inspection*																									•
13	Engine Accessory Drive Belt(s) Inspection*																									•
14	Tire and Wheel Rotation				•						•						•						•			
15	Drive Axle Service				•			•			•			•			•			•			•			•
16	Brake Systems Inspection—See page 7-10																									

FOOTNOTES:
*An Emission Control Service

T0287

THE SERVICES SHOWN ON THIS CHART UP TO 60,000 MILES (100 000 km) ARE TO BE DONE AFTER 60,000 MILES AT THE SAME INTERVALS.

T0288

ENGINE OIL AND FILTER CHANGE

ALWAYS USE "SG" QUALITY ENERGY CONSERVING II OILS OF PROPER VISCOSITY.

The "SG" designation may be shown alone or in combination with other designations such as SG/CC, SG/CD, SF, SG, CC, etc.

Oil Filter

NOTICE: To prevent leakage of small 75-mm oil filters such as PF-47, PF-51, etc., it is very important that the installation instructions listed below are closely followed.

Remove the old filter by turning counterclockwise. Clean the gasket sealing area on the engine oil filter mounting surface. (If the engine has an adapter base, make sure threaded nipple or bolt is properly torqued.).

Lightly oil gasket with clean oil and install filter. After the oil filter gasket contacts the oil filter mounting surface, tighten 3/4 to 1 full turn. When necessary, use a cap-type wrench, strap-type wrench with handle, or equivalent, to insure proper installation.

With engine oil at proper level, run engine three minutes and thoroughly check filter area for leaks.

Engine Oil Viscosity

Engine oil viscosity (thickness) has an effect on fuel economy and cold-weather operation (starting and oil flow). Lower viscosity engine oils can provide better fuel economy and cold weather performance; however, higher temperature weather conditions require higher viscosity engine oils for satisfactory lubrication.

NOTICE: Using oils of any viscosity other than those viscosities recommended could result in engine damage.

When choosing an oil, consider the range of temperatures the vehicle will be operated in before the next oil change. Then, select the recommended oil viscosity (figures 3 and 4).

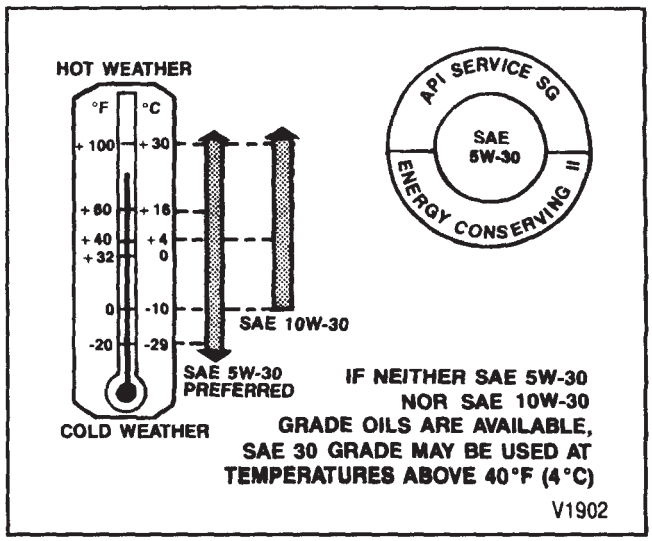

Figure 3—Engine Oil Viscosity Recommendation

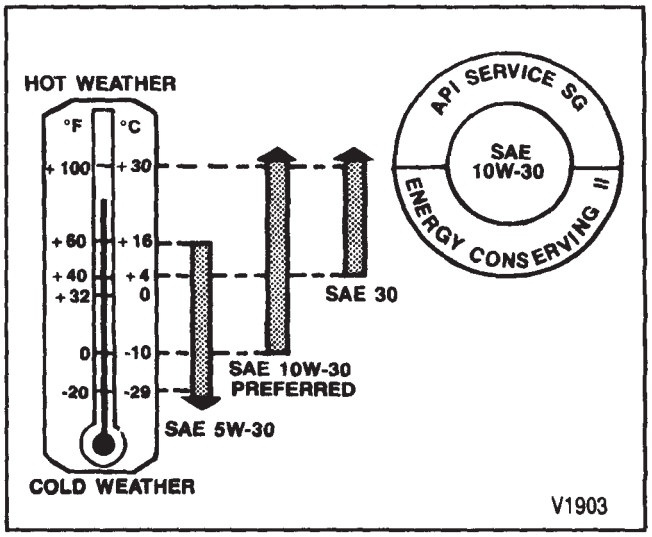

Figure 4—Engine Oil Viscosity Recommendation

CHASSIS LUBRICATION

Lubricate transmission shift linkage, parking brake cable guides, underbody contact points and linkage (figure 5).

NOTICE: Do not lubricate the parking brake cables. Lubrication destroys the plastic coating on the cables.

Wipe off all dirt from the grease fitting before lubricating the joint. Ball joints should not be lubricated unless their temperature is -12°C (10°F) or higher. During cold weather, the ball joint should be allowed to warm-up as necessary before being lubricated. Use a low-pressure grease gun on all joints to prevent seal damage.

EGR SYSTEM SERVICE

Perform "EGR System Check." Refer to the 1992 Light Duty Fuel and Emissions Manual if you are using X-9229 and to the Fuel and Emissions section at the rear of this manual if you are using ST-369-92.

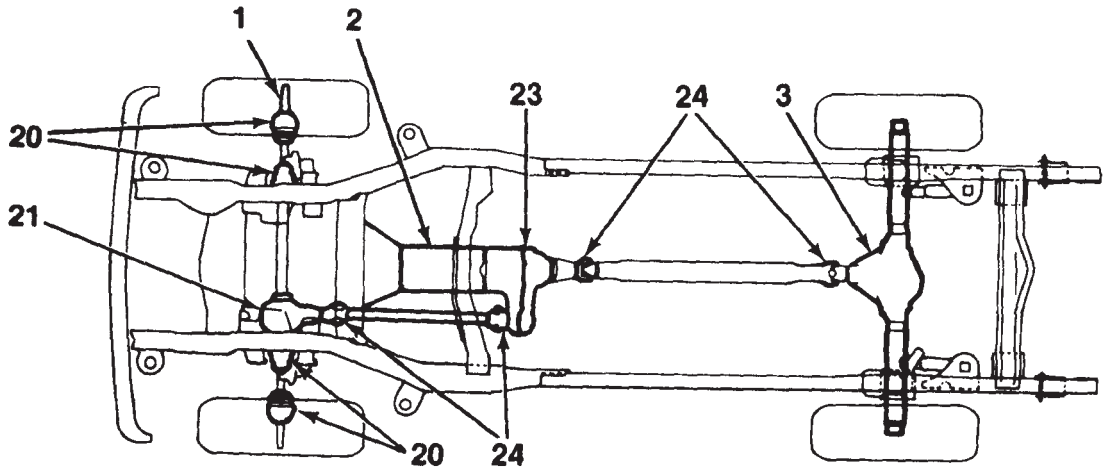

Lubrication Points
1. Wheel Bearings
2. Transmission
3. Rear Axle
20. CV Joints
21. Front Differential
23. Transfer Case
24. Universal Joints

Lubrication Points (Not Shown)
4. Brake Master Cylinder
5. Parking Brake Linkage
6. Accelerator Linkage
7. Hood Latch
8. Hood and Door Hinges

F2948

Figure 5—Lubrication Points

APPROXIMATE FLUID CAPACITIES

	LITERS	QUARTS
Engine Cooling System		
2.5L (VIN A)	11.0	11.5
2.8L (VIN R)	10.0	10.5
4.3L (VIN Z)	11.5	12.1
4.3L (VIN W)	11.5	12.1
Engine Crankcase		
2.5L (VIN A)	3.31	3.5
2.8L (VIN R)	3.78	4.0
4.3L (VIN Z and W)	3.78	4.0
Fuel Tank		
Standard	76.0	20*
Transmission		
4L60 Automatic — Drain and Refill	4.7	5
After Complete Overhaul	10.6	11
Borg Warner T5 Manual Transmission	2.0	2.2
New Venture Gear 5LM60 Manual Transmission	2.0	2.2
Transfer Case		
New Process 231	1.0	2.2**
New Process 233	1.0	2.2**

*Gallons **Pints

T2725

TIRE PRESSURE SPECIFICATIONS

	kPa	PSI
P195/75R14	240	35
P205/75R14	240	35
P195/75R15	240	35
P205/75R15	240	35
P215/65R15	240	35
P235/75R15	240	35
T135/80D15	415	60

MAINTENANCE ITEMS

Air Cleaner	
2.5L (VIN A)	AC Type A785C
2.8L (VIN R)	AC Type A773C
4.3L (VIN Z and W)	AC Type A773C
Engine Oil Filter	
2.5L (VIN A)	AC Type PF-47
2.8L (VIN R)	AC Type PF-51 (2WD) AC Type PF-52 (4WD)
4.3L (VIN Z and W)	AC Type PF-15
PCV Valve	
2.5L (VIN A)	AC Type CV895C
2.8L (VIN R)	AC Type CV789C
4.3L (VIN Z and W)	AC Type CV789C
Spark Plugs and Gap	
2.5L (VIN A)	AC Type R43CTS6 (1.52mm, .060")
2.8L (VIN R)	AC Type R43TSK (1.14mm, .045")
4.3L (VIN Z)	AC Type CR43TS (.90mm, . 035")
4.3L (VIN W)	AC Type CR43TS (1.14mm, .045")
Fuel Filter	AC Type GF-481

T2726

SECTION 0C

VIBRATION DIAGNOSIS

NOTICE: When fasteners are removed, always reinstall them at the same location from which they were removed. If a fastener needs to be replaced, use the correct part number fastener for that application. If the correct part number fastener is not available, a fastener of equal size and strength (or stronger) may be used. Fasteners that are not reused, and those requiring thread locking compound will be called out. The correct torque value must be used when installing fasteners that require it. If the above conditions are not followed, parts or system damage could result.

CONTENTS

SUBJECT	PAGE
Vibration Diagnosis	0C- 1
General Description	0C- 1
Vibration Categories	0C- 1
Vibration Classes	0C- 2
Orders of Vibration	0C- 2
Road Testing	0C- 2
Reed Tachometer	0C- 3
Tire Speed Chart	0C- 6
On-Vehicle Service	0C- 6
Balancing Tires and Wheels	0C- 6
Wheel Runout	0C- 7
Tire/Wheel Assembly Runout	0C- 7
Correcting Non-Uniform Tires	0C- 8
Hub and Axle Shaft Stud Runout	0C- 8
Propeller Shaft	0C- 8
Propeller Shaft Runout Check	0C- 8
Propeller Shaft Balance Check	0C- 9
Propeller Shaft Balancing	0C-10
Propeller Shaft Phasing	0C-12
Driveline Angles	0C-12
Vibration Diagnosis Charts	0C-14
Special Tools	0C-23

VIBRATION DIAGNOSIS

GENERAL DESCRIPTION

Vibration is a back and forth oscillation that can be seen, heard, or felt. A vehicle imbalance or misalignment is usually the cause of a vibration.

PATH, SOURCE, AND RESPONDER

In many cases the vibration that is being seen, heard, or felt as the disturbance to the observer is not the source but the responder (figure 1). Many times the vibration's severity will depend on how it is transmitted through the vehicle.

VIBRATION CATEGORIES

There are several excitation sources and many responding systems which may cause a vibration complaint. Most vibrations are caused by wheel and tire disturbances or driveline imbalances. Each of these categories has a specific vibration associated with it. By systematically classifying the vibration into one of the following categories you can eliminate many components.

VEHICLE SPEED SENSITIVE

Most vibration complaints will be found to be vehicle speed sensitive: The frequency of the excitation depends only on the speed of the vehicle.

Vehicle speed sensitivity can be determined as follows:

1. Drive the vehicle in high gear and locate the vibration problem. Record the vehicle speed and the engine rpm at which the problem occurs.
2. Shift the vehicle into a lower gear and again locate the vibration problem. Record the vehicle speed and the engine rpm at which the problem occurs.

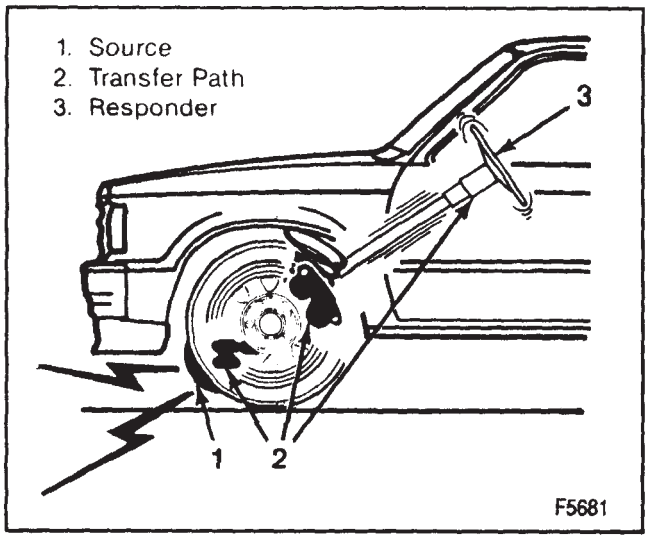

Figure 1—Vibration Source, Path, Responder

3. If the problem occurs at the same vehicle speed as when the vehicle was in high gear, the vibration is vehicle speed sensitive.

ENGINE SPEED SENSITIVE

Another group of vibration complaints will be found to be engine speed sensitive. The frequency of the excitation depends only on the speed of the engine, independent of the speed of the vehicle.

Engine speed sensitivity can be determined as follows:

1. Drive the vehicle in high gear and locate the vibration problem. Record the vehicle speed and the engine rpm at which the problem occurs.
2. Shift the vehicle into a lower gear and again locate the vibration problem. Record the vehicle speed and the rpm at which the problem occurs.
3. Do a neutral run-up test in the stall.
4. If the problem occurs at the same engine rpm as when the vehicle was in high gear, the vibration is engine speed sensitive.

PAYLOAD OR JOUNCE SENSITIVE

A payload or jounce sensitive problem is one which varies in intensity as the height of the vehicle changes with respect to the surface of the road. The intensity varies as the springs are extended or compressed depending on the vehicle payload.

Payload or jounce sensitivity can be determined as follows:

1. Drive the vehicle and observe the disturbance with different payloads.
2. Drive the vehicle over a road that dips in such a way that it causes the rear of the vehicle to move up and down relative to the surface of the road. Keeping a constant throttle, observe the disturbance.

TORQUE SENSITIVE

A torque sensitive problem is one which increases in intensity as the torque (power) output of the engine increases. The intensity of the vibration increases as the throttle opening is increased.

Torque sensitivity can be determined as follows:

1. Drive the vehicle in high gear and locate the disturbance. Record the vehicle speed and engine rpm at which the problem occurs.
2. Observe the disturbance while varying the throttle position. That is, drive the vehicle with steady throttle, slowly increasing to heavy throttle by going up hill or applying the brakes while increasing the throttle opening and slowly decreasing to minimum throttle by coasting through the disturbance.
3. If the disturbance becomes more severe as the throttle opening is increased, the vibration is torque sensitive. This typically changes the pinion angle.

VIBRATION CLASSES

In the process of classifying vibration problems in terms of these four sensitivity categories, you will find that many problems fit more than one of the categories. Combining these categories into their possible combinations, then, the majority of all vibration problems will fall into one of the following "classes" of categories:

A. Engine Speed Sensitive Only
B. Vehicle Speed Sensitive Only
C. Torque Sensitive and Vehicle Speed Sensitive
D. Torque Sensitive and Engine Speed Sensitive
E. Torque Sensitive and Vehicle Speed Sensitive and Jounce Sensitive

The first step, then, in correcting a vibration problem is to classify it in terms of one or more of the sensitivity categories and, on the basis of the sensitivity(ies) determined, place it in its proper "class," as designated by the letters A through E.

Having placed a given problem in a particular class, and knowing the speed or rpm at which the problem occurs or is most intense, further analysis can be made.

ORDERS OF VIBRATION

Some components may have more than one vibration at a given speed. These multiple vibrations are referred to as the order of a vibration. The order of a vibration refers to the number of disturbances created by one rotation of a component. For example, a tire with one heavy spot will produce one disturbance each rotation - a first order vibration (figure 2). An oval shaped tire will produce two disturbances each rotation - a second order vibration (figure 2).

ROAD TESTING

To help diagnose and isolate the source of a vibration, it is important to road test the vehicle and use a systematic approach in narrowing down the possible causes of a vibration.

- When did the vibration start?
- Did the vibration start after a repair?
  - — Exhaust System
  - — Undercoating
  - — Tire Repair or Replacement
  - — Wheel Alignment
  - — Engine Repair
  - — Etc.

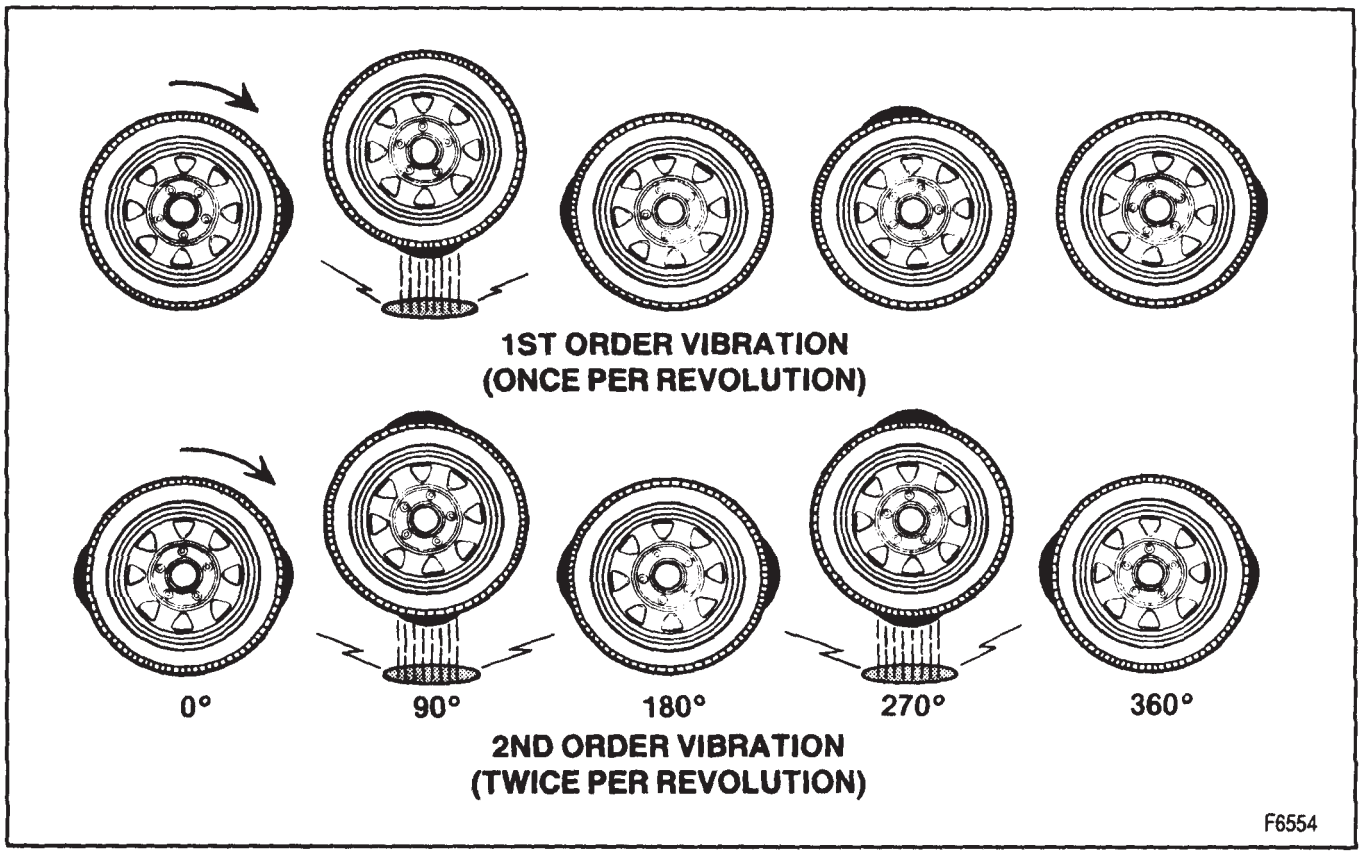

Figure 2—Orders of Vibration

These questions will give you a basic outline and will enable you to eliminate many components and focus attention on only those items that can be responsible for the conditions encountered.

Four major component groups are usually the cause of or are related to vibration. When a technician is road testing a vehicle for vibration, he must remember the four major component groups:

1. Engine and mounts.
2. Transmission and transfer case mounts.
3. Tires, wheels, and brake drums.
4. Propeller shafts front and rear and universal joints.

Before road testing a vehicle, check the following:

1. In or out of phase propeller shaft (front or rear).
2. All fasteners for tightness at universal joints, wheel lugs, engine mounts, and transmission and transfer case mounts.
3. Tire air pressure.
4. Payload conditions.

ROAD TEST (Two-Wheel Drive Vehicles)

A technician should road test the vehicle to diagnose the complaint. Refer to "Reed Tachometer" in this section. Record the speed and rpm at which the greatest vibration occurs. The vibration is likely to be in the steering wheel or in the seat bottom. The road test can be helpful in locating the vibration source.

ROAD TEST (Four-Wheel Drive Vehicles)

If a vibration is sensitive to vehicle speed, try removing either the front or rear propeller shaft and drive the vehicle through the vibration speed range. You may have to install a plug in the opening of the transmission or transfer case output shaft, to keep the oil from leaking out. Refer to PROPELLER SHAFT (SECTION 4A) for removal and reinstallation procedures.

- If the vibration goes away with the propshaft removed, the problem is probably that component.
- If the vibration does not go away, reinstall the propshaft and repeat the road test with the other one removed.
- If removing either propshaft does not eliminate the vibration, it is probably caused by a wheel/tire assembly or related components, (the hub, brake rotors, brake drums, etc).

COAST TEST

Drive the vehicle past the vibration speed, shift into neutral and coast back through the vibration speed. In this test two kinds of vibrations normally occur; a shaking or buzzing. A shaking vibration is usually caused by tires or a wheel and brake drum/disc assembly problem. A buzzing vibration is usually caused by a driveline problem.

REED TACHOMETER

To aid in the diagnosis of vibrations, a reed tachometer can be used to identify the frequency of a rotational component with a repetitive vibration.

The Biddle Frahm Reed Tachometer (or equivalent) measures vibration in cycles per minute (CPM) (figure 3). It consists of two rows of reeds. Each row is

designed to vibrate at a particular frequency.

If you can match the rotational speed of a particular component with the frequency reading of the reed tachometer, you will know in which area to concentrate your efforts.

These frequency relationships exist for all vibrations that occur in a vehicle and understanding these relationships can often solve difficult vibration problems.

REED TACHOMETER USAGE

In truck applications, experience has shown the reed tachometer can be placed on the instrument panel for ease of viewing and for effective pickup of a vibration. However, if a vibration exists and the vibration frequency cannot be read with the reed tachometer on the dash, the reed tachometer can be placed in other locations that may be responding to the source of the vibration. To reduce the effect of road input on the reed tachometer, vehicles should be test driven on a smooth road (preferably asphalt).

One of the more important things to be aware of when using the reed tachometer for the first time is that the reeds are very sensitive and will pick up many low amplitude vibrations (figure 4). These will appear as slight movements of many reeds, and do not correspond to any particular component. Reed movement that corresponds to a vibrating component will be greater in amplitude, traveling the full range of the viewing area.

The following examples illustrate two typical applications of a reed tachometer.

Example 1

Road test reveals low frequency (shake) vibration at 2400 engine rpm with the transmission in direct drive.

Known facts - Reed tachometer frequency reads at 800 cycles per minute (figure 5).

Vibration is vehicle speed sensitive.

Rear end ratio 3.0 to 1.

Calculations - First order of tire and rear end: 2400 rpm

3.0 rear axle ratio = 800 rpm.

First order of propshaft: 2400.

Conclusion - The vibration frequency (800) is related to the first order rotation of the tire/wheel assembly. Given this relationship, you can correct the tire/wheel assembly for a first order disturbance.

Example 2

Road test reveals high frequency vibration at 2400 engine rpm with the transmission in direct drive.

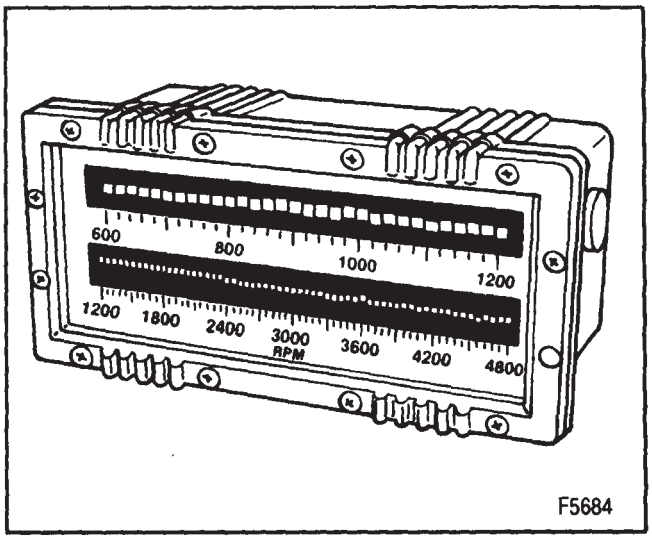

Figure 3—Reed Tachometer

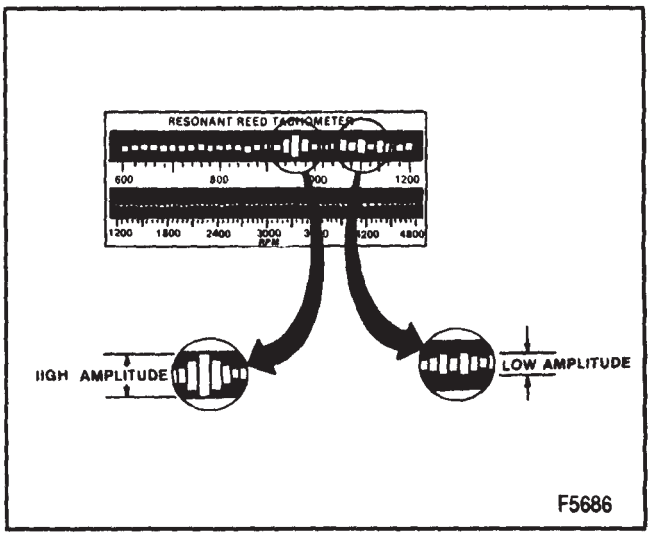

Figure 4—Amplitude

Known facts - Reed tachometer frequency reads at 1600 cycles per minute (figure 6).

Vibration is vehicle speed dependent.

Rear end ratio 3.0 to 1.

Calculations - First order of tire and rear end: 2400 rpm

3.0 rear axle ratio = 800 rpm.

First order of tire and wheel: 800.

Second order of tire and wheel: 800 x 2 = 1600.

Conclusion - The vibration frequency 1600 is related to the second order rotation of the tire and wheel.

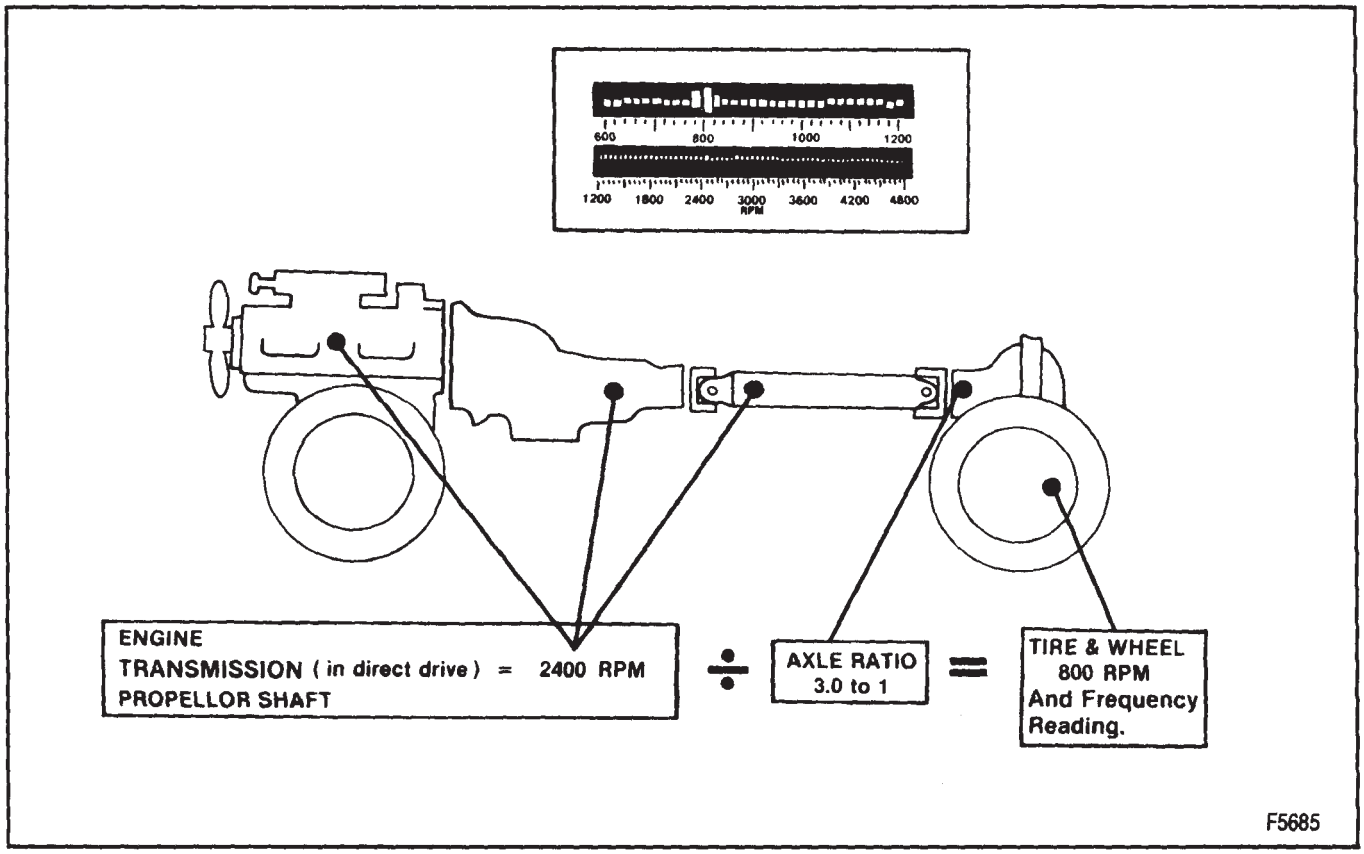

Figure 5—Reed Tachometer 1st Order Vibration

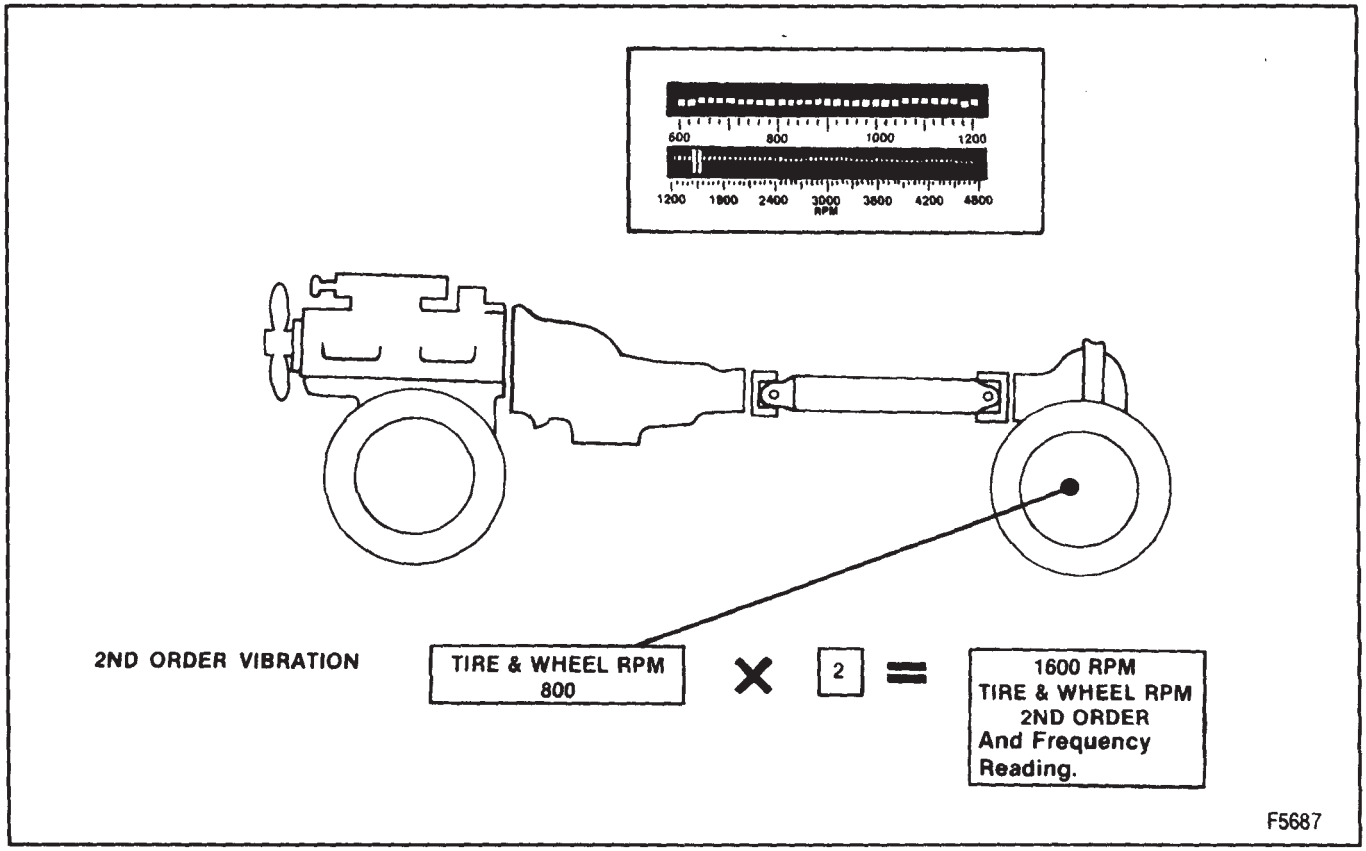

Figure 6—Reed Tachometer 2nd Order Vibration

TIRE SPEED CHART

Tire rpm can be used to calculate engine rpm if no engine tachometer is available when using a reed tachometer for vibration diagnosis. Multiplying tire rpm at a given speed by the axle ratio will given engine rpm. Example: P155/80R13 at 45 mph (72 kmh) does 686 rpm x 3.08 ratio equals 2113 engine rpm.

Tire Size	Tire rpm at 45 mph (72 kmh)	Tire rpm at 50 mph (80 kmh)	Tire rpm at 55 mph (88 kmh)	Tire rpm at 60 mph (96 kmh)	Tire rpm at 65 mph (105 kmh)	Tire rpm at 70 mph (112 kmh)
P195/75R14	610	678	746	814	881	949
P205/75R14	599	666	733	799	866	932
P205/75R15	578	642	706	770	819	899
P215/65R15	599	666	733	799	866	932
P235/75R15	540	600	660	720	780	840

T2727

ON-VEHICLE SERVICE

BALANCING TIRES AND WHEELS

There are two types of tire and wheel balancing, static and dynamic. Static balance is the equal distribution of weight around the wheel. Assemblies that are statically unbalanced cause a bouncing action called wheel tramp (figure 7). This condition will eventually cause uneven tire wear.

Dynamic balance is the equal distribution of weight on each side of the centerline so that when the assembly spins there is no tendency for it to move from side to side (figure 8). Assemblies that are dynamically unbalanced may cause wheel shimmy.

GENERAL BALANCE PRECAUTIONS

Deposits of foreign material must be cleaned from the inside of the wheel. Stones should be removed from the tread in order to avoid operator injury during spin balancing and to obtain a good balance. The tire should be inspected for any damage, then balanced according to the equipment manufacturer's recommendations.

Whenever a heavier, solid locking wheel nut is used to replace a standard nut, it should be installed nearest the valve stem, and a 14-grams (1/2-ounce) balance weight should be added 180 degrees opposite the locking nut on the wheel's inboard side.

When rotating tires, always install the locking nut nearest the tire valve stem so that it remains opposite the balance weight. This procedure will improve the wheel balance by compensating for the heavy locking wheel nut.

OFF-VEHICLE BALANCING

Most electronic off-vehicle balancers are more accurate than the on-vehicle spin balancers. They are easy to use and give a dynamic (two-plane) balance. Although they do not correct for drum or rotor unbalance as does on-vehicle spin balancing, this is overcome by their accuracy. When balancing off-vehicle, the wheel should locate on the balance with a cone through the back side of the center pilot hole (not by the wheel stud holes).

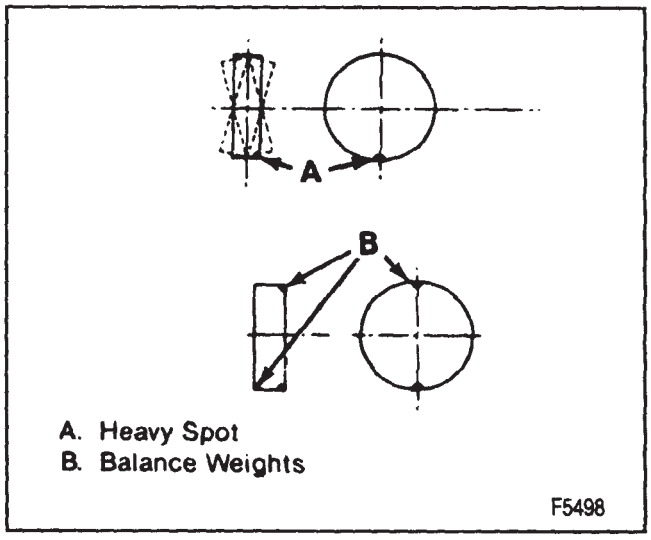

Figure 7—Static Unbalance

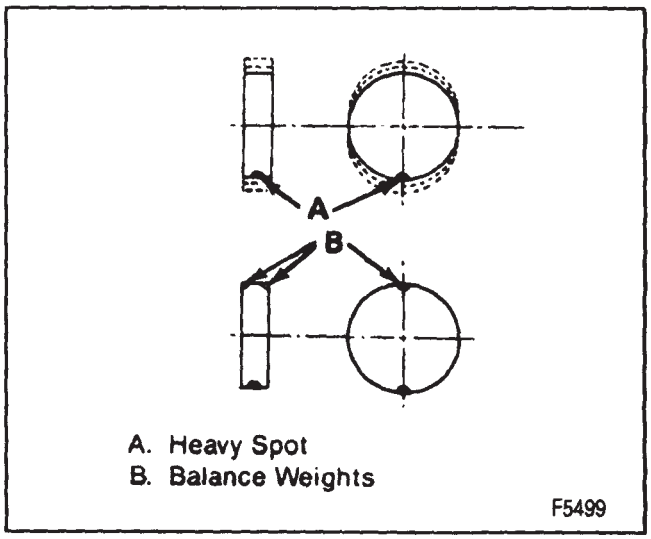

Figure 8—Dynamic Unbalance

ON-VEHICLE BALANCING

When needed, on-vehicle balancing will help correct vibrations due to brake drum, rotor and wheel cover imbalance.

When balancing on-vehicle, remove the balance weights from the off-vehicle dynamic balance. If more than 28 grams (one ounce) of additional weight is required, it should be split between the inner and outer rim flange.

Important

On vehicles equipped with four-wheel drive, the transfer case MUST be in the two-wheel drive position when balancing any of the wheel/tire assemblies.

NOTICE: The driven tire and wheel assemblies should be spun using the engine. Limit speed as stated in the following Caution.

CAUTION: Do not spin the drive wheels faster than 35 mph (55 km/h) as indicated by the speedometer. This limit is necessary because the speedometer indicated only one-half of the actual wheel speed when one drive wheel is spinning and the other drive wheel is stopped. Personal injury and damage may result from high speed spinning.

CAUTION: On vehicles equipped with limited slip rear axles, do not attempt to balance a tire on a drive wheel with the other drive wheel on the ground. The vehicle may drive through this wheel and cause the vehicle to move unexpectedly, resulting in personal injury and property damage.

To distinguish between standard rear axle and a limited slip rear axle, check for Positraction (G80) on Service Parts Identification label.

WHEEL WEIGHTS

If more than 85 grams (3 ounces) are needed, the wheel weights should be split as equal as possible between the inboard and outboard flanges.

Balancing of assemblies with factory aluminum wheels requires the use of special clip-on type wheel weights. These weights are designed to fit over the thicker rim flange of the aluminum wheel.

Adhesive wheel weights are also available. Use the manufacturer's procedure to install adhesive wheel weights.

WHEEL RUNOUT

Wheel runout should be measured with an accurate dial indicator. Measurements may be taken with the wheel installed on or off the vehicle using an accurate mounting surface such as on a wheel balancer. Measurements may also be taken with or without the tire mounted on the wheel.

Radial runout and lateral runout should be measured on both the inboard and outboard rim flanges (figure 9). With the dial indicator firmly in position, slowly rotate the wheel one revolution and record the total indicator reading. If any measurement exceeds specifications, and there is vibration that wheel balancing will not correct, the wheel should be replaced. Disregard any indicator readings due to welds, paint runs, scratches, etc.

- STEEL WHEELS
  Radial runout 0.040"
  Lateral runout 0.045"
- ALUMINUM WHEELS
  Radial runout 0.030"
  Lateral runout 0.030"
- These are the maximum allowable specifications.

TIRE/WHEEL ASSEMBLY RUNOUT

Before measuring the runout of a tire/wheel assembly the vehicle should be driven long enough to warm up the tires. Do this before any measurements are taken, then do the following:

1. Lift the vehicle and support with suitable safety stands.
2. Mark the location of each tire/wheel assembly in relation to the wheel studs and to there position on the vehicle.
3. Install tire/wheel assembly on wheel balancer.
4. Using a dial indicator with a magnetic base and a roller tip, position it on the balancer so the different runout checks can be done (figure 10).
5. DO NOT start the wheel balancer with the dial indicator place. These checks should be done by spinning the tire BY HAND ONLY on the tire balancer.
6. Slowly rotate the assembly one complete turn and "zero" the dial indicator on the low spot.
7. Rotate the assembly one more complete turn and note the amount of runout.

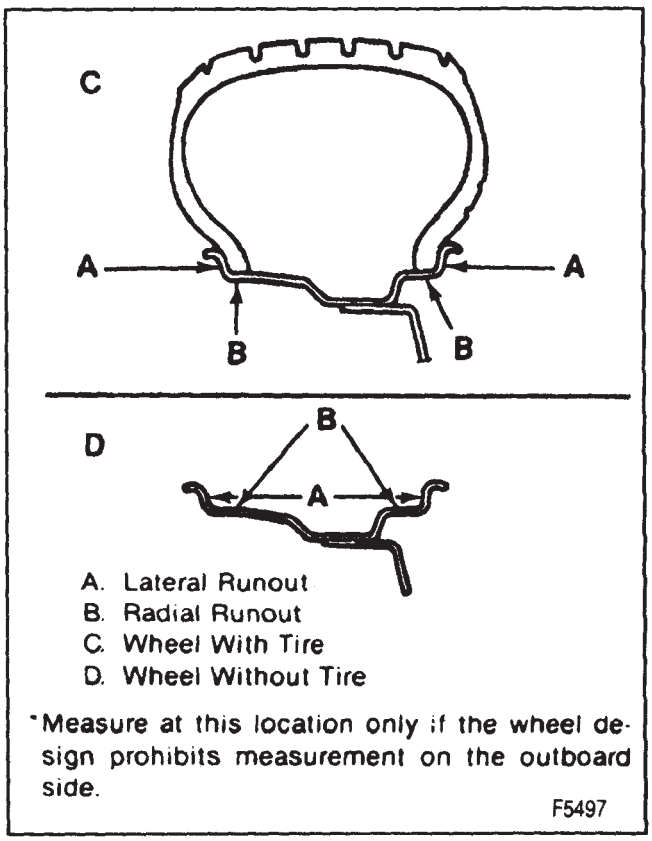

Figure 9—Wheel Runout

The maximum allowable radial and lateral tire and wheel runout is 0.050 when measuring off the vehicle, and 0.060 when measuring on the vehicle.

CORRECTING NON-UNIFORM TIRES

There are two ways to correct tires which cause a vibration even though they are properly balanced. One method uses an automatic machine which loads the tire and buffs small amounts of rubber from high spots on the outer two tread rows. Correction by this method is usually permanent and, if done properly, does not significantly affect the tire tread life.

Another method is to dismount the tire and rotate it 180 degrees on the rim. It is important that this be done on tire and wheel assemblies which are known to be causing a vibration.

HUB AND AXLE SHAFT STUD RUNOUT

When wheel and tire runout occurs on the vehicle and does not occur in the off-vehicle testing, the hub and axle shaft should be checked (figure 11).

MEASURING ROTOR OR AXLE SHAFT RUNOUT

Install or Connect

The dial indicator on the machined surface outside the bolts on the rotor axle flange (figure 11).

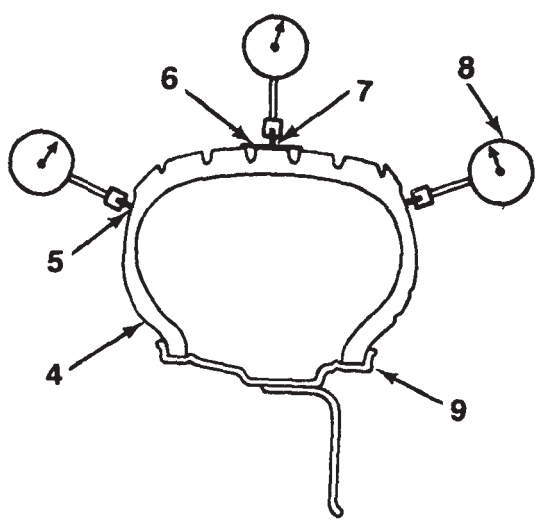

4. Tire
5. Lateral Runout Checkpoint
6. Tape
7. Radial Runout Checkpoint
8. Dial Indicator
9. Wheel

V1075

Figure 10—Measuring Tire/Wheel Assembly Runout

Measure

1. Turn the rotor or axle flange to locate the low spot.
2. Zero the dial indicator.
3. Turn the rotor or axle flange to locate the low spot. 0.005 inch is the acceptable lateral runout.

MEASURING AXLE SHAFT STUD RUNOUT

Install or Connect

The dial indicator to contact the wheel mounting studs (figure 11).

Measure

1. Turn the hub to register on each of the studs.
2. Zero the dial indicator on the lowest stud.
3. Check the total runout on the remaining studs. 0.030 inch is the acceptable radial runout.

PROPELLER SHAFT

Driveline vibrations will generally be a high speed vibration, a "buzz" or a "shudder." With tire and wheel speeds in the 45-50 mph range, the average tire and wheel speeds are 600 rpm. A driveline because of the gear ratios, will turn at a higher rpm. Most driveline vibrations occur in the 45-55 mph range, with the most troublesome area on either acceleration or deceleration. Driveline vibrations come from four general areas:

1. Shaft balance
2. Shaft runout
3. Pinion flange Runout
4. Joint phasing
5. Driveline angles

Most driveline vibrations that are associated with a "buzz" or "shudder" type vibration will also have a high frequency reading on the Reed Tachometer. Refer to "reed tachometer" in this section.

PROPELLER SHAFT RUNOUT CHECK

Noise vibration at high speed could be caused by a bent propeller shaft. The propeller shaft could have been damaged by rough handling or a collision. Check for propeller shaft straightness.

1. Raise the vehicle on a twin post hoist so the wheels can spin.
2. Attach a dial indicator having a magnetic base to a smooth place on the vehicle underbody.
3. Take dial indicator readings at the propeller shaft check points A, B and C (figure 12).

Important

- Do not attach the dial indicator base at a weld.

4. With the transmission in neutral, hand rotate the axle pinion flange or the transmission yoke and take the necessary dial indicator readings on the propeller shaft. Record the readings. If the runout is over specification at one or more check points, rotate the propeller shaft 180 degrees at the pinion flange. Reinstall and check the runout. If the runout is still over specification, check the pinion flange runout before replacing the propeller shaft.

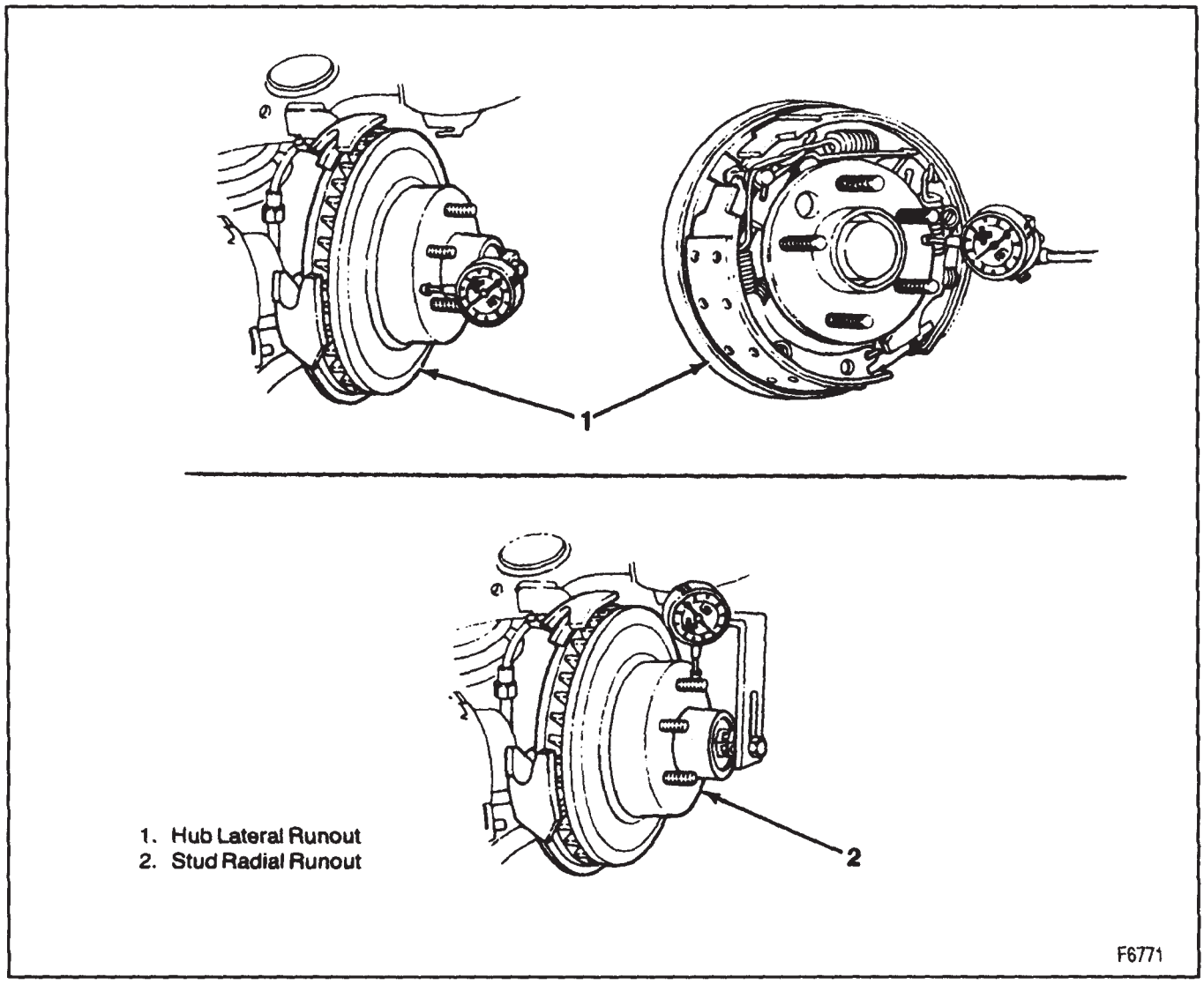

Figure 11—Hub and Axle Shaft Stud Runout

Refer to REAR AXLE (SECTION 4B1). For models having a two-piece driveline, measure the rear propeller shaft runout first (figure 12). Reference mark the position of the rear propeller shaft yoke to the pinion flange, then remove the rear propeller shaft. Measure the front propeller shaft runout on the tube and at the splined shaft end. If the runout exceeds the specifications found in PROPELLER SHAFT (SECTION 4A), replace the shaft.

- The runout of splined shaft end will affect the runout of the front measurement on the rear shaft.

5. Check the runout on the replacement propeller shaft. If the new propeller shaft runout is over specification, double-check the pinion flange runout.

Important

- The splined end of the front propeller shaft is critical to the smooth operation of a two-piece driveline. Be sure the dial indicator readings are accurate.

PROPELLER SHAFT BALANCE CHECK

- Raise the vehicle on a twin post hoist so the wheels can spin.

Remove or Disconnect

1. Tire and wheel assemblies and the brake drums.
   - **DO NOT APPLY THE BRAKE WITH THE DRUMS REMOVED.**

Inspect

- Propeller shaft, universal joints, and attachments for mud, undercoating, or loose fasteners.

Clean

- Propeller shaft, universal joints, and attachments.

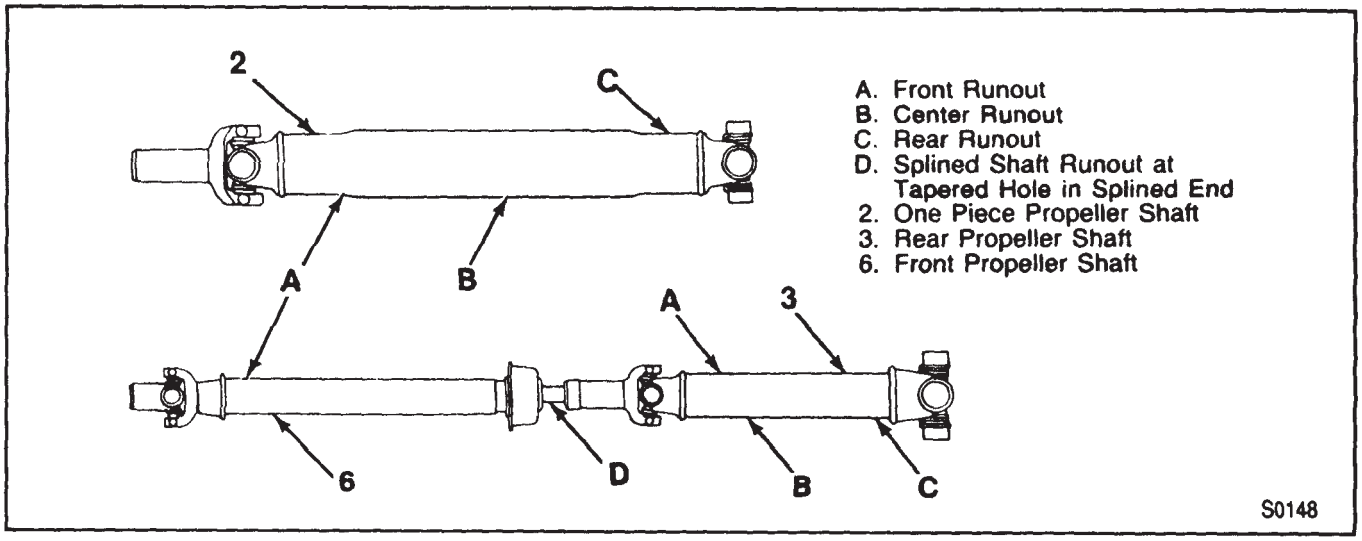

Figure 12—Checking Propeller Shaft Runout

Tighten

- Any loose attachments or fasteners.

Important

- Run the vehicle in gear at the speed where the disturbance peaks; observe the intensity of the disturbance as indicated by the reed tachometer. The greater the disturbance, the greater the amount of amplitude that will be seen on the reed tachometer. Refer to "Reed Tachometer" in this section.
- Stop the engine.

2. Propeller shaft.
   - Rotate the propeller shaft 180 degrees from the original position.

Install or Connect

1. Propeller shaft.
   - Determine the position which gives the lowest amplitude reading on the reed tachometer.
2. Rear drums, wheel and tire assemblies.
   - Determine the position which gives the best driveline response by road testing the vehicle for a final check of the propeller shaft balance.
   - For unacceptable balance, refer to "Propeller Shaft Balancing."

PROPELLER SHAFT BALANCING

Hose Clamp Method (Figures 13 and 14)

1. Place vehicle on a twin post hoist so that the rear of the vehicle is supported on the rear axle housing and the rear wheels are free to rotate. Remove both rear wheel assemblies and reinstall wheel lug nuts with flat sides next to drums.
2. Mark and number propeller shaft at four points 90 degrees apart at rear of propeller shaft just forward of balance weight (figure 13).
3. Install two hose clamps on the rear of the propeller shaft and slide them rearward until the clamps stop at the nearest balance weight welded to the tube. Align both clamps at any one of the four marks made on shaft in Step 2 and tighten.
4. Run the vehicle through the speed range to 50-55 mph (81-89 km/h). Note amount of imbalance felt at front of axle housing or as indicated by a reed tachometer.

   CAUTION: Never run vehicle higher than 55 mph (89 km/h). All persons should stay clear of universal joints and balance weight areas to avoid possible injury. Do not run on hoist for extended periods due to danger of overheating the transmission or engine.
5. Loosen clamps and rotate clamp heads 90 degrees to the next mark on the propeller shaft. Tighten clamps and repeat Step 4.
6. Repeat Step 5 until vehicle has been run with clamp heads located at all four marks on shaft.
7. Position clamps at point of least imbalance. Rotate the clamp heads away from each other 45 degrees (one on each side of the position)(figure 14). Run the vehicle and note if imbalance has improved.

   In some cases, it may be necessary to use one clamp or possibly three clamps in order to obtain a good balance. Replace propeller shaft if three hose clamps do not improve the imbalance.
8. Continue to rotate the clamps apart in smaller angular increments until the imbalance is at its minimum.

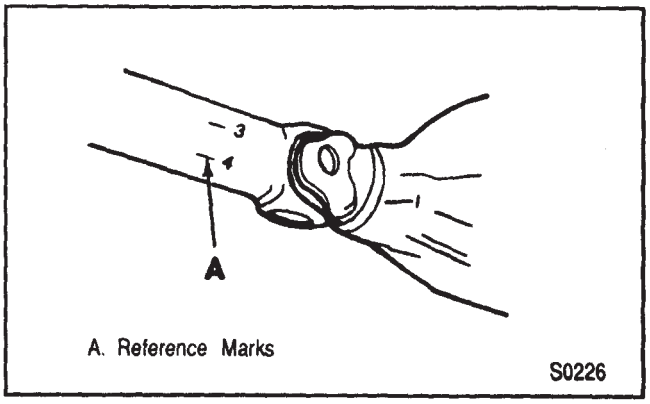

Figure 13—Propeller Shaft Reference Marks

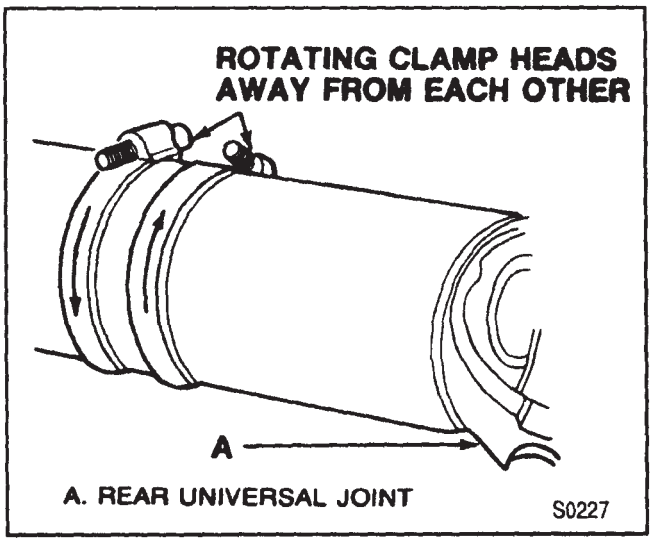

Figure 14—Rotating Hose Clamps

9. Reinstall wheel assemblies and road test the vehicle for final check of balance. A minimal vibration felt in the vehicle on the hoist may not show up during a road test.

STROBE LIGHT METHOD (FIGURES 15 AND 16).

If a wheel balancer of the strobe light type is available, the use of such a unit will facilitate the balancing of the propeller shaft. The balance pick-up unit should be placed directly under the nose of the rear axle carrier and as far forward as possible.

1. Place the vehicle on a twin post hoist so the rear of the vehicle is supported on the rear axle housing and the rear wheels are free to rotate. Lower rear hoist and allow axle to rest on jackstands. The groove in the rear hoist fixture could clamp the axle and destroy the sensitivity of the operation. Remove both rear wheel assemblies and reinstall wheel lug nuts with flat sides next to the drums.
2. Mark and number propeller shaft at four points 90 degrees apart at rear of propeller shaft just forward of balance weights, as shown in figure 13.
3. Place the strobe light wheel balancer pick-up under the nose of the carrier (figure 15).
4. Run vehicle in gear at the speed where the disturbance is at its peak, as indicated by driver input and by use of a reed tachometer holding at a constant speed. Point strobe light up at the spinning propeller shaft and not position of one of the reference numbers. Shut off engine and position the propeller shaft so the reference numbers will be in the same position as was noted while the shaft was rotating.

   When strobe light flashed, the heaviest point of the propeller shaft was at the bottom (6 o'clock). To balance the propeller shaft, it would be necessary to apply the balancing weights (hose clamps) 180 degrees away from the heaviest point or at the top of the propeller shaft (12 o'clock) opposite to balance weight.
5. Install two screw-type hose clamps on the propeller shaft as close to the rear as possible. Position both clamp heads 180 degrees from the heaviest point of propeller shaft as indicated by strobe light. Tighten clamps.
6. Run vehicle through the speed range. If disturbance is gone, nothing further need be done on the hoist. If the disturbance is not gone, and the strobe light shows the clamp heads at the bottom (6 o'clock) of the propeller shaft, go to Step 7. If the strobe light shows the two clamp heads at the top of the propeller shaft, add one more hose clamp and recheck. If the strobe light shows the three clamp heads at the top of the propeller shaft, remove the propeller shaft and re-index it 180 degrees on the rear axle pinion companion flange. Recheck with no clamps. Repeat balance starting with Step 5. If the propeller shaft still needs more than three hose clamps at the same clock position, replace it. If the clamps are also 180 degrees from their original position after the propeller shaft was re-indexed 180 degrees, the rear axle pinion companion flange is out of balance and must be replaced. DO NOT use more than three hose clamps to balance the propeller shaft. If the strobe light shows the hose clamps at the bottom of the propeller shaft, but the disturbance still exists, go to Step 7.

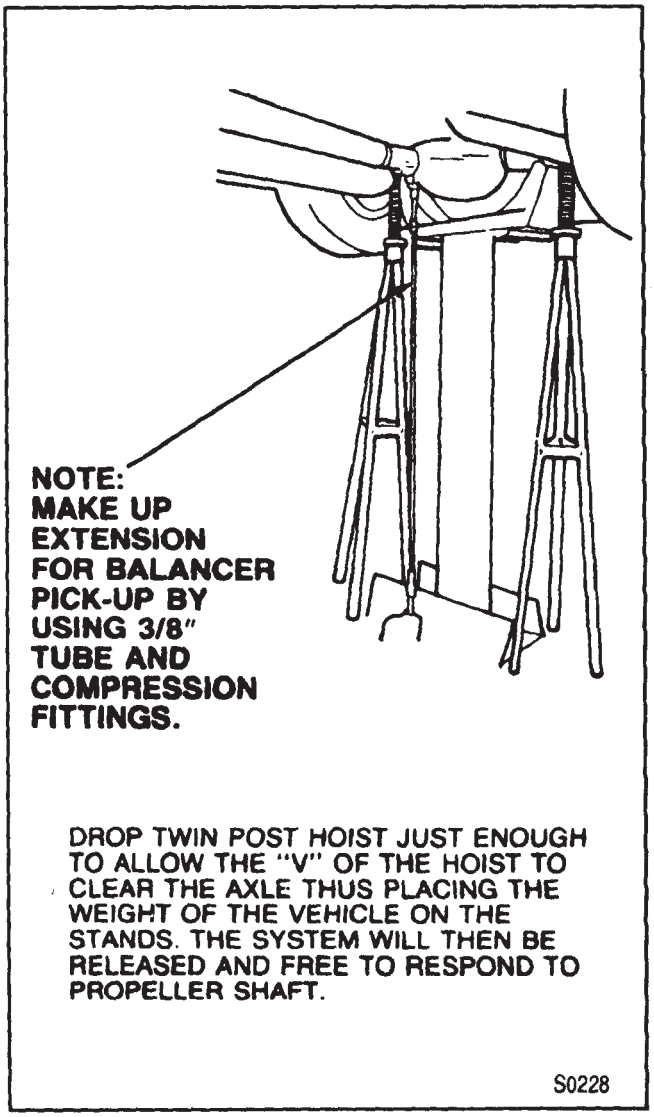

Figure 15—Pick-up Unit Replacement

7. Rotate two of the hose clamps equally away from each other toward the top (one on each side of the position) in small increments until the best balance is achieved (figure 16).

   In some cases it may be necessary to use one clamp or possibly three clamps in order to obtain a good balance.

   Replace the propeller shaft if three hose clamps do not correct the problem.
8. Install wheels and road test vehicle for final check of balance.

Vibration felt in the vehicle on the hoist may not show up during a road test.

PROPELLER SHAFT PHASING

The propeller shaft is designed and built with the yoke lugs (ears) in line with each other. This design produces the smoothest running shaft possible, and is called phasing (figure 17).

Vibration can be caused by an out of phase propeller shaft. The propeller shaft will absorb vibrations from speeding up and slowing down each time the universal joint goes around. A total cancellation of vibration produces a smooth flow of power in the driveline.

DRIVELINE ANGLES

When two shafts intersect at any common universal joint, the bend that is formed is called the working angle (figure 18). The larger the working angle, the larger the amount of acceleration and deceleration of the universal joint. For every revolution of the propeller shaft, there are two accelerations and deceleration of the universal joints. This speeding up and slowing down of the universal joint must be cancelled out to produce a smooth power flow. This is done through phasing and proper universal joint working angles.

MEASURING DRIVELINES ANGLES

Driveline angles can be measured using an inclinometer. The vehicle should be supported at curb weight with a full tank of gasoline. The J 23498 inclinometer is installed on the propeller shaft bearing cap. A J 24479 magnetic base can be used on the propeller shaft tube (figure 19).

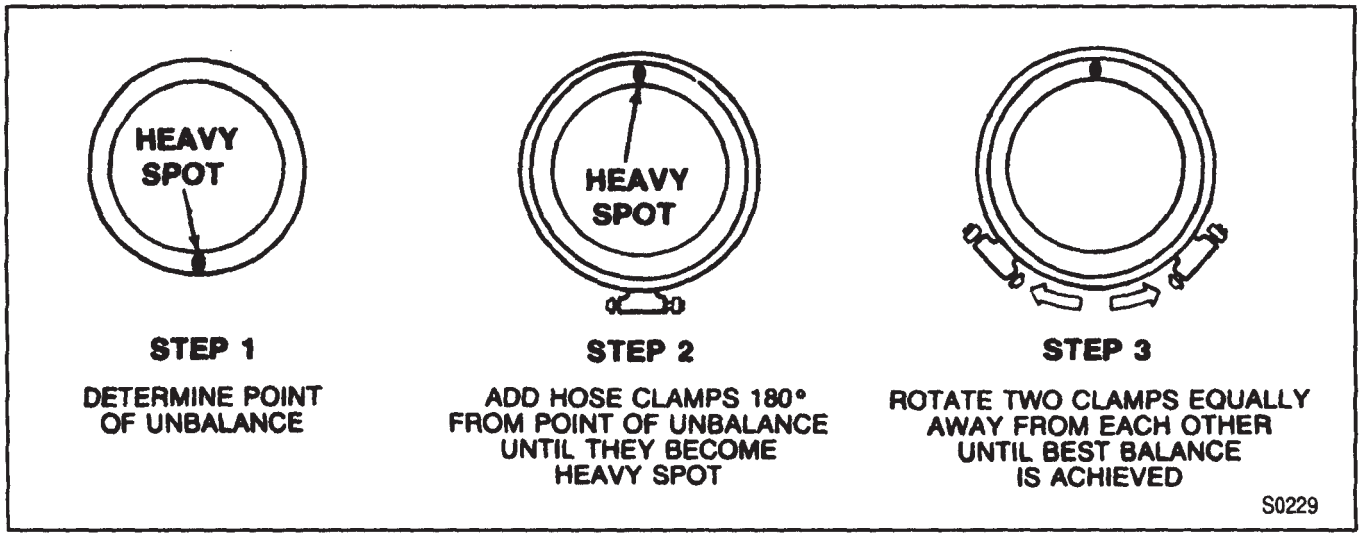

Figure 16—Positioning Hose Clamps to Achieve Best Balance

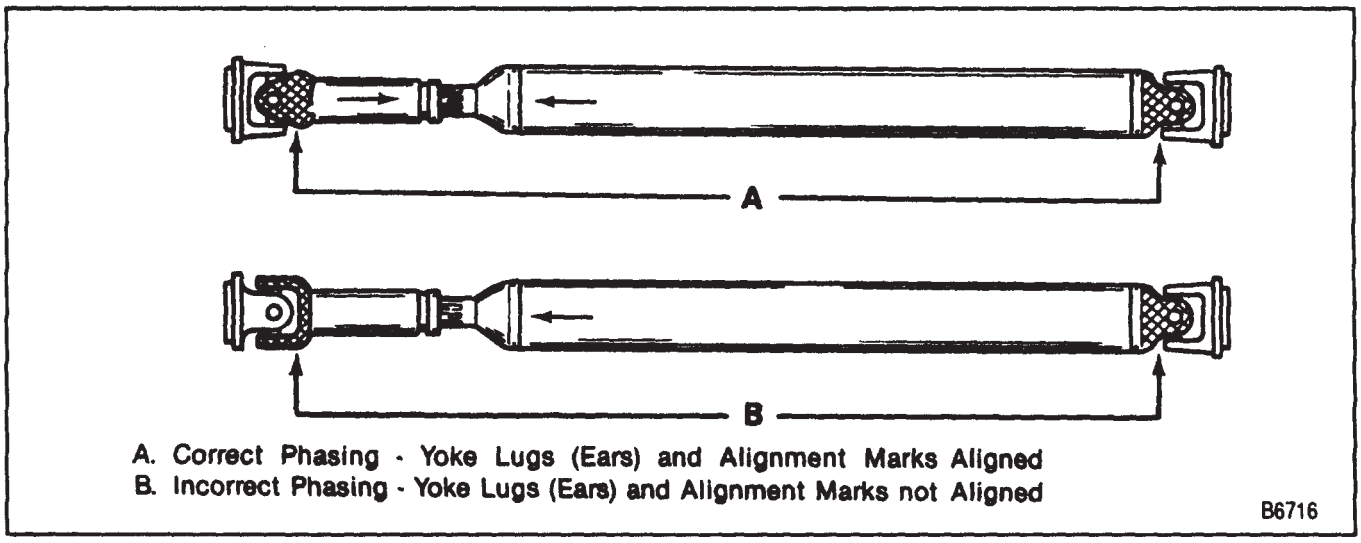

Figure 17—Phasing

ANGLE AT REAR UNIVERSAL JOINT

1. Place inclinometer J 23498 on rear propeller shaft bearing cap (figure 20). Center bubble in sight glass and record measurement. Bearing cap must be straight up and down and free of dirt or other foreign material to obtain an accurate measurement.
2. Rotate propeller shaft 90 degrees and place inclinometer on rear drive yoke bearing cap (figure 21). Center bubble in sight glass and record measurement.

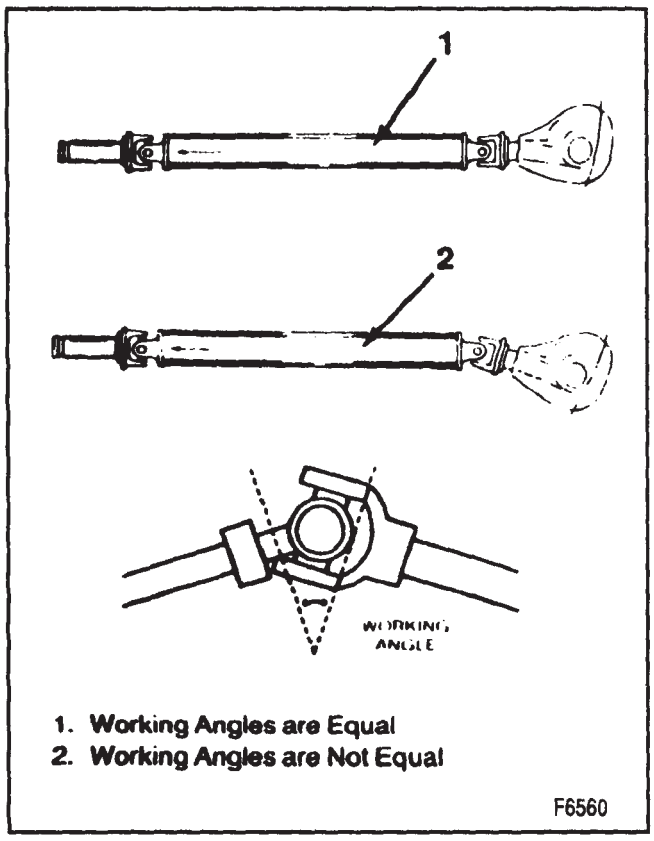

Figure 18—Working Angles

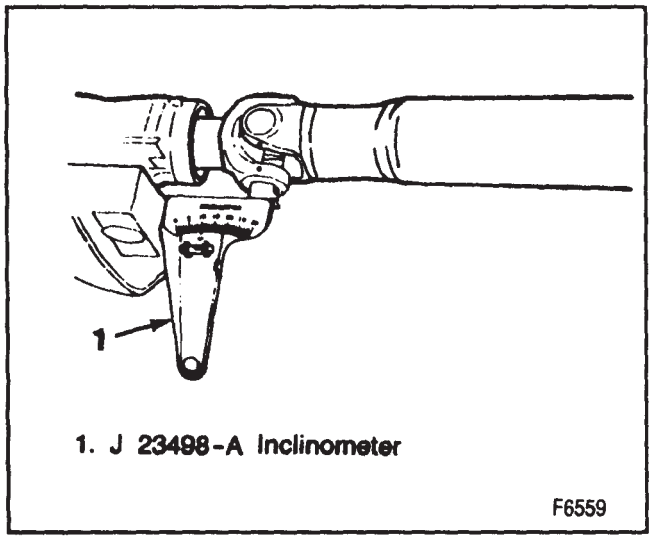

Figure 19—Measuring Driveline Angles

3. Subtract smaller figure from larger figure to obtain the rear universal joint angle.

ANGLE AT FRONT UNIVERSAL JOINT

1. Place inclinometer on front propeller shaft bearing cap (figure 22). Center bubble in sight glass and record measurement.
2. Rotate propeller 90 degrees and place inclinometer on front slip spline yoke bearing cap (figure 23). Center bubble on sigh glass and record measurement.
3. Subtract smaller figure from larger figure to obtain the front universal joint angle.

RULES FOR MEASURING DRIVELINE ANGLES

Rule Number 1— The working angles of each pair of U-joints must be within one-half degree of being equal on shafts that turn at 3,200 rpm or higher, or within one degree of being equal on shafts that turn at speeds below 3,200 rpm.

Rule Number 2— (Involves a two drive shaft, three U-joint system.) With a three-joint system, there is always an odd joint that cannot be paired with another joint. Since the U-joint between the transmission and

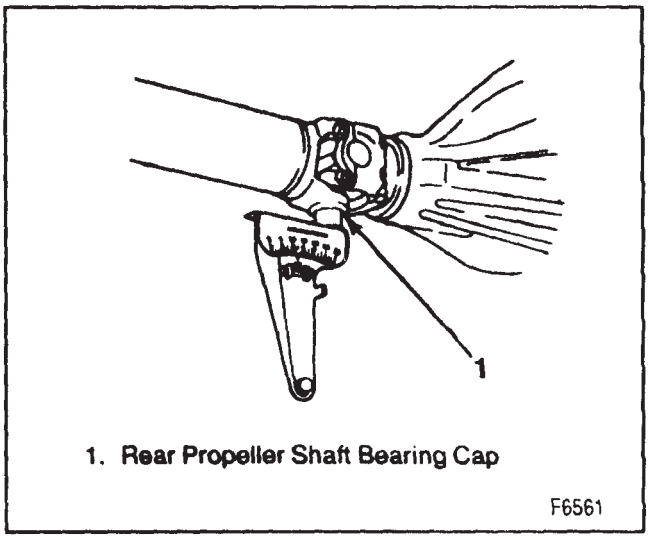

Figure 20—Measuring Rear U-Joint Working Angle

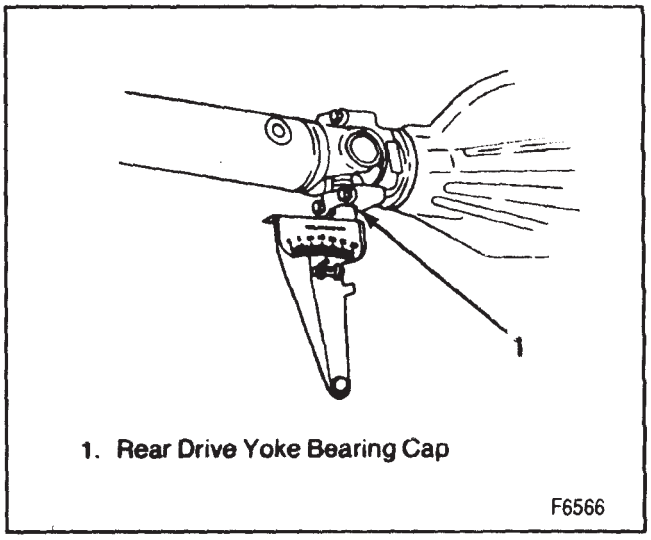

Figure 21—Measuring Rear U-Joint Working Angle

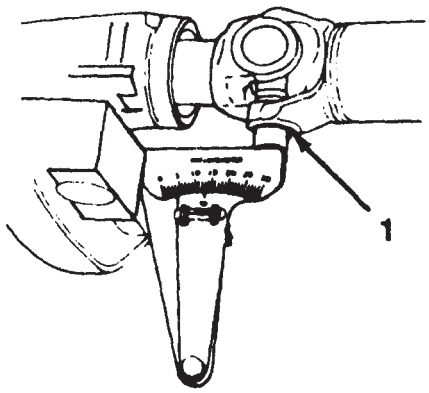

1. Front Propeller Shaft Bearing Cap

F6567

Figure 22—Measuring Front U-Joint Working Angle

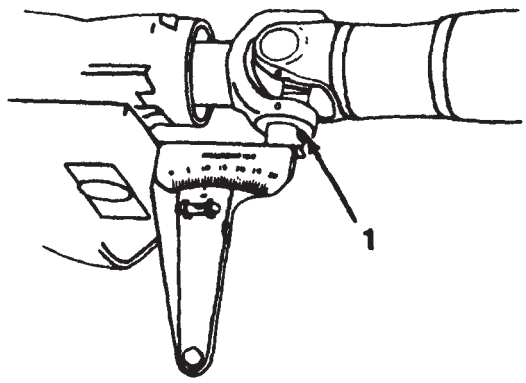

1. Front Slip Spline Yoke Bearing Cap

F6568

Figure 23—Measuring Front U-Joint Working Angle

the front shaft does not have a mate to cancel out its acceleration and deceleration, this front shaft should be within one-half degree of the transmission angle for high-speed shafts and within one degree for low-speed shafts. If the rear-end pinion angles is not equal to either the engine/transmission angle or front shaft angle, it should be at an angle between those two. There can be one-half degree difference between the center and rear U-joint working angles provided neither of the working angles exceeds 4 degrees on high-speed shafts, or 5 degrees on low-speed shafts.

VIBRATION DIAGNOSIS CHARTS

Refer to Figures 24 through 31.

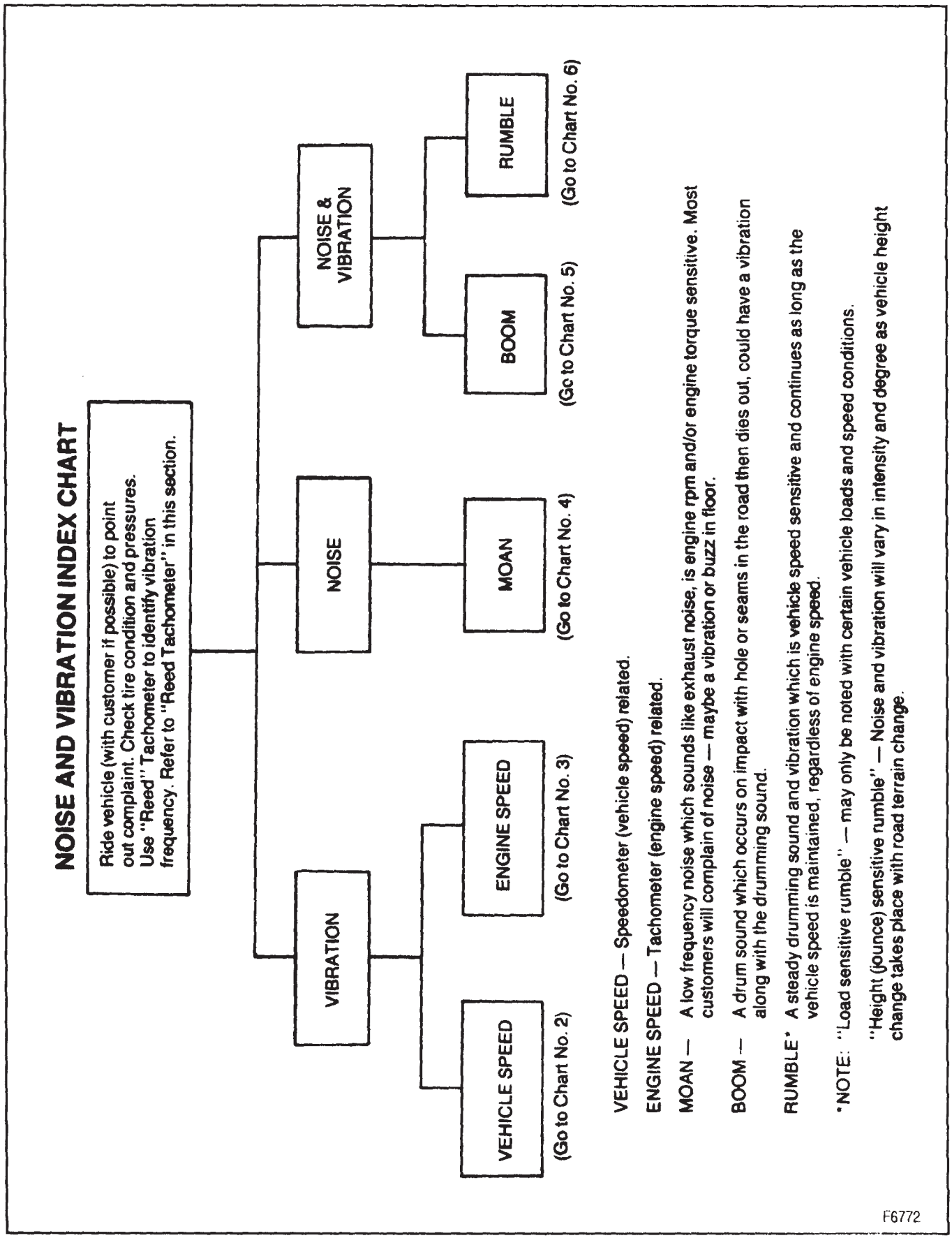

Figure 24—Vibration Diagnosis Chart #1

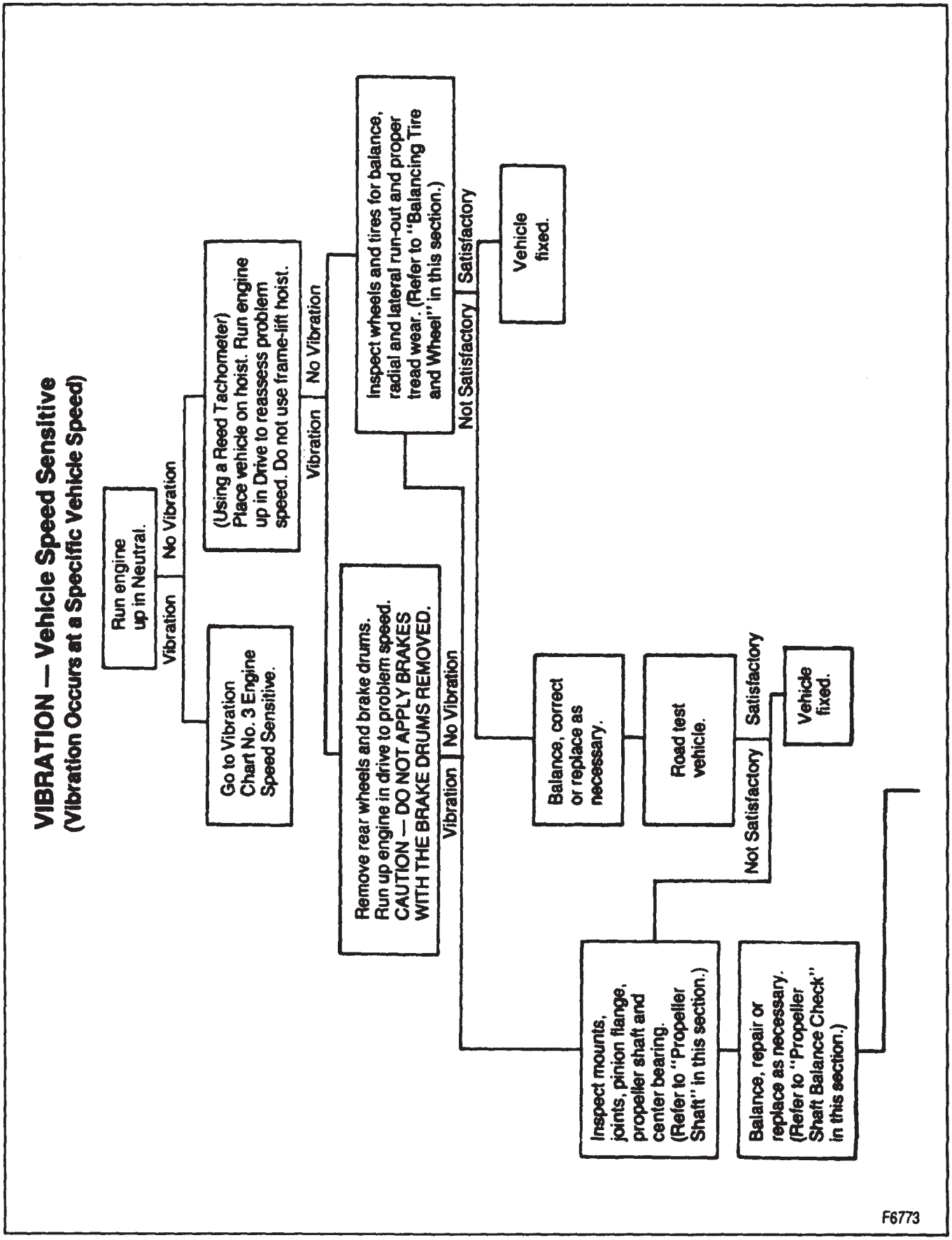

Figure 25—Vibration Diagnosis Chart #2

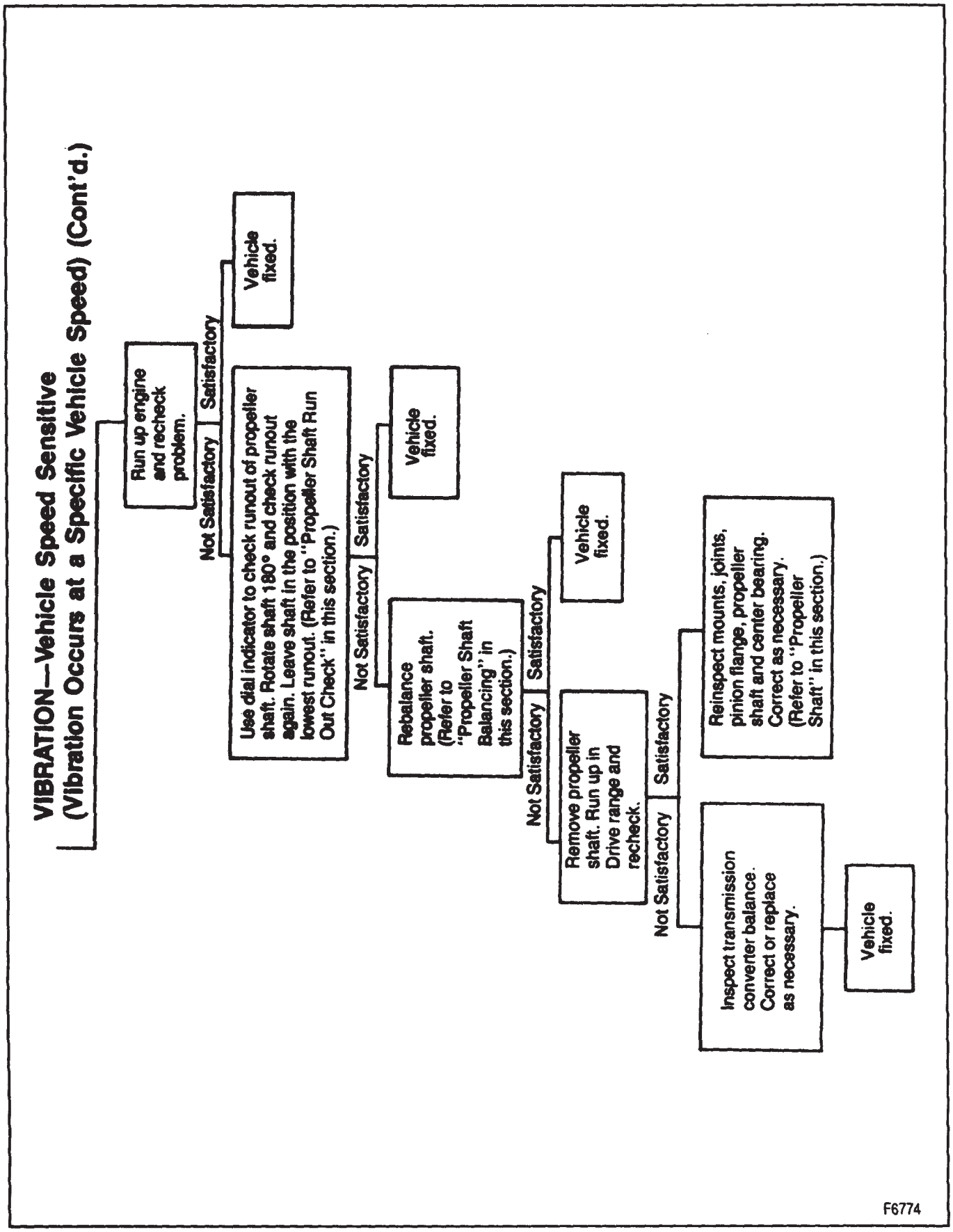

Figure 26—Vibration Diagnosis Chart #2 Continued

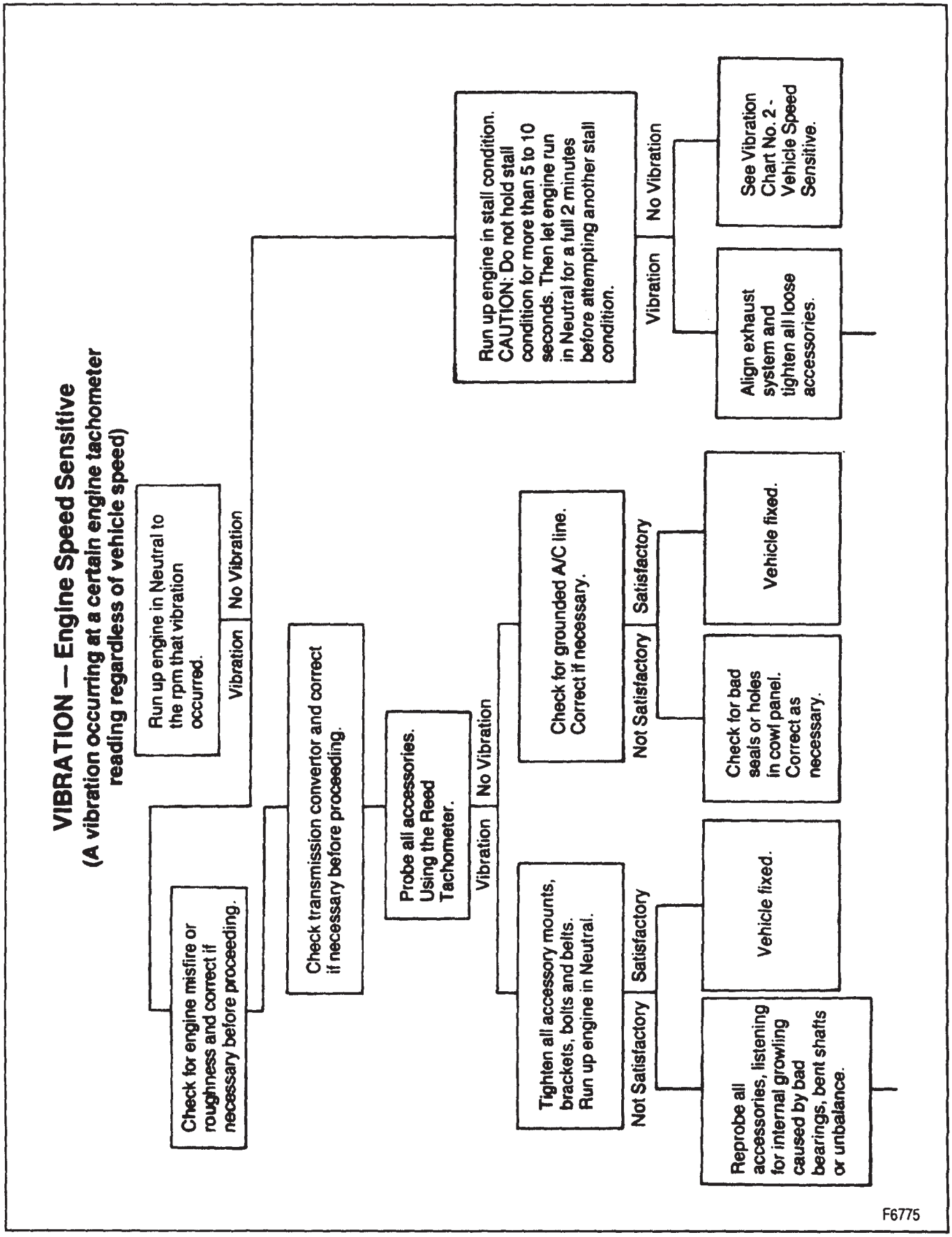

Figure 27—Vibration Diagnosis Chart #3

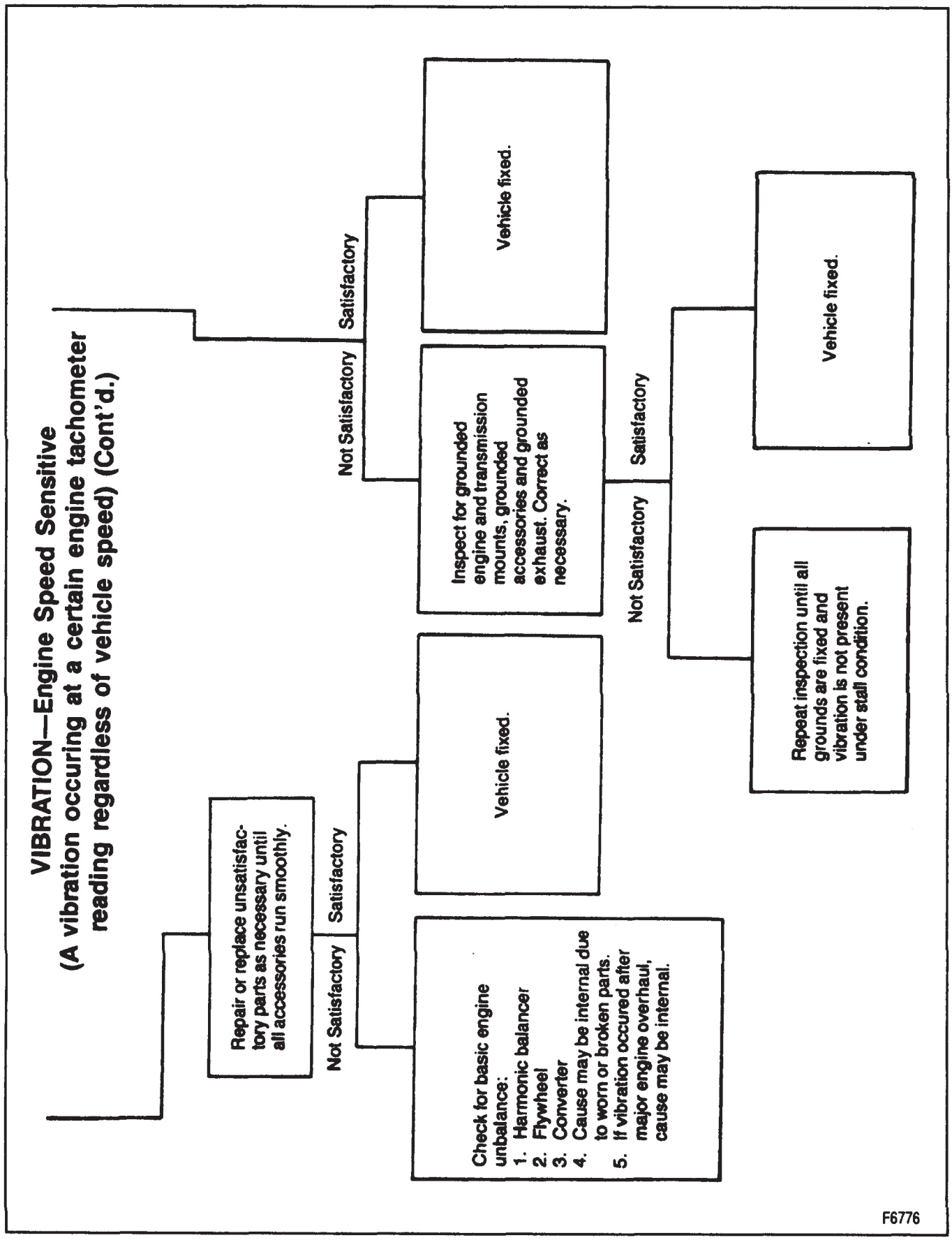

Figure 28—Vibration Diagnosis Chart #3 Continued

MOAN

(Low Frequency Noise Which Sounds Like Exhaust Noise, Is Engine RPM and/or Engine Torque Sensitive — Sometimes Accompanied by Vibration or Buzz in Floor)

Visually and physically inspect and correct:

1. Loose air cleaner wing nut.
2. Loose accessory drive belts.
3. All accessory mounting brackets and bolts for tightness.
4. Grounded A/C lines.
5. Grounded engine and transmission mounts.
6. Grounded exhaust system.

F6777

Figure 29—Vibration Diagnosis Chart #4

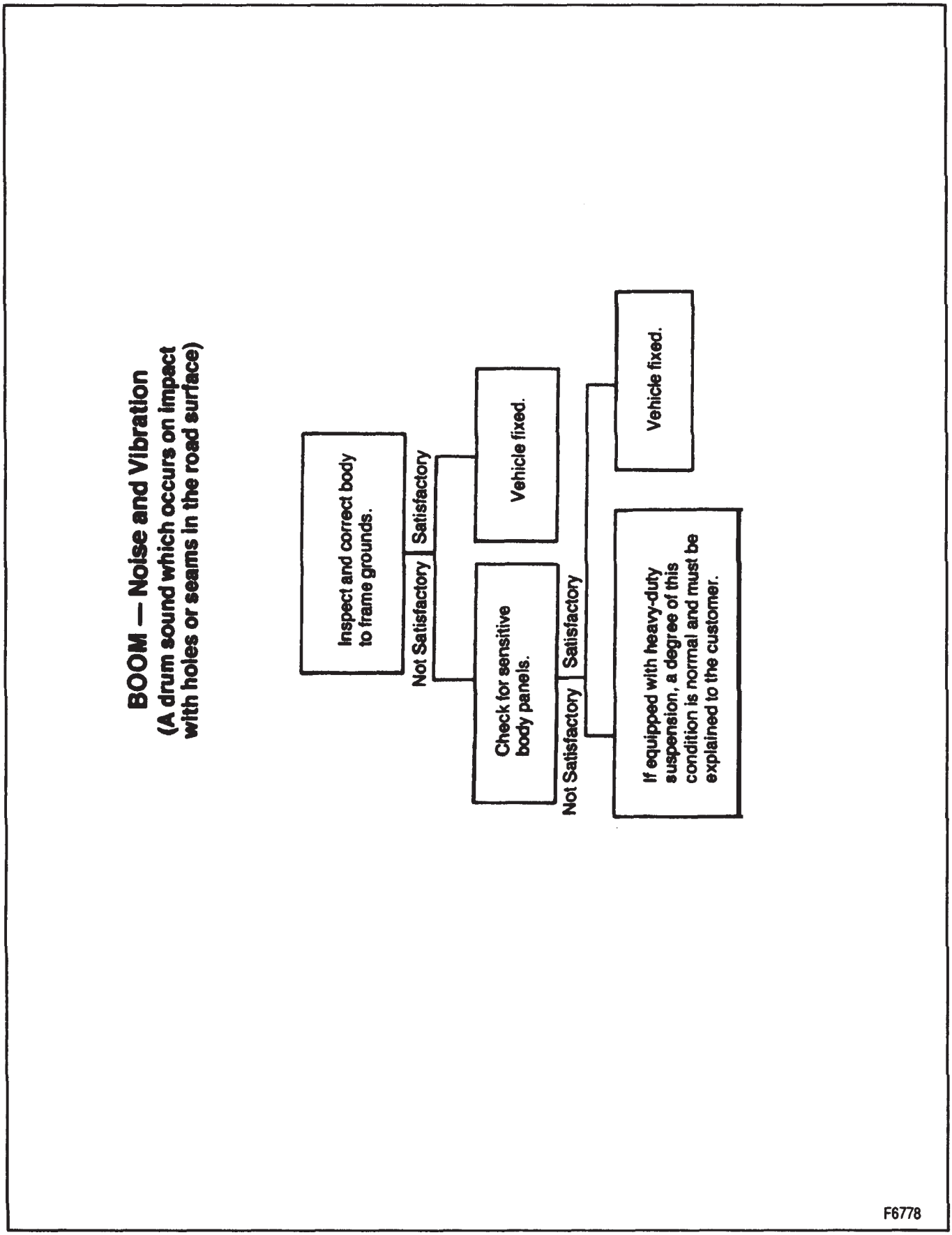

Figure 30—Vibration Diagnosis Chart #5

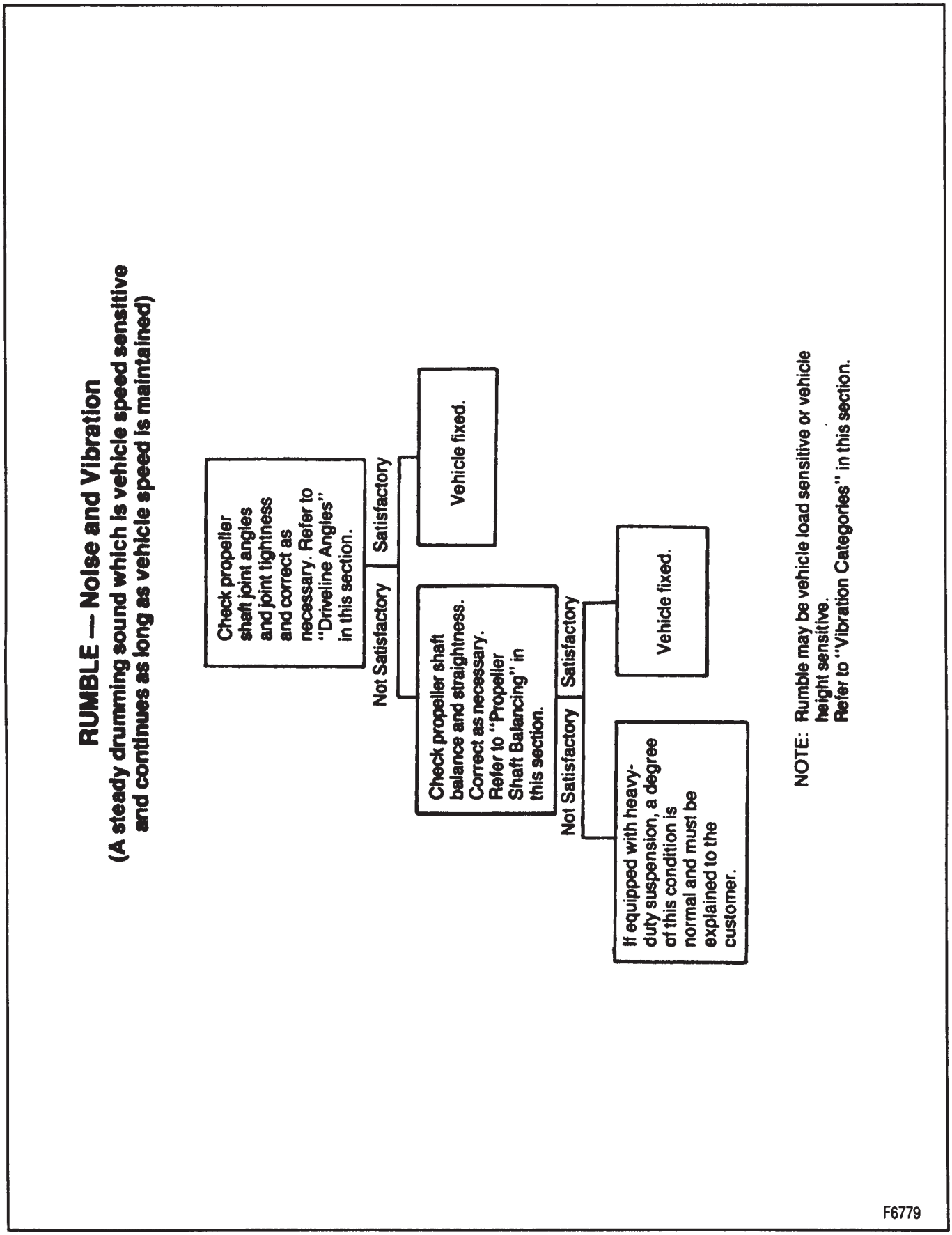

Figure 31—Vibration Diagnosis Chart #6

SPECIAL TOOLS

1. 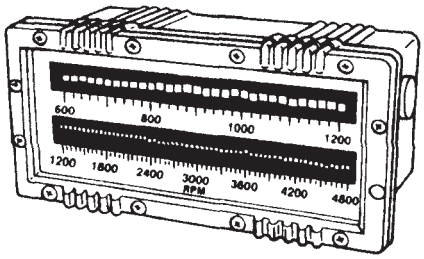

P/N 313510

2. 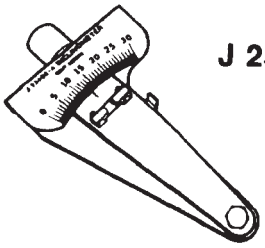

J 23498-A

1. Biddle Frahm Reed Tachometer
2. Inclinometer

V1077

SECTION 1

HEATING AND AIR CONDITIONING

CONTENTS

SUBJECT	PAGE
Heating and Ventilation	1A-1
Air Conditioning	1B-1

SECTION 1A

HEATING AND VENTILATION

***NOTICE:** When fasteners are removed, always reinstall them at the same location from which they were removed. If a fastener needs to be replaced, use the correct part number fastener for that application. If the correct part number fastener is not available, a fastener of equal size and strength (or stronger) may be used. Fasteners that are not reused, and those requiring thread locking compound will be called out. The correct torque value must be used when installing fasteners that require it. If the above conditions are not followed, parts or system damage could result.*

CONTENTS

SUBJECT	PAGE
General Description	1A- 2
Controls	1A- 2
Air Distribution System	1A- 2
Operating Modes	1A- 5
Ventilation	1A- 5
Diagnosis	1A- 5
Functional Test	1A- 5
Heater Output Temperature Check	1A- 7
Insufficient Heating or Defrosting	1A- 8
Improper Air Delivery	1A- 8
High or Low Temperature Control Effort	1A- 8
Blower Noise	1A- 8
Blower Inoperative	1A- 8
On-Vehicle Service	1A-15
Blower Motor Replacement	1A-15
Blower Motor Fan Replacement	1A-15
Blower Motor Resistor Replacement	1A-17
Heater Hose Replacement	1A-17
Blower Case Replacement	1A-18
Heater Core Replacement	1A-19
Control Assembly and Blower Switch Replacement	1A-19
Temperature and Vent Cable Replacement	1A-20
Temperature and Defroster Cable Adjustment	1A-20
Plenum Side Vent Replacement	1A-21
Specifications	1A-24

GENERAL DESCRIPTION

The deluxe heater system provides heating, power upper and lower ventilation, ram lower ventilation, and windshield and side window defrosting (figures 1 and 2).

The defrost mode operates with the right and left side window defroster ducts routing air to outlets on either side of the instrument panel. The duct work provides power center and outboard ventilation. Vents provide ram air ventilation.

Levers and a fan switch on the control assembly control system operation. These snap-in cables are attached to the modular duct, heater and control levers.

The fan switch controls the fan speed ("OFF" to "HIGH") in all modes. The vent mode features power vent ventilation.

Outside air enters the plenum and is driven by the fan to the temperature door. In the cold position of the temperature door, air by-passes the heater core to the vent opening and enters the passenger compartment through the vent duct and outlets in the center and at either side of the instrument panel.

The mode selector can blend air between modes. Placing the selector between "HTR" (heater) and "VENT" varies the proportion of air coming out of the heater outlets and vent outlets. With the mode selector in some midway position, air coming out of the vent outlets will be ambient temperature, while air out of the heater outlets will be mixed warm air, its temperature depending on temperature lever position.

In the "HTR" (heater) and defrost mode, outside air is driven by the blower to the temperature door which, depending upon its position as controlled by the operator, distributes all or some portion of the inlet air through the heater core. The vent door will prevent air entry into the vent duct and direct this ambient air to the mix portion of the heater module. The air is thus heated, mixed, and then directed into either the defroster duct or the heater outlet by the position of the mode valve and control lever. A small amount of air is bled to the side window defroster system.

The mode selector may also be positioned midway between "HTR" (heater) and "DEFROST." This will distribute the air to both the heater and defroster outlets proportional to lever position.

Operating Tips

- Clear snow and ice from the hood and air inlet in front of the windshield. This helps the heater and defroster work better and reduces the chance of fogging the inside of the windshield.
- Run the fan on "HIGH" for a few moments before driving off. This helps clear the intake ducts of snow and moisture and reduces the chance of fogging the inside of the windows.
- Always keep the front inlet grilles clear of obstructions (leaves, ice, snow, etc.).
- Always keep the underseat air path clear of objects.

CONTROLS

The control assembly in the instrument panel contains a blower switch, a mode lever, and a temperature lever. The controls are lit when the headlamps are on. Electrical power is provided by the instrument panel lighting circuit from the instrument panel harness.

Brightness of the dial illumination is controlled by the instrument panel dimmer switch. The control assembly bulbs are in parallel with the radio bulb, the ashtray bulb, and instrument cluster illumination bulbs.

Temperature Lever

The temperature lever operates the temperature control cable that goes to the heater module. When the temperature lever is in the "COLD" or the lower end of the slot, all of the air delivered by the heater system is unheated. When the temperature lever is in the "HOT" or the upper end of the slot, all of the air passing through the heater module is heated before it is discharged. Intermediate positions of the temperature lever result in a mixture of heated and unheated air to provide more moderate air temperatures.

Mode Lever

The mode lever operates two control cables that go to the heater module. The two cables are the defrost control cable and the vent control cable. Each cable operates a crank lever and shaft that controls the position of an air valve in the heater module. Mode lever positions are "HEATER," "VENT" and "DEFROST" ("DEFROST" position is indicated by the defrost symbol).

Blower Speed Control

The blower switch is a four-position switch that provides three blower speeds plus an "OFF" position. The blower switch receives power from a 20 ampere fuse in the fuse block when the ignition is "ON." In the two intermediate speed positions, the circuit continues through the heater wiring harness to a resistor near the blower motor.

For "HIGH" blower speed, the circuit bypasses the resistor. From the resistor assembly, the circuit goes to the blower motor terminal. The blower motor circuit is complete from the blower motor through another wire in the heater wiring harness that is grounded to the dash panel sheet metal below the instrument panel.

AIR DISTRIBUTION SYSTEM

Within the heater module is a series of air valves called the temperature valve, vent valve and the defroster valve. These air valves are hinged parts that act like doors to direct the airflow through various sections of the heater module to provide the proper airflow for the selected operating mode. Each air valve is controlled by a control cable from the heater control assembly.

Temperature Valve and Heater Core

The temperature of the air coming from the heater duct and defroster nozzle is regulated by controlling the relative amounts of warm and cool air in the airflow coming from the heater module. The part of the total

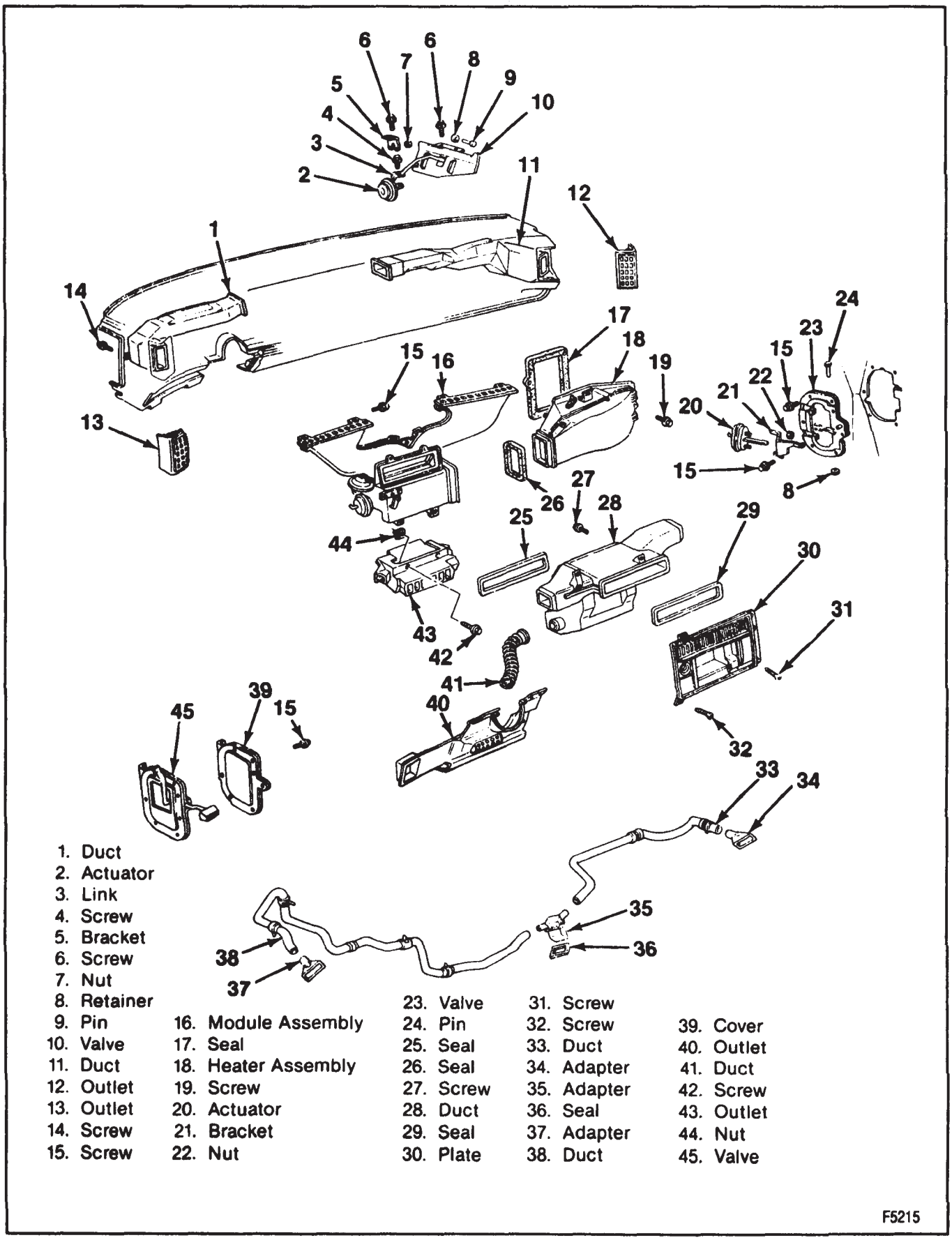

Figure 1—Heating System Component View

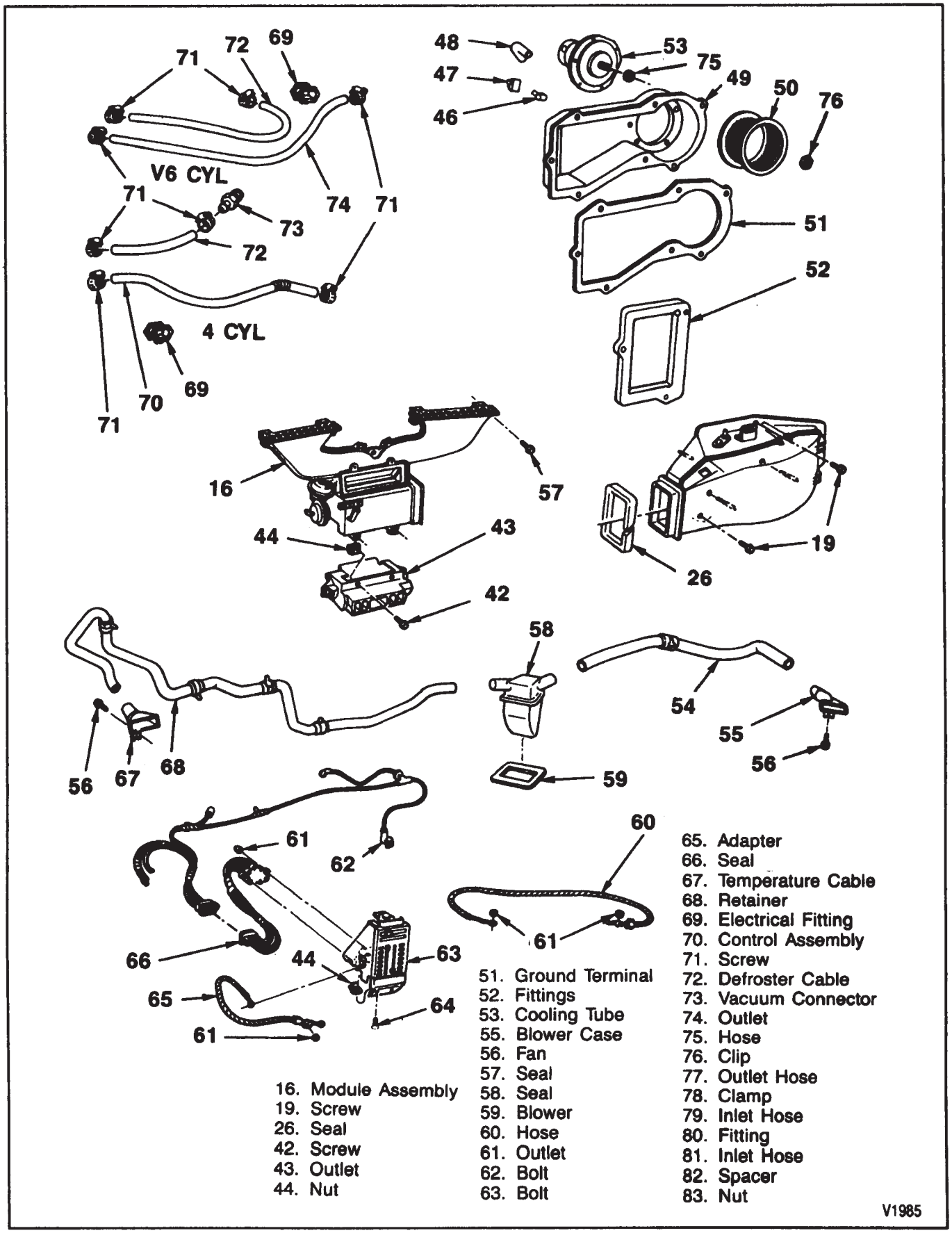

Figure 2—Air Distribution System Component View

airflow through the heater module that is allowed to pass through the heater core is governed by the temperature valve. The temperature valve is operated by the temperature control cable, working through a lever on the temperature valve shaft.

When the temperature lever in the control assembly is in the extreme lower end of its slot, in the full "COLD" position, the temperature valve is positioned to stop all of the airflow through the heater core so only unheated air is sent to the heater duct and defroster nozzle.

As the temperature lever is moved away from the full "COLD" position, the temperature control cable opens the temperature valve to allow an increasing amount of air to pass through the heater core. At the same time, the temperature valve reduces the amount of unheated air that is allowed to enter the mixture. This results in a very responsive control of the temperature of the air discharged through the heater ducts and defroster nozzle.

When the temperature lever reaches the full "HOT" position at the extreme upper end of its slot, the temperature control cable holds the temperature valve in a position that diverts all of the airflow through the heater core for maximum heating.

Hot coolant from the engine is directed through the heater core and returned to the cooling system when the engine is running.

Mode Valves

The heater system provides a choice of three basic operating modes, "VENT," "HTR" and "DEFROST."

OPERATING MODES

Vent Mode

With the mode lever in the "VENT" position at the extreme lower end of the slot in the dial, the vent control cable holds the vent valve open so it can admit air to the instrument panel outlet duct. Because this air is taken from the airflow that has not passed through the heater core, it is always at the temperature of the air outside the vehicle.

With the temperature lever in the full "COLD" position, the maximum amount of airflow will be delivered through the instrument panel outlet duct. As the temperature lever is moved away from the "COLD" position, airflow from the instrument panel outlet is reduced.

Heater Mode

When the mode lever is in the "HTR" position, the vent control cable partially closes the vent valve. The defroster valve remains closed. As a result, air from the blower fan is heated as necessary and directed to the defroster valve which sends most of the airflow to the heater duct, with some going to the defroster nozzle.

Defrost Mode

When the mode lever is in the extreme upper position in the slot, the defroster control cable moves the defroster valve to fully uncover the opening to the defroster nozzle and restrict the opening to the heater duct. This delivers the maximum airflow to the defroster nozzle, with only a little amount of airflow coming out of the heater duct.

VENTILATION

Two outboard vents provide ram air ventilation. The vents are installed in the side panels. Two push-pull controls mounted under the instrument panel control the vents.

When either vent is opened, air enters the passenger compartment from the pressurized plenum and is directed to the floor.

DIAGNOSIS

FUNCTIONAL TEST

Before beginning the functional test of the heater system, the vehicle should be idling with the coolant hot and the thermostat open. Coolant temperature should be close to 90°C (194°F). During the functional test, the operating efforts of the mode lever and the temperature lever should be evaluated. Even if a problem is found during any intermediate step of the functional test, the test should be completed before repair is started (figures 3 and 4).

1. Cycle the temperature lever to the extreme ends of travel in the slot of the control assembly dial to assure that the cable is properly adjusted.
2. Set the mode lever to "VENT."
   - Air at nearly the same temperature as the outside air should come from the instrument panel outlets.
   - Air should not come from the floor outlets, the defroster nozzles or the side window defroster outlets.
3. Move the mode lever to the "HTR" position.
   - Most of the air should come from the floor outlets with the remainder coming out of the defroster nozzles and defroster outlets.
   - Air should not come from the instrument panel outlets in the "HTR" position.
4. Move the mode lever from the "HTR" position to the "DEFROST" position.
   - Most of the air should be discharged onto the windshield from the defroster nozzles.
   - A small amount of air should also be discharged from the floor outlets.
5. Move the temperature lever back to the full "COOL" position and check to be sure the air temperature drops back to nearly the temperature of the outside air once again.
6. Slowly turn the blower switch toward "LO," stopping briefly at each intermediate blower speed position to notice the force of the airflow coming from the instrument panel center outlets and the sound of the blower.

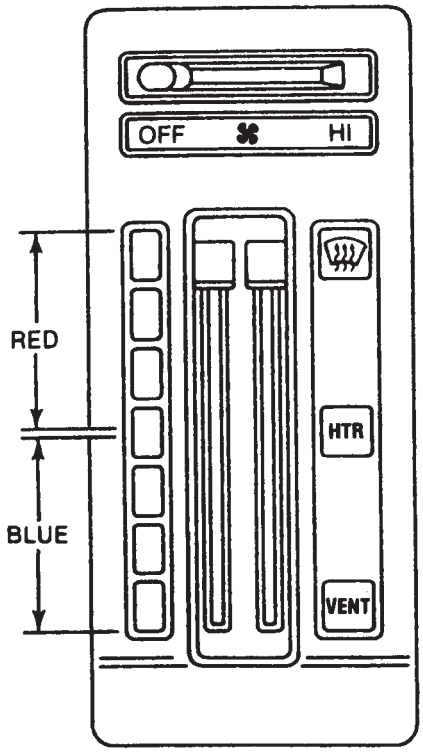

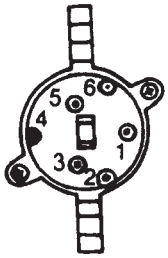

SELECT VALUE OPERATING CHART

CONNECTION	PORT	VENT	HEATER	DEFROST
INPUT	1	5, 6	2	6
HEATER	2	VENT	1	VENT
NOT USED	3	SEALED IN THE CONNECTOR		
NOT USED	4	SEALED IN THE CONNECTOR		
DEFROST	5	1, 6	VENT	VENT
A/C MODE	6	1, 5	VENT	1

BLOWER SWITCH

TERMINAL	POSITIONS			
	LO	MEDIUM 1	MEDIUM 2	HI
BATTERY +	NONE	MEDIUM 1	MEDIUM 2	HI
HI	NONE	NONE	NONE	BATTERY +
MEDIUM 1	NONE	BATTERY +	OPTIONAL	NONE
MEDIUM 2	NONE	NONE	BATTERY +	OPTIONAL

F8800

Figure 3—Control Assembly Operational Test

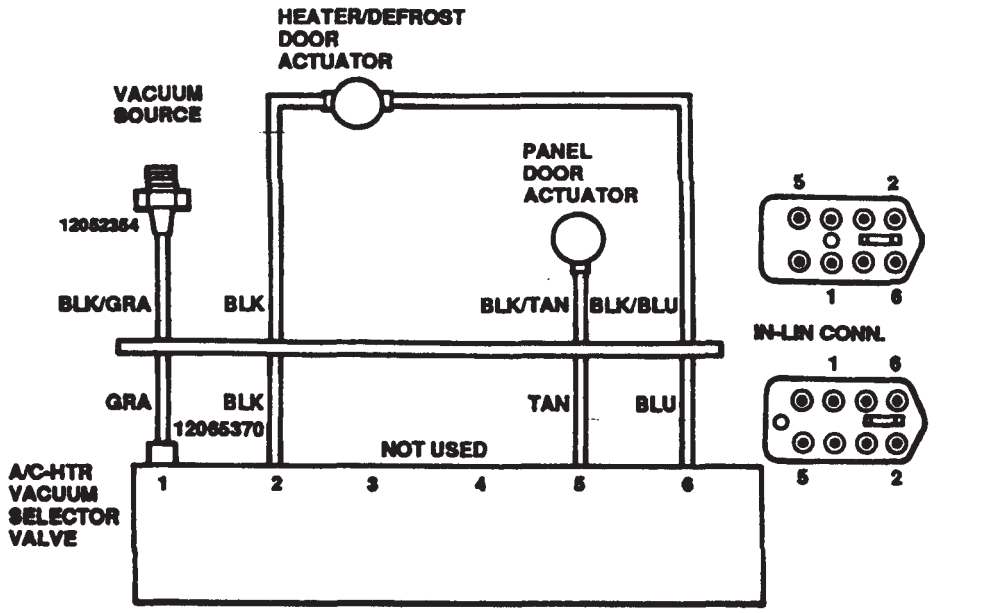

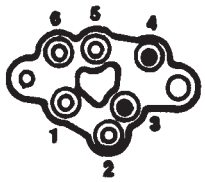

HTR VACUUM SELECTOR VALVE OPERATING CHART

CONNECTION	PORT	VENT	HEATER	DEFROST
SOURCE	1	VACUUM	VACUUM	VACUUM
HEATER	2	VENT	VACUUM	VENT
NOT USED	3	SEALED IN THE CONNECTOR		
NOT USED	4	SEALED IN THE CONNECTOR		
PANEL	5	VACUUM	VENT	VENT
DEFROST	6	VACUUM	VENT	VACUUM

V1994

Figure 4—Vacuum Schematic

- Both the airflow and the blower noise should reduce noticeably at each intermediate step.

HEATER OUTPUT TEMPERATURE CHECK

The heat output of the heater system can be checked with the following procedure.

Preparation

With the engine sufficiently cool, the radiator cap should be removed and the engine started and allowed to idle. Heater controls should be set to "HTR" mode, full "WARM" temperature and "HIGH" blower speed. When coolant flow in the radiator is visible through the filler neck, the radiator cap should be installed.

Temperature Check

When the engine is warmed up (after approximately 20 minutes of operation), the vehicle should be driven. An accurate thermometer should be used to determine the temperature of the outside air and the temperature of the air discharged at the floor outlets with the vehicle being driven at 48 km/h (30 mph). Minimum acceptable heater output temperatures at four different outside air temperatures are shown in the table below.

Outside Air Temperature	-18°C (0°F)	-4°C (25°F)	10°C (50°F)	24°C (75°F)
Heater Air Temperature	54°C (130°F)	59°C (139°F)	64°C (147°F)	68°C (155°F)

T2550

Minimum acceptable heater output temperatures for outside air temperatures other than those shown can be approximated by using the Fahrenheit scale and rounding off the outside air temperature to the nearest 5 degrees. For every additional 5 degrees of outside temperature, an additional 1.8 degrees of heater output temperature should be allowed when the outside temperature is below 50 degrees. An additional 1.6 degrees of heater output temperature should be allowed for every 5 degrees of outside temperature when the outside temperature is above 50 degrees.

INSUFFICIENT HEATING OR DEFROSTING

The most likely causes of insufficient heating outside the heater system include a low coolant level, a faulty thermostat, a partially or fully clogged heater core or hose, an obstruction to air circulation or an air leak past a faulty seal into the passenger compartment. For an organized diagnosis procedure, refer to figures 5 and 6.

IMPROPER AIR DELIVERY

If the "Functional Test" or other diagnosis indicates improper air delivery or a failure to shift modes when the mode lever is moved, check the attachment of the affected control cable at the heater module. Be sure the cable loop is connected to the crank pin and the cable sheath is retained.

If the cause of the problem is not discovered, disconnect the control cable at the crank pin and check the air control valve travel and effort. If there is proper valve travel and effort, check the control cable travel at the heater module end while moving the mode lever. If the cable end doesn't move, check for a broken cable or control assembly part and for an unattached cable end at the control assembly. Also, check for a sharp kink in the control cable sheath that could cause severe binding.

HIGH OR LOW TEMPERATURE CONTROL EFFORT

A kinked control cable, a binding valve or a faulty control assembly are possible causes of excessive temperature control lever effort. For an organized diagnosis procedure and an effective "fix" for too little temperature control effort, refer to figure 7.

BLOWER NOISE

A constant air rush noise is typical of all heater systems when operating on "HIGH" blower. Some systems and modes may be louder than others. If possible, check a similar vehicle to determine whether the noise is typical or excessive. For diagnosis of excessive blower noise, refer to figures 8 and 9.

BLOWER INOPERATIVE

When diagnosing problems in the blower electrical system, refer to figure 10.

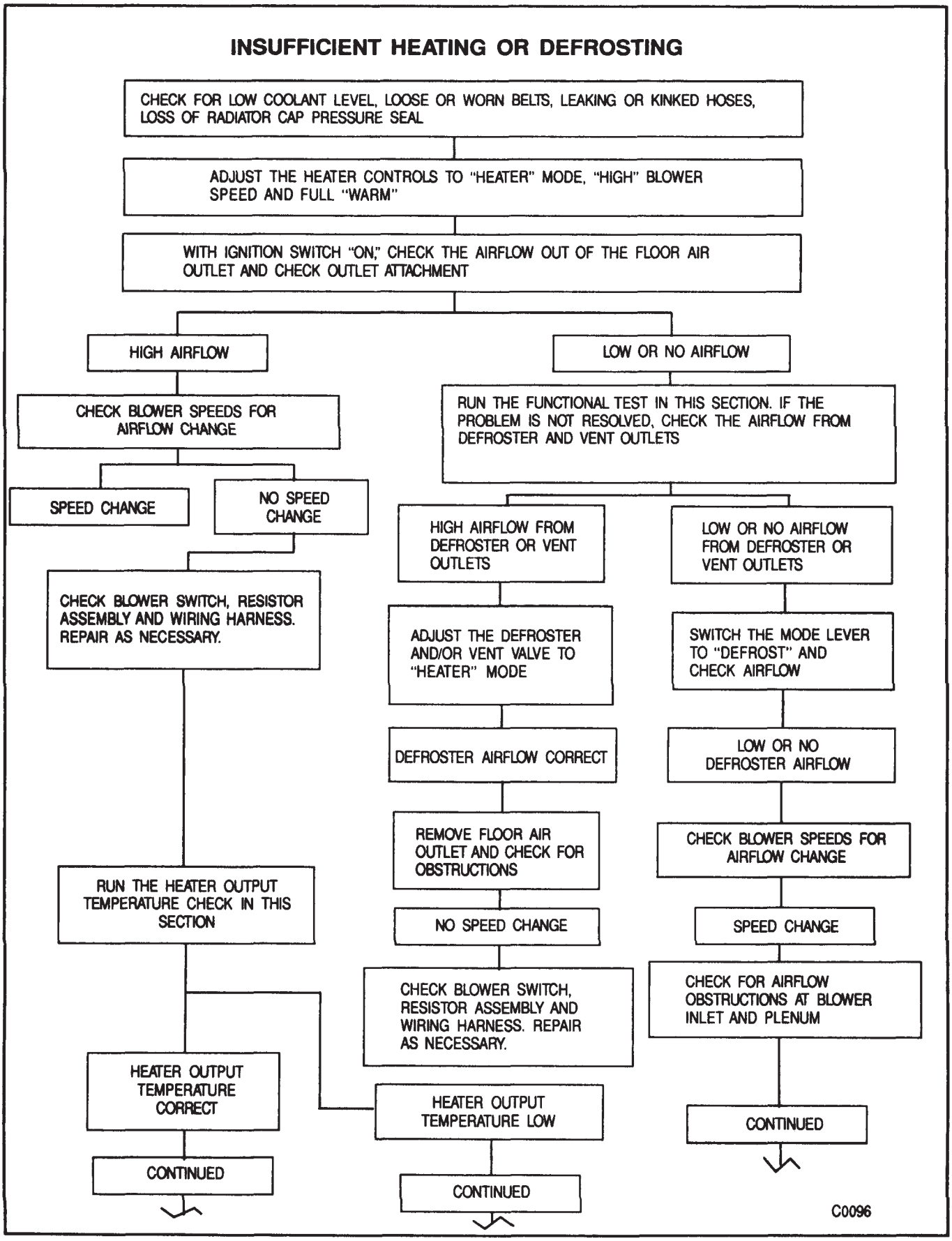

Figure 5—Insufficient Heating or Defrosting Procedure (1 of 2)

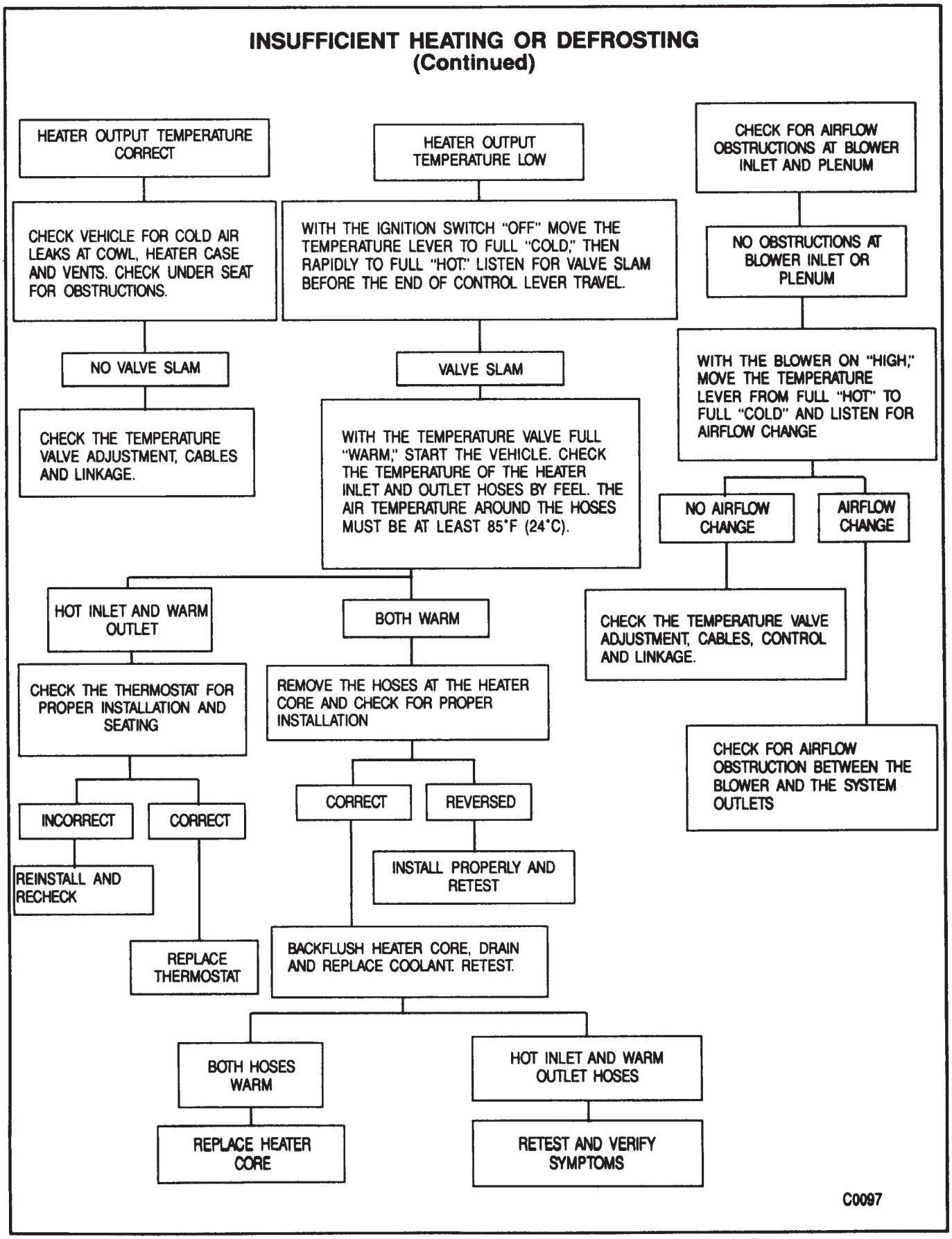

Figure 6—Insufficient Heating or Defrosting Procedure (2 of 2)

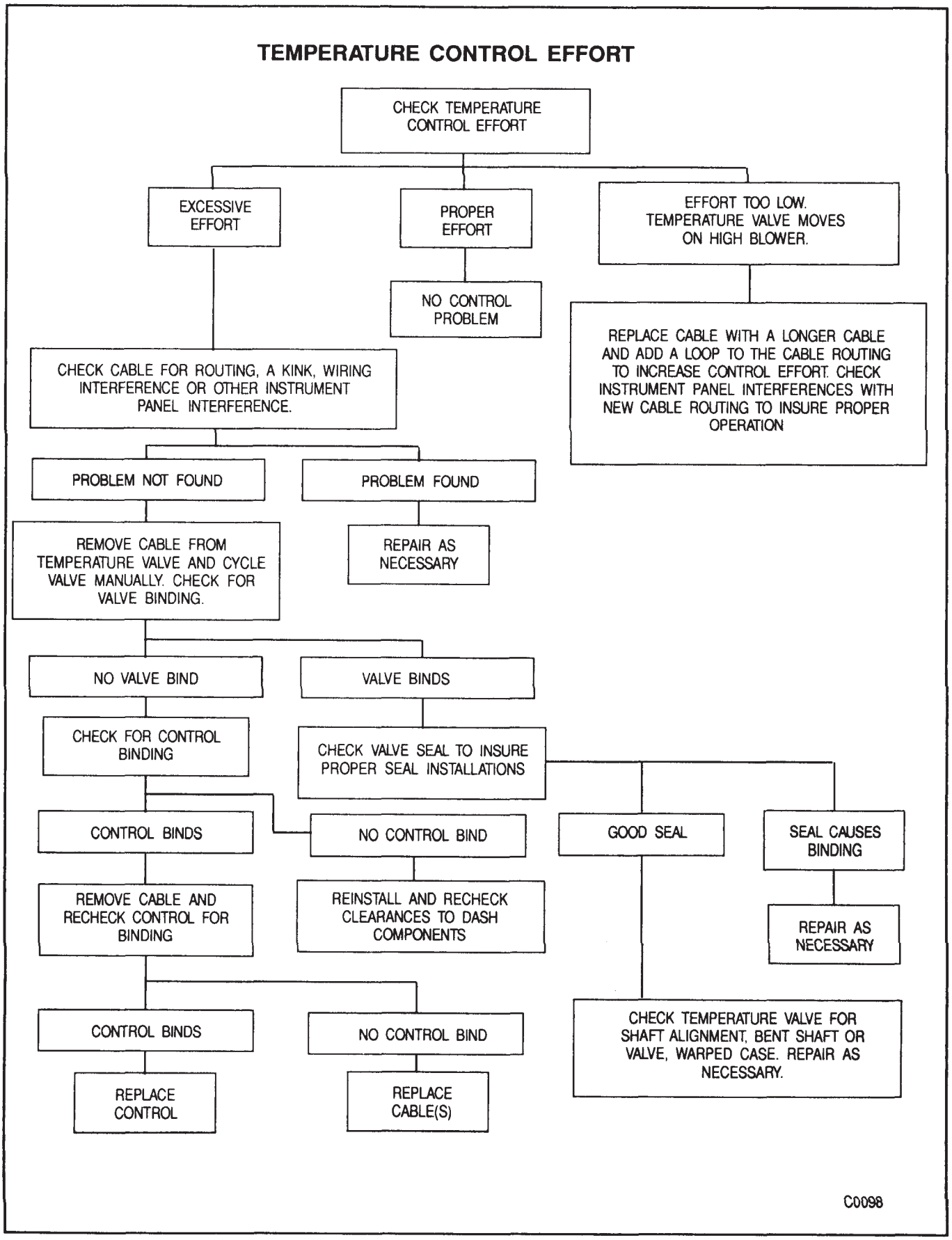

Figure 7—Temperature Control Effort Diagnostic Procedure

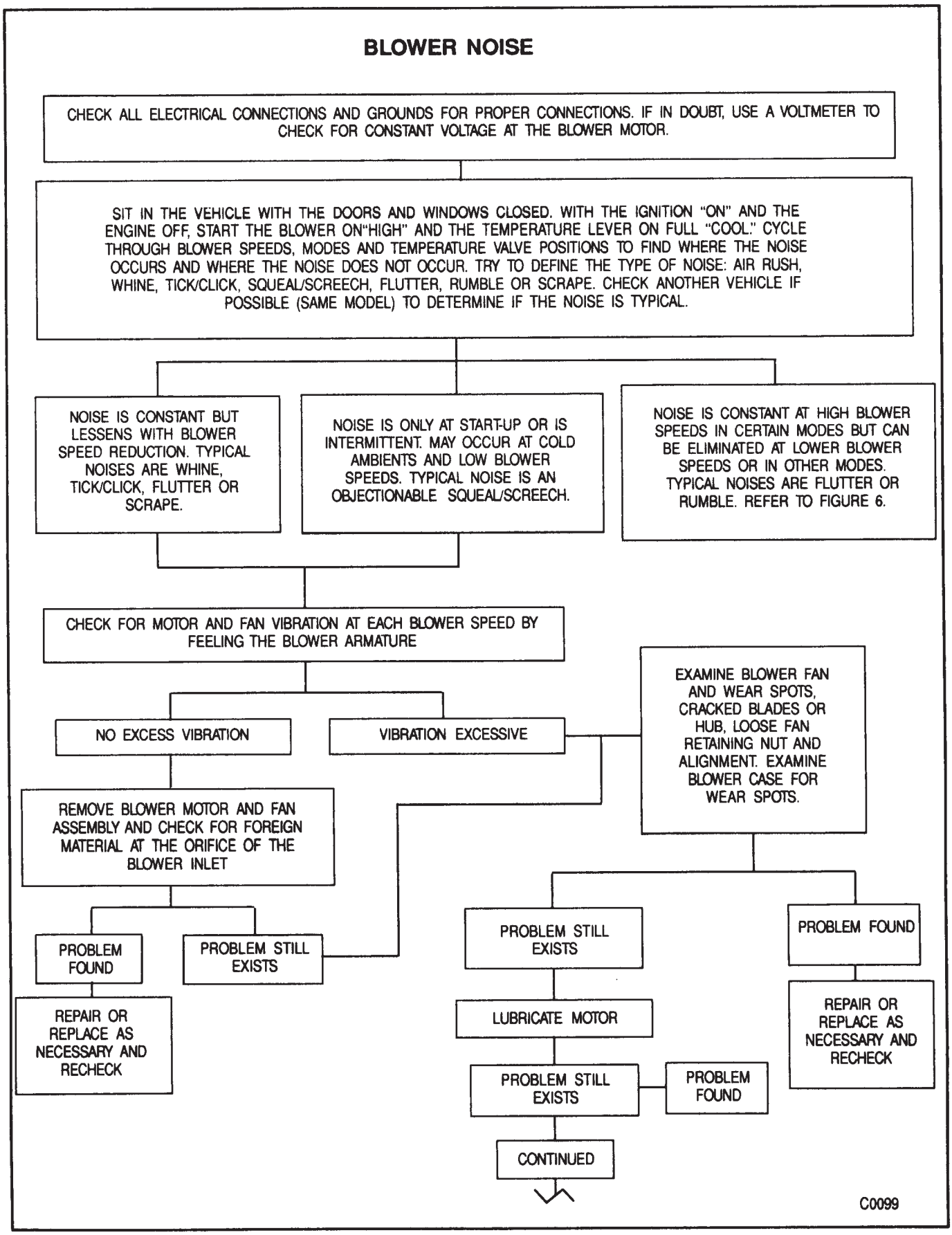

Figure 8—Blower Noise Diagnostic Procedure (1 of 2)

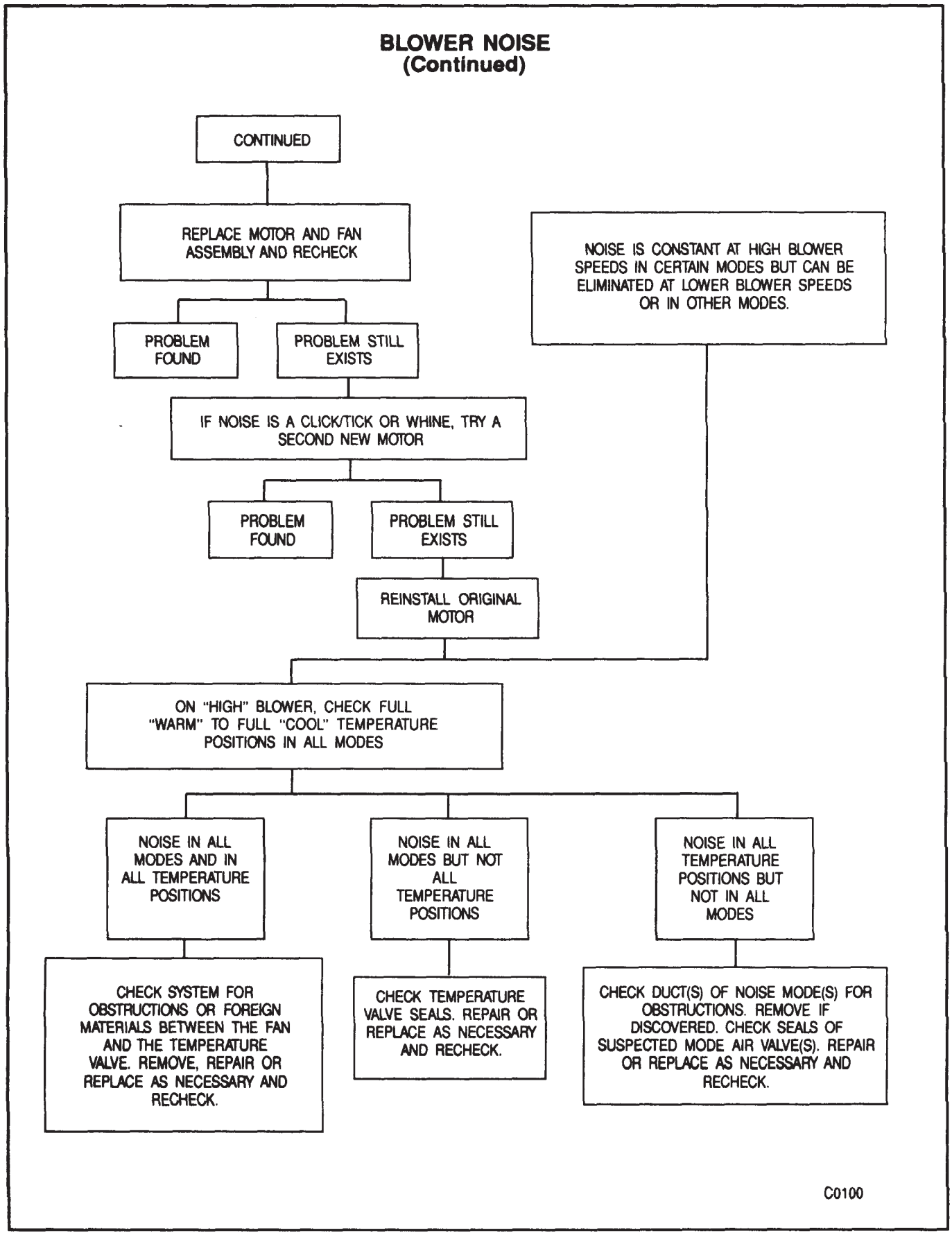

Figure 9—Blower Noise Diagnostic Procedure (2 of 2)

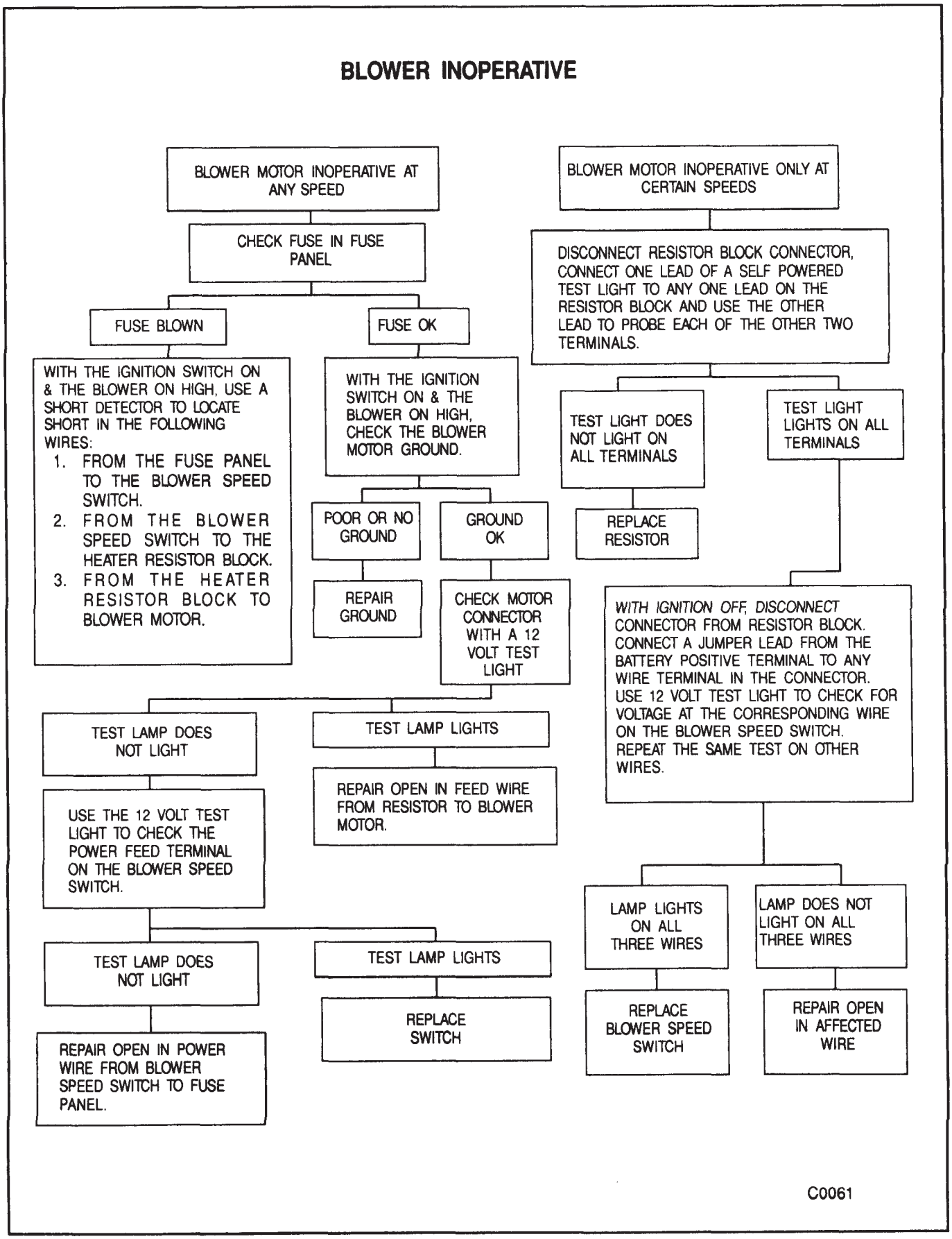

Figure 10—Blower Electrical Diagnosis Chart

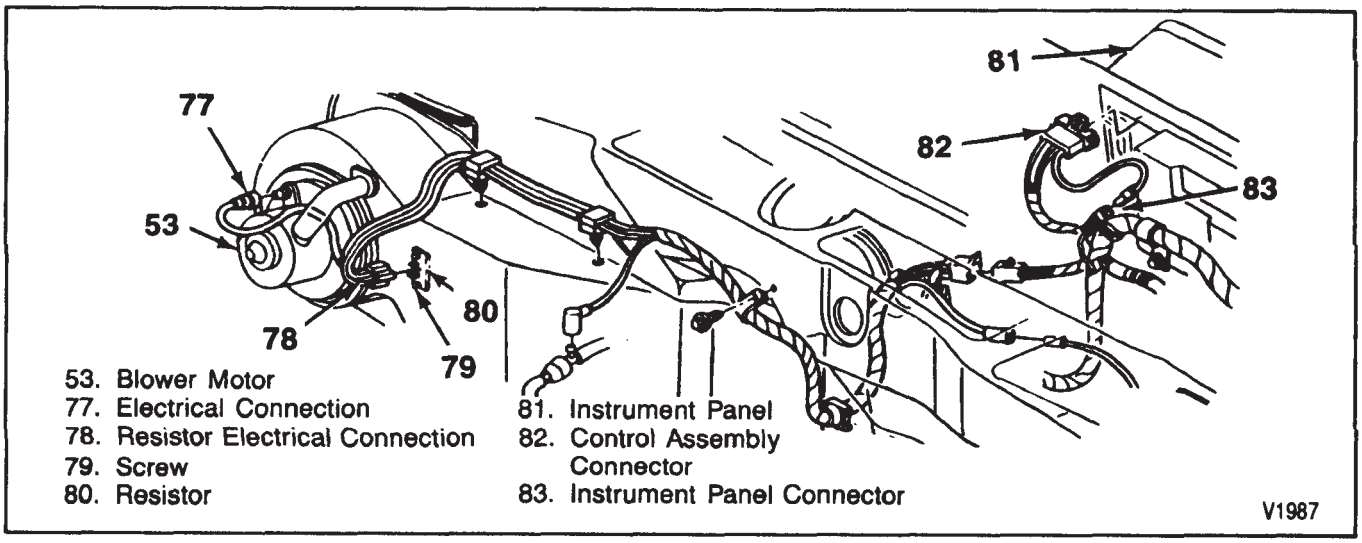

Figure 11—Wiring Harness Installation

ON-VEHICLE SERVICE

BLOWER MOTOR REPLACEMENT

Remove or Disconnect (Figures 11 and 12)

1. Electrical connector (77) from blower motor (53) (figure 11).
2. Blower motor flange screws (87) (figure 12).
3. Cooling tube.

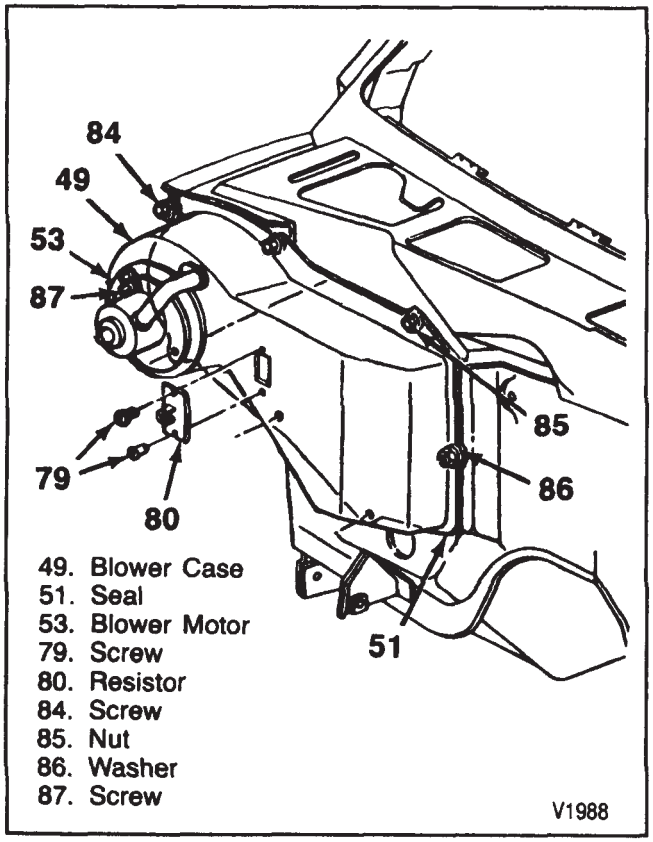

Figure 12—Blower Motor Case Assembly

4. Blower motor (53).
5. Blower motor fan. Refer to "Blower Motor Fan Replacement" in this section.

Inspect

- Blower motor terminals for corrosion. Clean corrosion from the terminals or replace the blower motor (53) as necessary.
- Flange of the blower motor (53) for damage or distortion that could cause an air leak. Repair as necessary.
- Blower fan for damage and distortion. Repair or replace as necessary.

Install or Connect (Figures 11 and 12)

1. Blower motor fan. Refer to "Blower Motor Fan Replacement" in this section.
2. Blower motor (53).
3. Cooling tube.

NOTICE: See "Notice" on page 1A-1 of this section.

4. Blower motor flange screws (87) (figure 12).

Tighten

- Screws (87) to 2 N·m (18 in. lb.).

5. Electrical connector (77) to blower motor (53) (figure 11).
   - Check circuit operation.

BLOWER MOTOR FAN REPLACEMENT

Remove or Disconnect (Figure 13)

1. Blower motor and fan assembly. Refer to "Blower Motor Replacement" in this section.

2. Using a hot knife, cut a slot in cage motor shaft sleeve in three places. Starting 12.7 mm (1/2 inch) from base of shaft, start cut from fan dome and continue to cut through the plastic material to the end of the shaft so that the fan splits from the shaft.
3. Fan cage from blower motor shaft by pulling straight out.

Alternative Removal Methods

1. Using small wheel puller:
   - Remove tip of fan at end of motor shaft using soldering iron or cutting pliers.
   - Draw fan from motor shaft using a small puller. Hook legs of puller between fan lower rib and motor mounting plate. Thread center post of puller against the end of the motor shaft exposed in the above step.
2. Using drill press or arbor press:
   - Remove tip of fan at end of motor shaft using soldering iron or cutting pliers.
   - Support fan with blocks, angle iron, etc. while allowing the motor to be suspended (figure 13).
   - Place steady pressure on tip of motor shaft, with a drill press or small arbor press and pin arrangement. Motor should fall freely from the fan after moving motor shaft about 12.7 mm (1/2 inch).

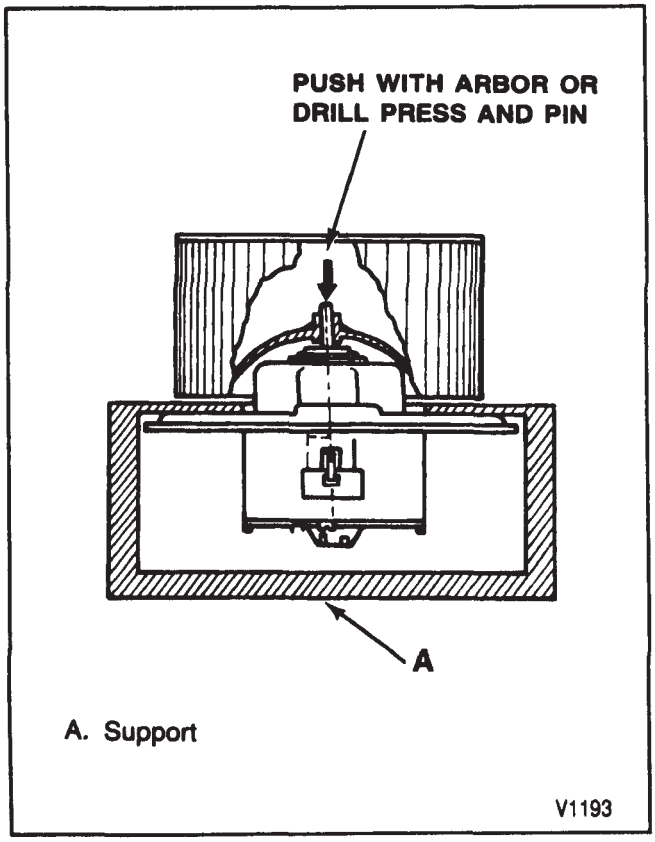

Figure 13—Push On Fan-Removal Procedure

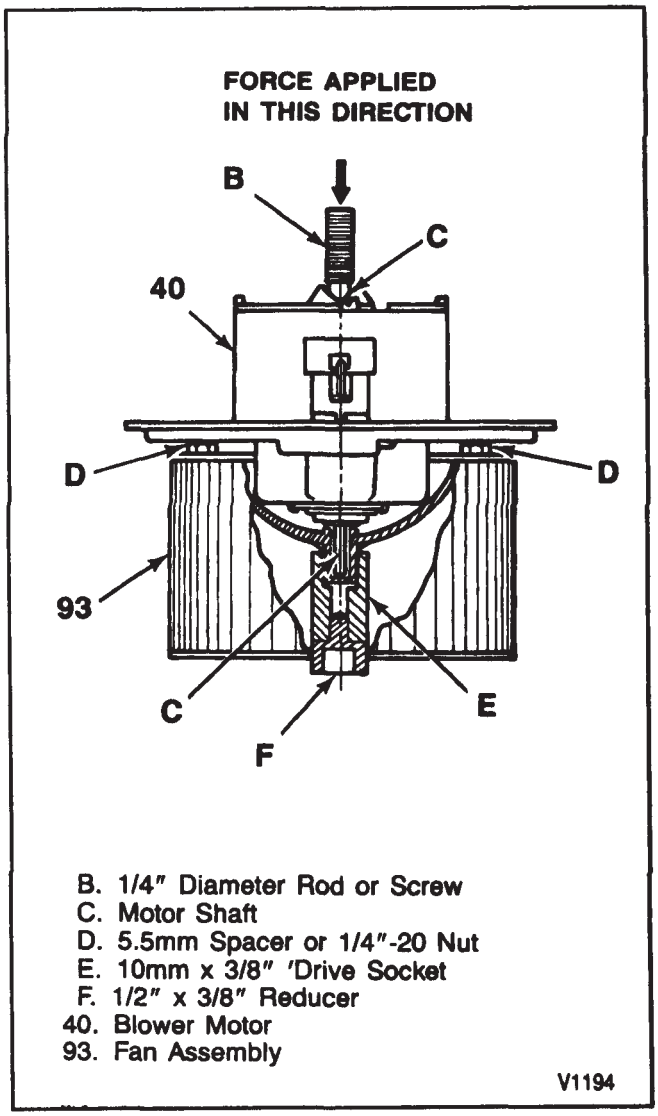

Figure 14—Push On Fan-Assembly Procedure

NOTICE: Do not use force on motor to remove or install fan. Do not apply force to motor housing to seat fan on motor, or force motor/shaft bearing damage could result. Do not apply pressure to fan rim. Be sure correct replacement part is used.

Install or Connect (Figure 14)

1. Press fan onto shaft.
   - Grasp fan by dome and apply hand pressure to fan dome, insert fan on motor shaft until slightly seated on shaft.
   - Place fan and motor on a combination of 10 mm x 3/8" drive socket and 1/2" x 3/8" reducer (figure 14).
   - While steadying the fan and motor, apply steady force to rear of motor shaft using a drill press or small arbor press and pin.

Adjust

- Fan cage, using spacers, to a clearance of 5.5 mm (0.22 inches) to motor mount plate.

2. Blower motor and fan assembly. Refer to "Blower Motor Replacement" in this section.
   - Check circuit operation.

BLOWER MOTOR RESISTOR REPLACEMENT

Remove or Disconnect (Figures 11 and 12)

1. Electrical connection (78) from resistor (80).
2. Screws (79) (figure 12).
3. Resistor (80) from blower case (49).

Install or Connect (Figures 11 and 12)

1. Resistor (80) to blower case (49).

NOTICE: See "Notice" on page 1A-1 of this section.

2. Screws (79) (figure 12).

Tighten

   - Screws (79) to 2 N·m (18 in. lb.).
3. Electrical connector (78) to resistor (80) (figure 11).
   - Check circuit operation.

HEATER HOSE REPLACEMENT

The heater inlet hose is routed from the intake manifold to the inlet pipe of the heater core. The heater outlet hose is routed from the outlet pipe of the heater core to the inlet fitting of the coolant pump. Hoses are attached at each end with screw-type clamps.

Remove or Disconnect (Figures 15 through 21)

1. Engine coolant.
   - Drain enough coolant into a clean container to lower the coolant level below the level of the lowest heater hose fitting.
2. Inlet and outlet hoses (72 and 70) at fittings.
   - Loosen the clamp screws enough to slide the clamps away from the fittings on the inlet and outlet hoses (72 and 70).
   - Remove the hose end by twisting and pulling.

NOTICE: The heater core can be damaged if too much force is applied on the core tubes during removal. If the heater hose will not come off easily, cut off the hose forward of the heater core tube. Cut the hose remaining on the core tube lengthwise to remove it.

3. Hose support clamps, brackets and/or retainers, as necessary.
4. Heater hose(s) (72 and 70) and clamps.

Install or Connect (Figures 15 through 21)

1. Heater hose(s) (72 and 70) and clamps.

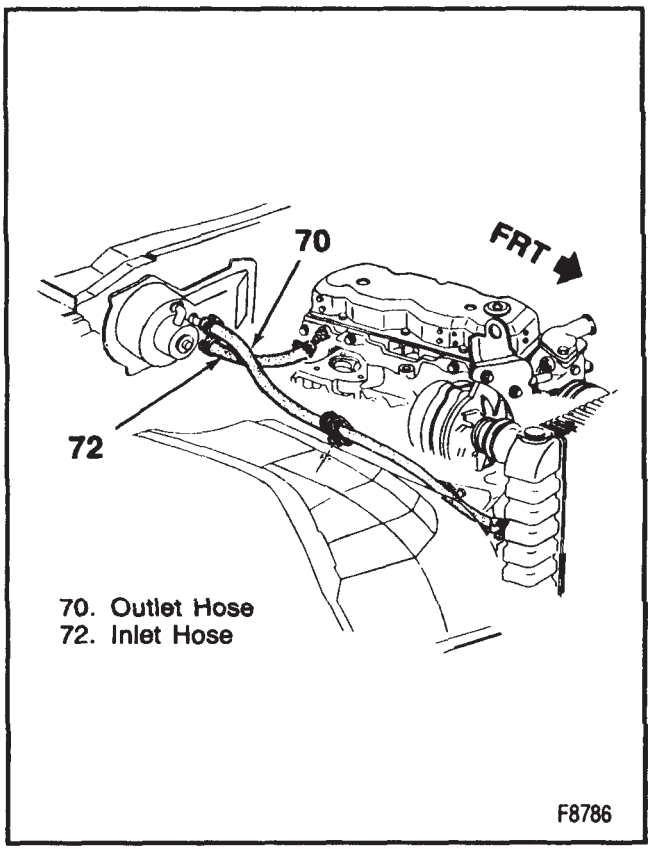

Figure 15—2.5L Engine Heater Hose Routing (w/o Air Cond.)

2. Hose support clamps, brackets and/or retainers, if removed.
3. Inlet and outlet hoses (72 and 70) to fittings.
   - Apply rubber lubricant to the inside diameter of hose ends, if desired.
   - Slip a new hose clamp over one end of the hose and push the hose onto the heater pipe with a twisting motion.

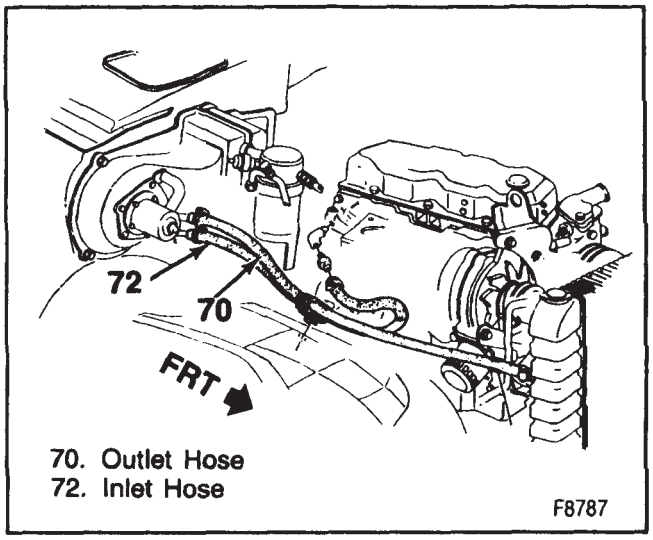

Figure 16—2.5L Engine Heater Hose Routing (w/ Air Cond.)

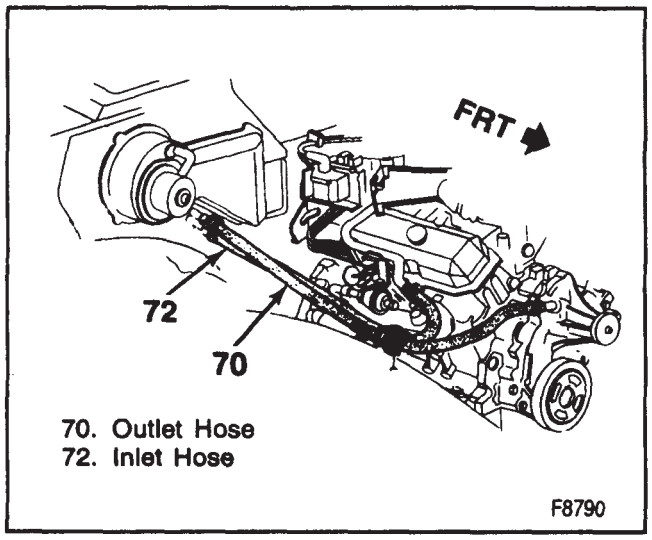

Figure 17—2.8L Engine Heater Hose Routing (w/o Air Cond.)

- Repeat the hose and clamp installation procedure at the other end of the hose.

Tighten

- Clamp screw to 1.7 N·m (15 in. lb.).

4. Engine coolant.
   - Use the coolant drained earlier only if it is uncontaminated. Discard contaminated coolant and add fresh 50/50 coolant and water mixture.

Inspect

- Be sure the installed hose(s) do not sag or rub against other components. Adjust or support the hose as necessary to correct.
- Operate the engine and check the hose installation for leaks.
- Tighten the hose clamp screw a bit at a time, if necessary, to stop a leak.
- Check the coolant level after the engine has been warmed up and allowed to cool. Add coolant as required.

BLOWER CASE REPLACEMENT

Remove or Disconnect (Figures 2 and 12)

1. Engine coolant.
   - Drain enough coolant into a clean container to lower the coolant level below the level of the lowest heater hose fitting.
2. Electrical connectors from blower motor (53) and resistor (80).
3. Blower motor (53). Refer to "Blower Motor Replacement" in this section.
4. Ground strap.
5. Heater hoses (72 and 70).
6. Screws (84).
7. Nuts (86).
8. Blower case (49) and seal (51).

Install or Connect (Figures 2 and 12)

1. Blower case (49) and seal (51).

NOTICE: For steps 2 and 3, refer to "Notice" on page 1A-1 of this section.

2. Screws (84).

Tighten

- Screws (84) to 3 N·m (27 in. lb.).

3. Nuts (86).

Tighten

- Nuts (86) to 3 N·m (27 in. lb.).

4. Heater hoses (72 and 70).
5. Ground strap.
6. Blower motor (53). Refer to "Blower Motor Replacement" in this section.
7. Electrical connectors from blower motor (77) and resistor (78).
8. Engine coolant.
   - Use the coolant drained earlier only if it is uncontaminated. Discard contaminated coolant and add fresh 50/50 coolant and water mixture.

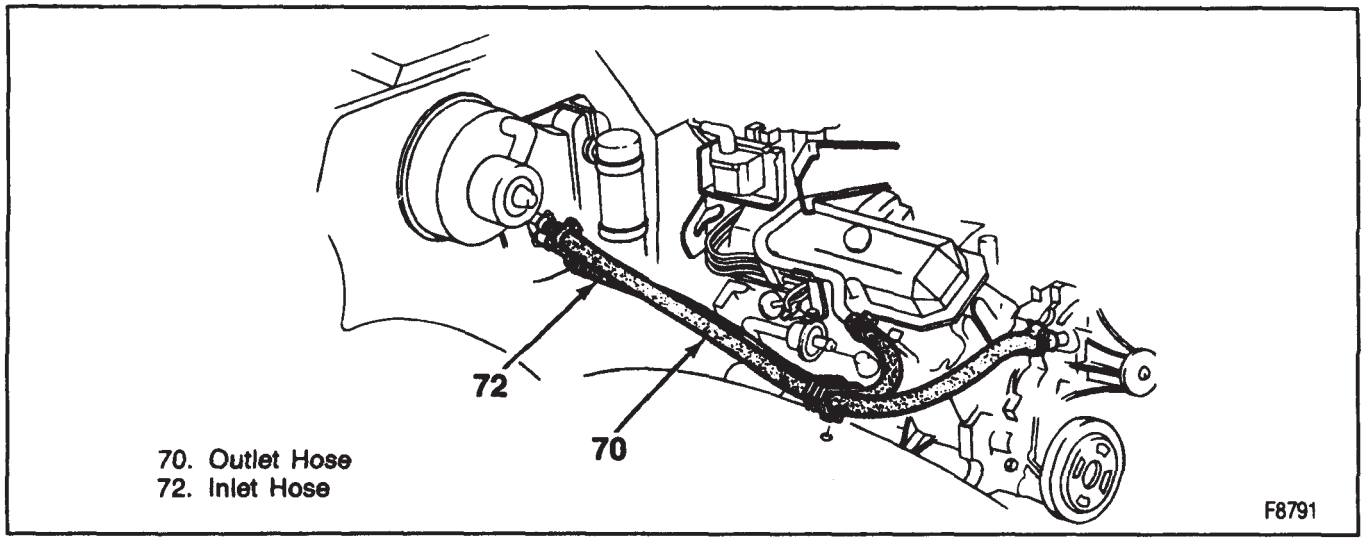

Figure 18—2.8L Engine Heater Hose Routing (w/ Air Cond.)

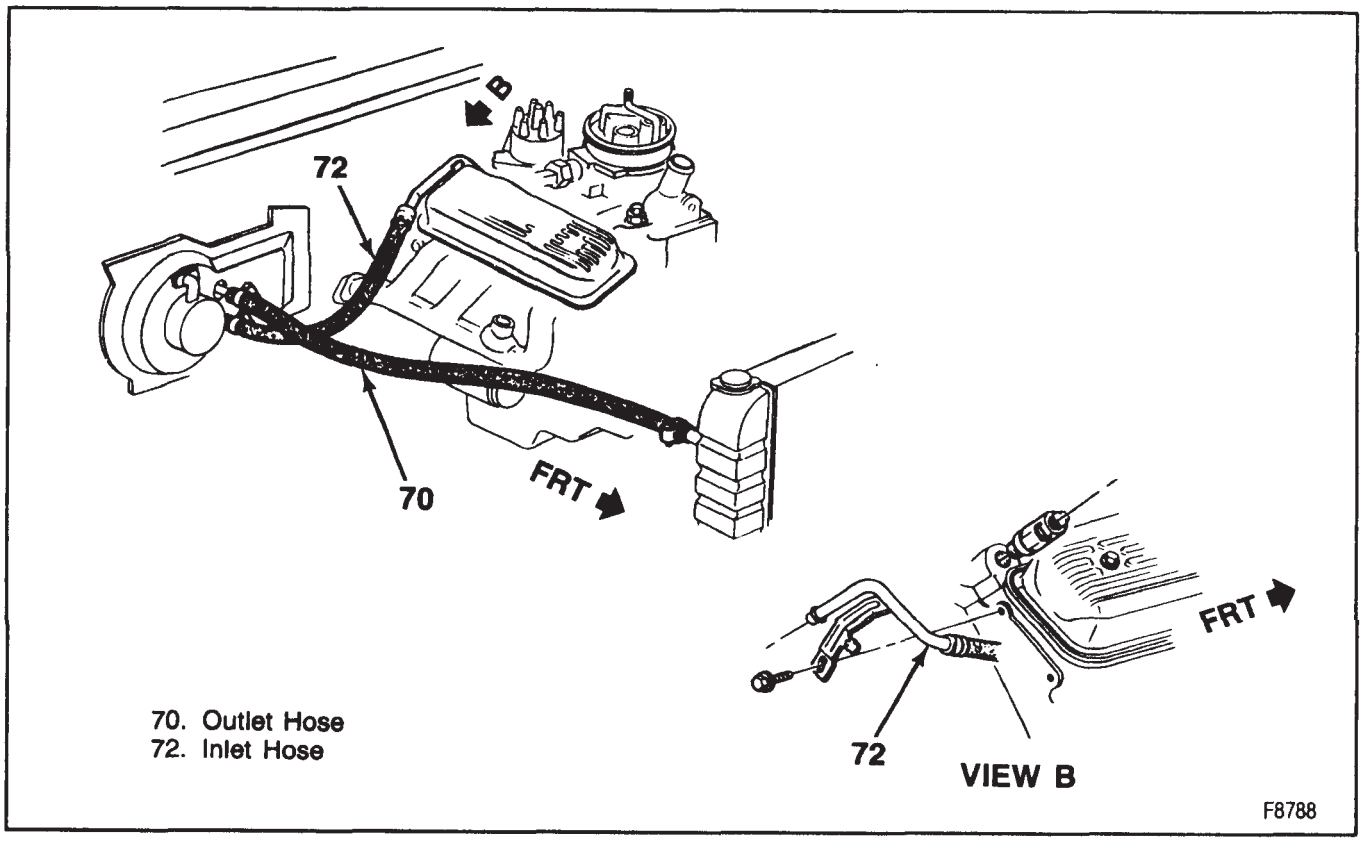

70. Outlet Hose
72. Inlet Hose

Figure 19—4.3L (VIN Z) Engine Heater Hose Routing (w/o Air Cond.)

HEATER CORE REPLACEMENT

Remove or Disconnect (Figures 2, 15 through 22)

1. Engine coolant.
   - Drain enough coolant into a clean container to lower the coolant level below the level of the lowest heater hose fitting.
2. Heater hoses (72 and 70) (figures 15 through 21).
3. Rear case screws (88) (figure 22).
4. Rear case (96).
5. Screws (94).
6. Brackets (93).
7. Heater core (92) from front case (100).
8. Seals (89 and 90).

Install or Connect (Figures 2, 15 through 22)

1. Seals (89 and 90).
2. Heater core (92) to front case (100).
3. Brackets (93).

NOTICE: For steps 4 and 6, refer to "Notice" on page 1A-1 of this section.

4. Screws (94).
5. Rear case (96).
6. Rear case screws (88) (figure 22).
7. Heater hoses (72 and 70) (figures 15 through 21).
8. Engine coolant.
   - Use the coolant drained earlier only if it is uncontaminated. Discard contaminated coolant and add fresh 50/50 coolant and water mixture.

CONTROL ASSEMBLY AND BLOWER SWITCH REPLACEMENT

Remove or Disconnect (Figures 11, 23, and 24)

1. Screws (64) (figure 23).
2. Control assembly (63).
   - Pull control assembly (63) out of the instrument panel far enough to reach the control cable assembly ends and the blower switch electrical connector.
3. Electrical connection (82) (figure 11).
4. Control cables (60 and 65) (figure 24).
5. Blower switch, if necessary.
   - Remove the blower switch knob and spring clip, and remove the blower switch.

Inspect

- Electrical terminals for corrosion. Remove the corrosion or replace the component as necessary.
- Temperature and mode levers for freedom of movement. Lubricate, repair or replace as necessary.
- Control cable assemblies for kinks, binding and other damage. Repair or replace as necessary.

Install or Connect (Figures 11, 23, and 24)

1. Heater blower switch, if removed.

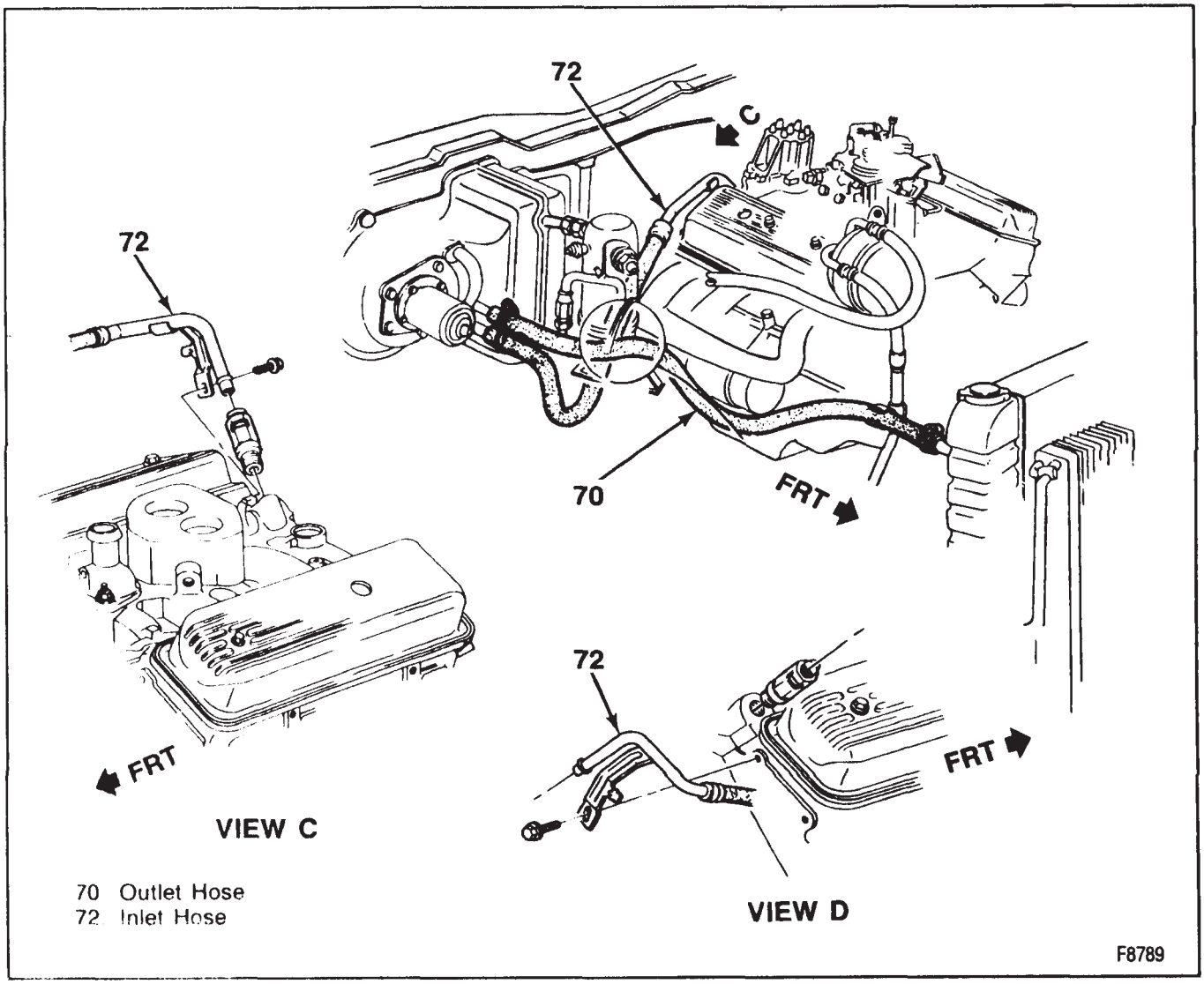

Figure 20—4.3L (VIN Z) Engine Heater Hose Routing (w/ Air Cond.)

- Hold the blower switch in position and install the spring clip.
- Install the blower switch knob.

2. Control cables (60 and 65) (figure 24).
3. Electrical connection (82) (figure 11).
4. Control assembly (63).

NOTICE: See "Notice" on page 1A-1 of this section.

5. Screws (64).
   - Check circuit operation.

TEMPERATURE AND VENT CABLE REPLACEMENT

Remove or Disconnect (Figures 23 and 24)

1. Control assembly (63). Refer to "Control Assembly and Control Switch Replacement" in this section.
2. Cables (60 and 65) at the control assembly (63) and heater assembly.
3. Cables (60 and 65).

Install or Connect (Figures 23 and 24)

1. Cables (60 and 65).
2. Cables (60 and 65) to the control assembly (63) and the heater assembly.
3. Control assembly (63). Refer to "Control Assembly and Control Switch Replacement" in this section.

TEMPERATURE AND DEFROSTER CABLE ADJUSTMENT

DEFROSTER CABLE

Adjust (Figure 24)

1. Remove the retainer from the lever.
2. Remove the cable.
3. Bend the cable to lengthen or shorten.

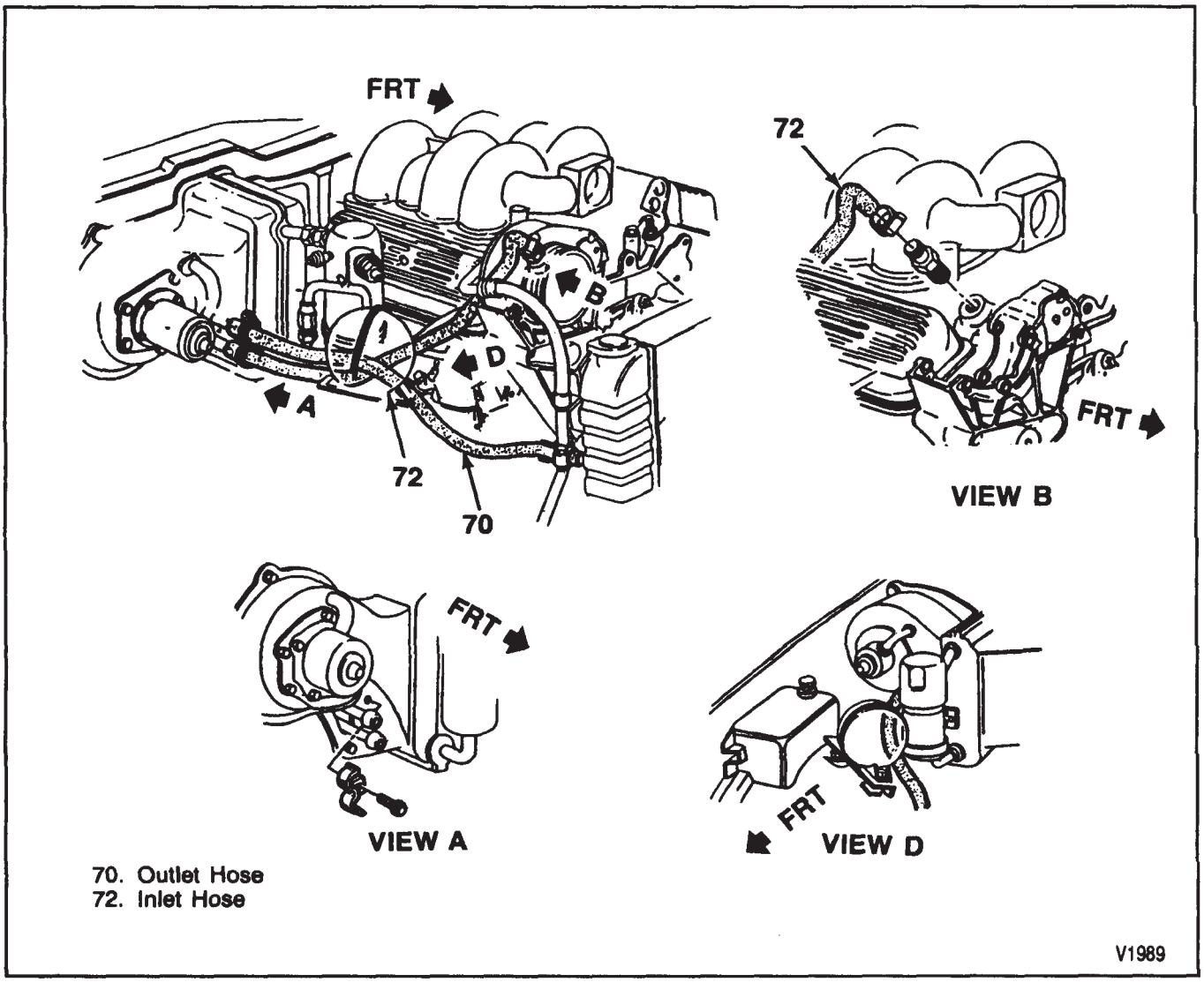

Figure 21—4.3L (VIN W) Engine Heater Hose Routing (w/ Air Cond.)

4. Reattach the cable to the lever and move the control lever in the full range of its travel and listen for the defroster door opening and closing. Adjust the cable as necessary.
5. Install the retainer.

TEMPERATURE CABLE

Adjust (Figure 24)

1. Remove the instrument panel storage compartment.
2. Remove the retainer from the lever.
3. Remove the cable.
4. Bend the cable to lengthen or shorten.
5. Reattach the cable to the lever and move the temperature lever in the full range of its travel and listen for the temperature door opening and closing. Adjust the cable as necessary.
6. Install the retainer.
7. Install the instrument panel storage compartment.

PLENUM SIDE VENT REPLACEMENT

Remove or Disconnect (Figure 25)

1. Front door sill plate. Refer to INTERIOR TRIM (SECTION 10A4).
2. Plenum side vent cover.
3. Bolts (102).
4. Vent (103).

Install or Connect (Figure 25)

1. Vent (103).

NOTICE: See "Notice" on page 1A-1 of this section.

2. Bolts (102).

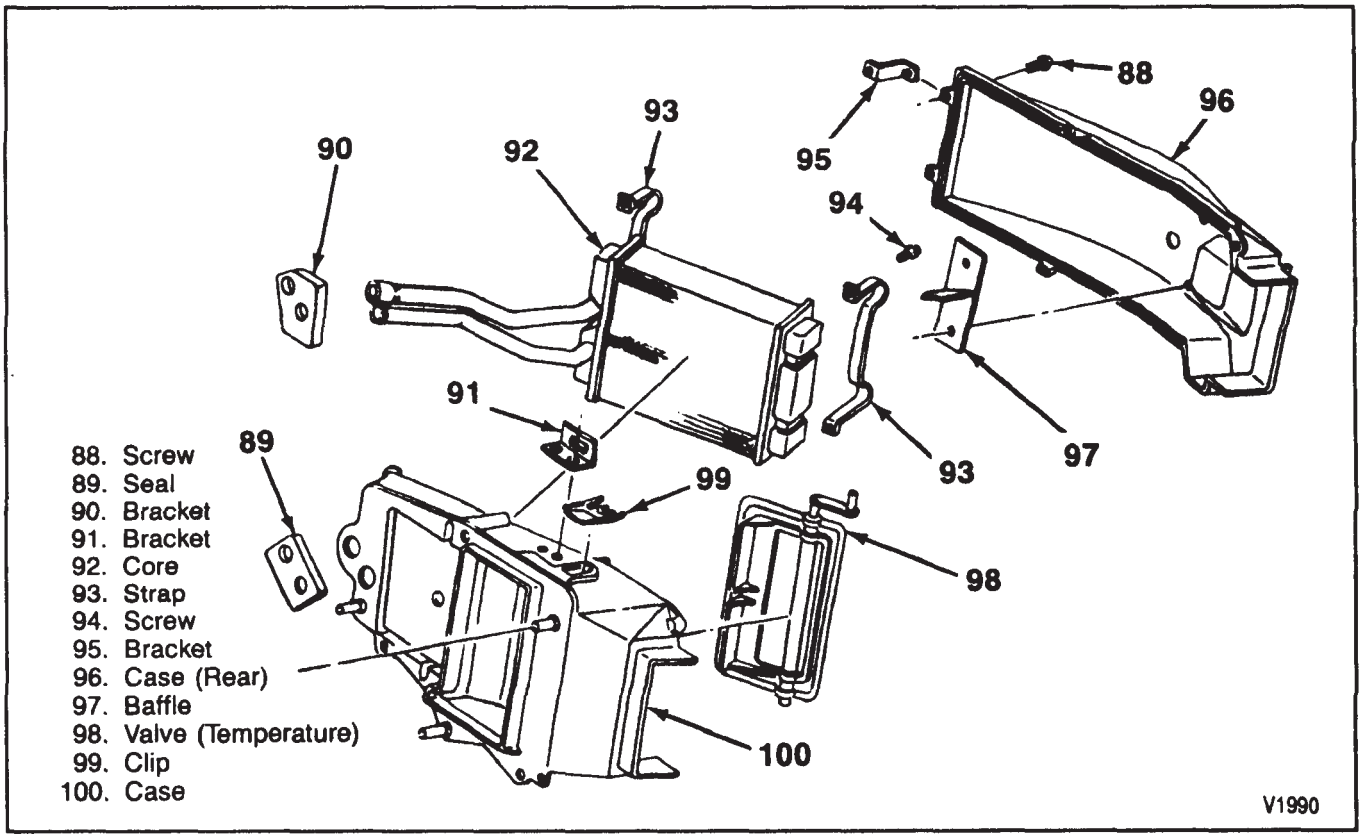

Figure 22—Heater Assembly Component View

Tighten

- Bolts (102) to 2 N·m (18 in. lb.).

3. Plenum side vent cover.
4. Front door sill plate. Refer to INTERIOR TRIM (SECTION 10A4).

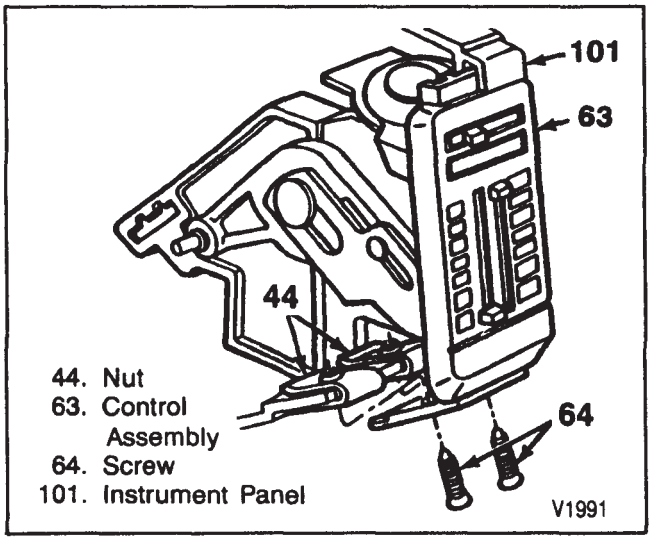

Figure 23—Control Assembly

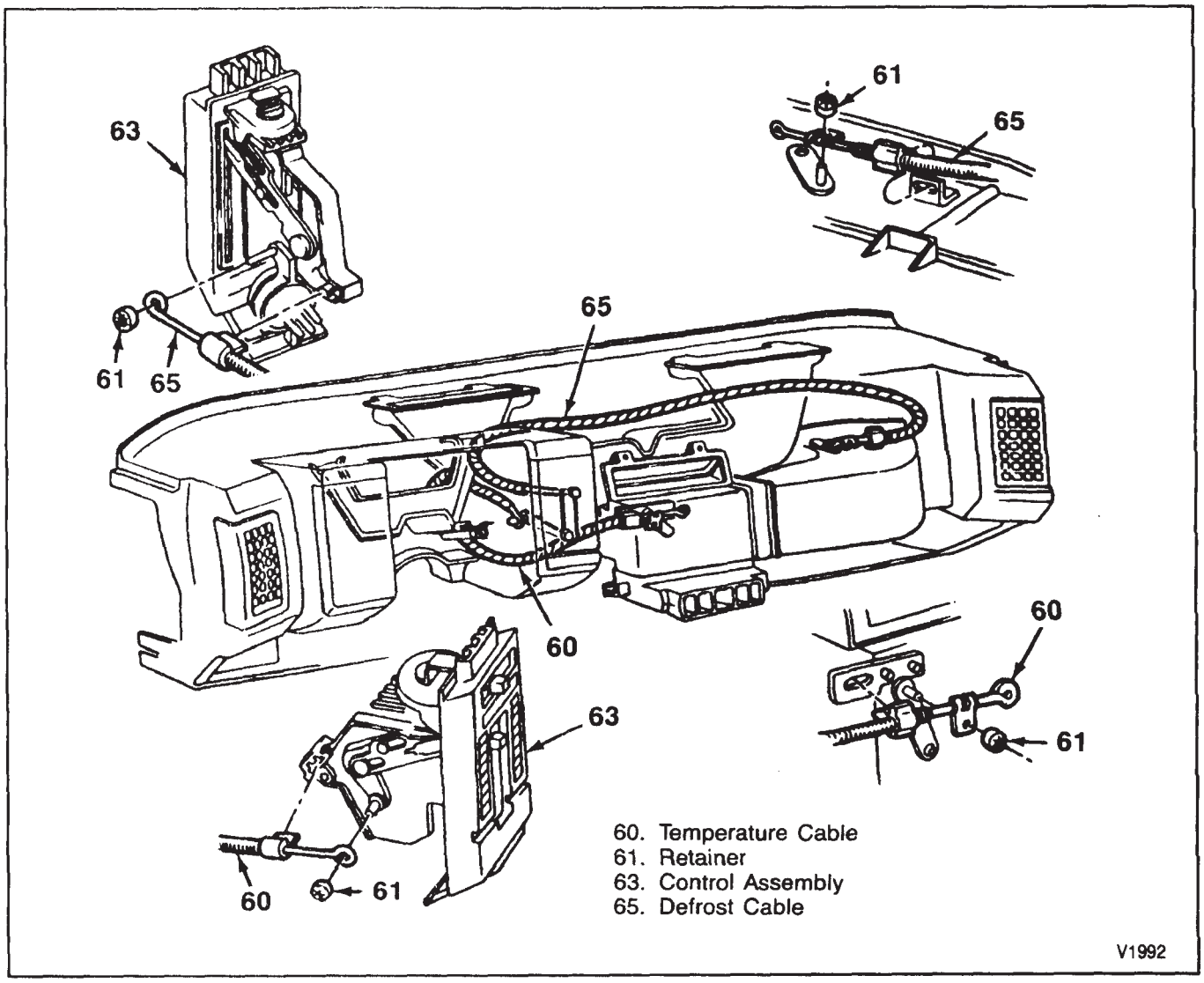

Figure 24—Control Cable

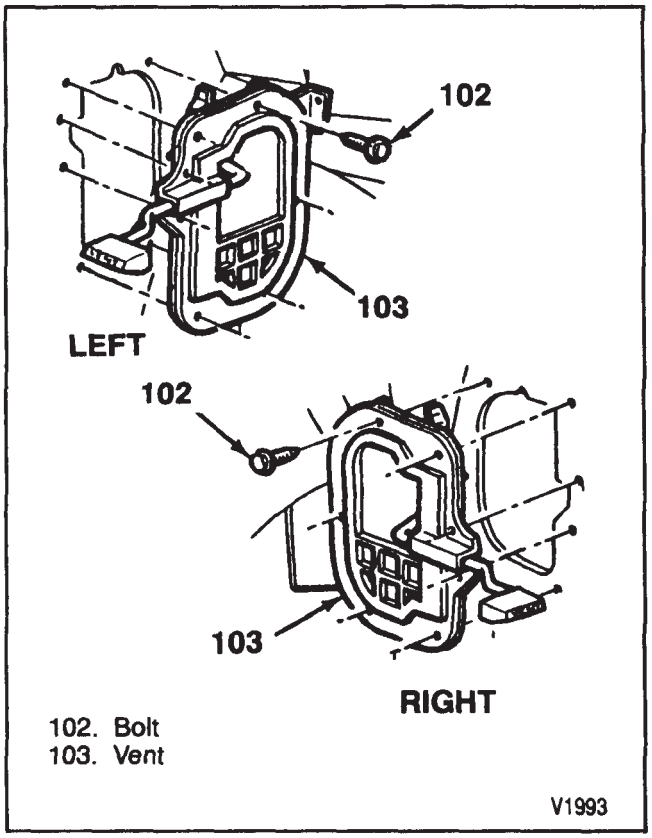

Figure 25—Plenum Side Vent

SPECIFICATIONS

FASTENER TIGHTENING SPECIFICATIONS

ITEM	N·m	In. Lbs.
Blower Motor Mounting Screw	2	18
Blower Motor Resistor Mounting Screw	2	18
Heater Hose Clamp Screw	1.7	15
Blower Motor Case Screw	3	27
Blower Motor Case Nut	3	27
Plenum Side Vent Mounting Screw	2	18

T2730

SECTION 1B

AIR CONDITIONING

***NOTICE:** When fasteners are removed, always reinstall them at the same location from which they were removed. If a fastener needs to be replaced, use the correct part number fastener for that application. If the correct part number fastener is not available, a fastener of equal size and strength (or stronger) may be used. Fasteners that are not reused, and those requiring thread locking compound will be called out. The correct torque value must be used when installing fasteners that require it. If the above conditions are not followed, parts or system damage could result.*

CONTENTS

SUBJECT	PAGE
General Description	1B- 2
CCOT A/C System	1B- 2
VDOT A/C System	1B- 3
CCOT/VDOT System Differences	1B- 3
Controls	1B- 3
Air Distribution System	1B- 3
Ducts and Outlets	1B- 3
Refrigeration System	1B- 3
Refrigerant System Diagnosis	1B- 5
Inspection of the Refrigerant System	1B- 5
Leak Testing the Refrigerant System	1B- 5
System Performance Test	1B- 6
Insufficient Cooling "Quick-Check" Procedure	1B- 6
CCOT A/C System Diagnostic Charts	1B- 7
VDOT A/C System Diagnostic Charts	1B- 7
Electrical/Vacuum System Diagnosis	1B-21
Operational Test	1B-21
Electrical System	1B-21
Vacuum System	1B-21
Service Procedures	1B-24
Service Precautions	1B-24
O-Ring Replacement	1B-24
Handling Refrigerant-12	1B-24
Handling of Refrigerant Lines and Fittings	1B-25
Maintaining Chemical Stability	1B-25
Refrigerant and Oil Capacity	1B-26
Refrigerant Recovery and Recycling, Adding Oil, Evacuating and Charging Procedures	1B-26
Refrigerant Recovery and Recycling	1B-26
Station (ACR) Setup and Maintenance	1B-26
Diagnosis of the Refrigerant Recovery and Recycling System	1B-31
Adding Oil	1B-31
Refrigerant Oil Distribution	1B-32
Evacuating and Charging	1B-32
Gage Calibration	1B-32
Vacuum System Check	1B-32
Charging Station Method	1B-32
Refrigerant Drum Method	1B-32
Charging	1B-33
On Vehicle Service	1B-33
Compressor Replacement	1B-33
Evaporator Tube Replacement	1B-34
Compressor Relay Replacement	1B-37
Condenser Replacement	1B-37
Accumulator Replacement	1B-38

CONTENTS (cont'd)

SUBJECT	PAGE
Expansion Tube (Orifice) Replacement	1B-38
Heater Hose Replacement	1B-40
Blower Motor Replacement	1B-40
Blower Motor Fan Replacement	1B-40
Blower Motor Relay Replacement	1B-41
Blower Motor Resistor Replacement	1B-41
Evaporator and Blower Assembly Replacement	1B-41
Evaporator Core Replacement	1B-42
Control Assembly Replacement	1B-43
Temperature Cable Adjustment	1B-43
Vacuum Tank Replacement	1B-43
Vacuum Lines—Engine Compartment	1B-45
Air Inlet Valve Assembly Replacement	1B-45
Plenum Side Vent Actuator Replacement	1B-45
Specifications	1B-48
Special Tools	1B-49

GENERAL DESCRIPTION

Passenger compartment comfort is maintained by the mix of cooled ambient air and heated air as controlled by the temperature lever on the instrument panel.

Two different air conditioning systems are available depending upon engine application.

1. The Variable Displacement Orifice Tube (VDOT) refrigerant system is used when equipped with:
   - 2.5L VIN A
2. The Cycling Clutch Orifice Tube (CCOT) refrigerant system is used when equipped with:
   - 2.8L VIN R
   - 4.3L VIN Z
   - 4.3L VIN W

All air conditioning systems that use the fixed displacement R-4 compressor are referred to as CCOT (Cycling Clutch Orifice Tube) type systems. Air conditioning systems that use the constant run V-5 compressor are referred to as VDOT (Variable Displacement Orifice Tube) refrigerant systems. The two systems are described below.

CCOT A/C SYSTEM

The Cycling Clutch Orifice Tube (CCOT) refrigerant system is designed to cycle a compressor on and off to maintain desired cooling and to prevent evaporator freeze-up. Passenger compartment comfort is maintained by the temperature selector on the controller.

Control of the refrigeration cycle (on and off operation of the compressor) is done with a switch which senses low side pressure as an indicator of evaporator pressure. The cycling pressure switch is the freeze protection device in the system and senses refrigerant pressure on the suction side of the system. This switch is located on a standard Schrader-type valve low-side fitting. During air temperatures of 16-26°C(60-80°F), the equalized pressures within the charged A/C system will close the contacts of the pressure switch. When an air conditioning mode is selected, electrical energy is supplied to the compressor clutch coil. As the compressor reduces the evaporator pressure to approximately 175 kPa (25 psi), the pressure switch will open, de-energizing the compressor clutch. As the system equalizes and the pressure reaches approximately 315 kPa (46 psi), the pressure switch contacts close, re-energizing the clutch coil. This cycling continues and maintains evaporator discharge air temperature at approximately 1°C (33°F). Because of this cycling, some slight increases and decreases of engine speed/power may be noticed under certain conditions. This is normal as the system is designed to cycle to maintain desired cooling, thus preventing evaporator freeze-up.

The high-side, high pressure compressor cut-off switch in the rear head of the compressor is a protective device intended to prevent excessive compressor head pressures and reduce the chance of refrigerant escaping through a safety relief valve. Normally closed, this switch will open the circuit at a high-side pressure of approximately 2960 kPa (430 psi) and reclose the circuit at approximately 1370 kPa (200 psi).

Additional compressor protection results from the operating characteristics of the low-side cycling pressure system. If a massive discharge occurs in the low side of the system or the orifice tube becomes plugged, low-side pressures could be insufficient to close the contacts of the pressure switch. In the event of a low charge, insufficient cooling accompanied by rapid compressor clutch cycling will be noticed at high air temperatures.

When the engine is turned "OFF" with the A/C system operating, the refrigerant in the system will flow from the high pressure side of the expansion tube (orifice) to the low pressure side until the pressure is equalized. This may be detected as a hissing sound for 30 to 60 seconds and is a normal condition.

VDOT A/C SYSTEM

The Variable Displacement Orifice Tube (VDOT) refrigerant system employs the constant run V-5 compressor. The V-5 is a variable displacement compressor that can match the air conditioning demand under all conditions without cycling. The basic compressor mechanism is a variable angle wobble-plate with 5 axially oriented cylinders. The center of control of the compressor displacement is a bellows actuated control valve located in the rear head of the compressor that senses compressor suction pressure. The wobble-plate angle and compressor displacement are controlled by the crankcase-suction pressure differential. When the A/C capacity demand is high, the suction pressure will be above the control point and the valve will maintain a bleed from crankcase to suction; when no crankcase-suction pressure differential exists, the compressor will have maximum displacement.

When the A/C capacity demand is lower and the suction pressure reaches the control point, the valve will bleed discharge gas into the crankcase and close off a passage from the crankcase to the suction plenum. The angle of the wobble-plate is controlled by a force balance on the 5 pistons. A slight elevation of the crankcase-suction pressure differential creates a total force on the pistons resulting in a movement about the wobble-plate pivot pin that reduces the plate angle.

When the engine is turned "OFF" with the A/C system operating, the refrigerant in the system will flow from the high pressure side of the orifice tube to the low pressure side until the pressure is equalized. This may be detected as a faint sound of liquid flowing (hissing) for 30 to 60 seconds and is a normal condition.

CCOT/VDOT SYSTEM DIFFERENCES

PRESSURE CYCLING SWITCH

The VDOT A/C systems use the constant run V-5 compressor. These systems DO NOT CYCLE. The pressure cycling switch is not used with the VDOT A/C systems because the compressor can vary its displacement to match the air conditioning demand under all conditions. The pressure cycling switch is still used with all CCOT type systems.

If replacement of the pressure cycling switch is necessary, it is important to note that this may be done without removing the refrigerant charge. A Schrader-type valve is located in the pressure switch fitting. During replacement of the pressure switch, a new "O" ring must be installed. The switch should be assembled to the specified torque of 10 N.m (89 in. lb.).

LOW PRESSURE CUT-OUT SWITCH

Because the pressure cycling switch is not used with the V-5 compressor, a low pressure cut-out switch is used to protect the compressor from a low charge condition. The low pressure cut-out switch is also used to shut the compressor off in cold weather.

CONTROLS

The operation of the air conditioning system is controlled by a switch and levers on the control assembly. The compressor clutch and blower motor are connected electrically to the control assembly by a wiring harness. The blower circuit is open in the "OFF" mode.

Air flow is provided by the four blower speeds available in the remaining modes. Cooled and dehumidified air is available in the "MAX," "BI-LEV," and "DEFROST" modes.

Temperature is controlled by the position of the temperature lever on the control assembly. A cable connects this lever to the temperature valve. It controls air flow through the heater core. As the temperature lever is moved through the its full travel, the cable at the temperature valve connection assures that the temperature valve will seat in both extreme positions. The position of the temperature valve is independent of mode selection. The temperature cable attaches to the air conditioning module.

The remaining functional assemblies are controlled the vacuum valve linked to the mode lever of the control assembly. This valve controls the supply of engine vacuum to the appropriate vacuum actuator(s) for the mode selected.

AIR DISTRIBUTION SYSTEM

Control of air through the system is regulated by vacuum. At various positions of the levers on the control head, mode doors mix and direct cooled, heated, and outside air through the air ducts.

Vacuum Lines

Vacuum lines are molded to a connector which is attached to a vacuum control switch on the control assembly.

In case of leakage or hose collapse, it will not be necessary to replace the entire harness assembly. Replacement can be made by cutting the hose and inserting a plastic connector. If the entire hose must be replaced, cut all hoses off at the connector and then attach hoses directly to the control assembly vacuum switch.

Vacuum Tank

During heavy acceleration, the vacuum supply from the intake manifold drops. Under load conditions a check valve in the vacuum tank maintains vacuum so that it will be available for future use. The vacuum tank is located in the engine compartment.

DUCTS AND OUTLETS

A system of ducts and outlets directs air to the passenger compartment. In cases of poor air output, defroster, heater, A/C, and vent ducts should be checked for obstructions such as leaves, dirt, or objects which may have fallen into the ducts from the passenger compartment.

REFRIGERATION SYSTEM

REFRIGERANT-12

Air conditioning systems contain Refrigerant-12, which requires special handling to avoid personal injury. Refer to "Handling Refrigerant-12" in this section for special handling instructions (figure 1).

COMPRESSOR

Both V-5 and the R-4 compressors are driven by a belt from the engine crankshaft through the compressor clutch pulley. The compressor pulley rotates freely, without turning the compressor shaft, until an electromagnetic clutch coil is energized. When voltage is applied to energize the clutch coil, a clutch plate and hub assembly is drawn rearward toward the pulley. The magnetic force locks the clutch plate and pulley together as one unit to drive the compressor shaft.

All replacement compressors from service parts will have 240 mL (8 fl. oz.) of oil in the crankcase, the oil must be drained and retained. Then replace the oil in the same amount as previously recorded from the old compressor.

PRESSURE RELIEF VALVE

The compressor is equipped with a pressure relief valve which is placed in the system as a safety factor. Under certain conditions, the refrigerant on the discharge side may exceed the designed operating pressure. To prevent system damage, the valve is designed to open automatically at approximately 3036 kPa (440 psi). Any condition that causes this valve to open should be corrected, and the refrigerant oil should be replaced as necessary.

ACCUMULATOR

The sealed accumulator assembly is connected to the evaporator outlet pipe. It functions as a liquid/vapor separator that receives refrigerant vapor, some liquid refrigerant and refrigerant oil from the evaporator. It only allows refrigerant vapor and oil to continue on to the compressor (figure 2).

At the bottom of the accumulator is the desiccant which acts as a drying agent for moisture that may have entered the system. An oil bleed hole is also located near the bottom of the accumulator outlet pipe to provide an oil return path to the compressor.

A low-side pressure Schrader-type valve service fitting is located near the top of the accumulator. A similar Schrader-type fitting is provided for mounting the pressure cycling switch. It is not necessary to discharge the system to replace the switch. The accumulator is serviced only as a replacement assembly.

EXPANSION (ORIFICE) TUBE

The plastic expansion tube, with its mesh screen and orifice, is located in the liquid line between the condenser and the evaporator. It provides a restriction to the high-pressure liquid refrigerant in the liquid line, metering the flow of refrigerant in the liquid line, metering the flow of refrigerant to the evaporator as a low-pressure liquid. The expansion tube and orifice are protected from contamination by filter screens on both inlet and outlet sides. The tube is serviced only as a replacement assembly (figure 3).

When the engine is turned "OFF" with the air conditioning operating, the refrigerant in the system will flow from the high-pressure side of the expansion tube (orifice) to the low-pressure side until the pressure is equalized. This may be detected as a faint sound of liquid flowing (hissing) for 30 to 60 seconds and is a normal condition.

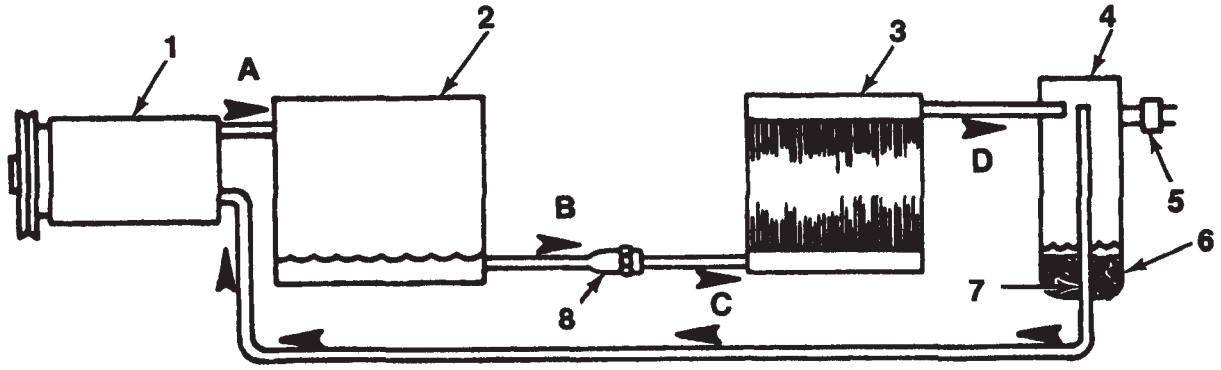

1. Compressor
2. Condeser
3. Evaporator
4. Accumulator
5. Pressure Cycling Switch
6. Dessicant Bag
7. Oil Bleed Hole
8. Expansion Tube (Orifice)

A. High Pressure Vapor
B. High Pressure Liquid
C. Low Pressure Liquid
D. Low Pressure Vapor

V1392

Figure 1—System Components

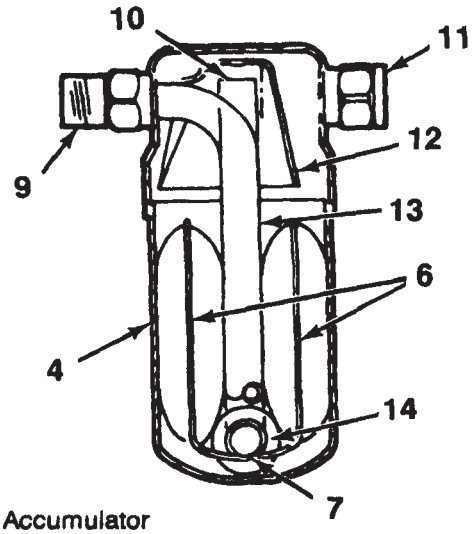

4. Accumulator
6. Dessicant Bag
7. Oil Bleed Hole
9. Outlet
10. Refrigerant Vapor Inlet
11. Inlet
12. Baffle
13. Internal Tube
14. Filter Assembly

V1393

Figure 2—Accumulator

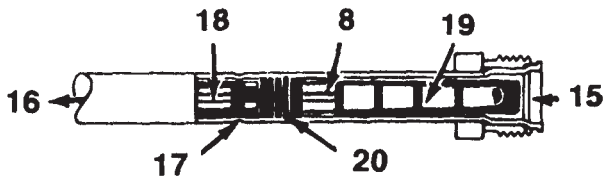

8. Expansion Tube (Orifice)
15. Inlet
16. Outlet (To Evaporator)
17. Dent on Tube (Retains the Expansion Tube)
18. Outlet Screen
19. Inlet Screen
20. O-Ring

V1394

Figure 3—Expansion (Orifice) Tube

CONDENSER

The condenser assembly in front of the radiator is made up of coils, which carry the refrigerant and cooling fins to provide rapid transfer of heat. The air passing through the condenser cools the high-pressure refrigerant vapor, causing it to condense into a liquid.

COOLANT FAN

The coolant fan operation is crucial to the proper operation of the A/C system. The coolant fan ensures the proper amount of air flow across the condenser throughout the vehicles operating range.

The fan operation should be checked during any A/C diagnosis procedure. Special attention should be given to the fan whenever excessive high-side pressures are encountered, the high-pressure relief valve discharges, or if the high-side high-pressure cut-off switch opens.

EVAPORATOR

The evaporator is a device which cools and dehumidifies the air before it enters the vehicle. High pressure liquid refrigerant flows through the orifice tube into the low-pressure area of the evaporator. The heat in the air passing through the evaporator core is lost to the cooler surface of the core, thereby cooling the air. As the process of heat loss from the air to the evaporator core surface is taking place, any moisture (humidity) in the air condenses on the outside surface of the evaporator core and is drained off as water.

HEATER CORE

In any air conditioning mode, the heater core can be used to heat the cool dehumidified air to achieve the desired temperature. The position of the control assembly temperature lever will determine how much heat will be added to the incoming air.

REFRIGERANT SYSTEM DIAGNOSIS

INSPECTION OF THE REFRIGERANT SYSTEM

If a malfunction is suspected due to abnormal system pressures, check the following:

1. Outer surfaces of radiator and condenser cores to be sure air flow is not blocked by dirt, leaves or other foreign material. Be sure to check between the condenser and radiator as well as the outer surfaces.
2. Restrictions or kinks in the condenser core, hoses, tubes, etc.
3. Blower fan operation.
4. Refrigerant leaks.
5. All air ducts for leaks or restrictions. Low air flow rate may indicate a restricted evaporator core.
6. Compressor clutch slippage.
7. Improper drive belt tension.
8. Plugged accumulator or expansion (orifice) tube.
9. Excessive moisture in the refrigerant system.
10. Cooling fan for normal operation.
11. Coolant thermostat for normal operation.

LEAK TESTING THE REFRIGERANT SYSTEM

Test for leaks whenever a refrigerant leak is suspected and when performing a service operation which disturbs lines or connections.

ACCESS FITTING CAPS

All GM high side and low side access fittings are supplied with a black plastic cap and seal assembly which provide the primary refrigerant seal for the service fittings.

If the cap and seal assembly is missing or loose, a significant amount of refrigerant may leak through the valve core, located in the access fitting, which can result in loss of A/C system cooling.

When servicing the vehicle's A/C system, make sure all access fitting cap seals are in place and tight. Cap seals should be threaded until contact with O-ring seal is made and then tightened 1/4—1/2 additional turn to insure a proper seal.

LIQUID LEAK DETECTORS

There are a number of locations (fittings, valves, etc.) on the air conditioning system where a liquid leak detector solution may be used to pinpoint refrigerant leaks.

When the test solution is applied to the suspected area (using the swab attached to the bottle cap) bubbles will form within seconds if there is a leak.

For areas with restricted access (such as sections of the evaporator and condenser) an electronic leak detector is more practical for determining and locating leaks.

ELECTRONIC LEAK DETECTORS

Electronic leak testers can accurately determine leaks in areas that are difficult to test due to poor visibility or inaccessibility.

The H-10 Leak Detector J 26934 is a 110-volt, A/C powered tester while the Autobalance Refrigerant Leak Detector J 38505 is a portable, battery operated model. Both models provide visual and/or audible signals to indicate leak detection.

The successful use of electronic leak detectors depends upon carefully following the manufacturers instructions regarding calibration, operation and maintenance. Battery condition is especially important to the accuracy of the portable battery powered model J 38505 and is monitored by a low battery indicator.

SYSTEM PERFORMANCE TEST

Tool Required:
J 21213-A Four Jack-Dual Range Temperature Tester or Equivalent

1. Park vehicle inside or in a shaded area.
2. Open doors or windows to ventilate interior.
3. Vent engine exhaust if necessary.
4. Open hood and install high and low side pressure gages. Route lines over rear hood seal and tape gages to windshield for viewing.
5. Close hood.
6. Record ambient temperature at vehicle.
7. Record relative humidity. Use a psychrometer or consult local weather bureau.

Important

- Be sure to record relative humidity and ambient temperature conditions at time of test.

8. Close doors or windows.
9. Set mode control to "A/C" with blower control on high and temperature control on full cold.
10. Open A/C outlets.
11. Install J 21213-A or equivalent into right center A/C outlet.
12. Place transmission in "Park" or "Neutral".
13. Start engine, stabilize at 2000 rpm and start timer.
14. Run A/C system until outlet air reaches the lowest temperature (about 3 minutes).
15. *Record outlet air temperature and high side and* low side pressures.
16. Turn engine off and compare readings. Normally operating A/C systems should not exceed the levels shown in the following table.

Condenser Inlet Temperature	21°C (70°F)	26°C (80°F)	32-43°C (90-110°F)
Instrument Panel	-11°C	14°C	-17°C
Right Outlet Temperature (Minimum Drop)	(12°F)	(7°F)	(1.5°F)
			T2051

INSUFFICIENT COOLING "QUICK-CHECK" PROCEDURE

Use the following "Hand-Feel" procedure to quickly determine whether or not the A/C system has the proper charge of Refrigerant-12 (providing ambient air temperature is above 21°C (70°F). This check can be made in a matter of minutes, simplifying system diagnosis by pinpointing the problem to the amount of the R-12 charge in the system or by eliminating a low charge possibility from the overall checkout.

1. *Engine must be warm and at normal idle speed.*
2. Hood and body doors open.
3. Selector (mode) lever set at "NORM."
4. Temperature lever at "COLD."
5. Blower on "HI."
6. "Hand-Feel" the temperature of the evaporator inlet pipe after the orifice, and accumulator surface, with the compressor engaged.
   - BOTH THE SAME TEMPERATURE AND SOME DEGREE COOLER THAN AMBIENT: A sufficient charge exists. Check for other problems. Refer to "Inspection of the Refrigerant System" in this section.
   - *IF TEMPERATURES VARY: Charge is insufficient.* Leak test and check for other problems.
     - Leak test. If leak found, discharge and repair as required. Evacuate and charge.
     - If no leak found, refer to "CCOT System Diagnostic Charts" in this section.

DELAYED A/C COOLING AFTER ENGINE START UP (V-5 ONLY)

Due to its variable displacement feature, special caution is necessary when diagnosing insufficient cooling conditions with the V-5 compressor. It is normal for liquid refrigerant to collect in the compressor crankcase during extended periods of shutdown, therefore, cooling action may be delayed up to 2 minutes until the refrigerant is pumped from the crankcase.

If you experience a delay in cooling upon start-up beyond 2 minutes, and the normal A/C compressor clutch diagnosis has been completed, follow the procedure outlined below:

1. Operate the A/C system by setting to *"NORM"* A/C mode and high blower.

2. Be sure the compressor clutch has engaged.
3. Idle the engine for 2 minutes with the A/C system operating.
4. If no cooling, run the engine at approximately 3000 RPM for 1 minute with the A/C system operating.
5. If no cooling, change the mode control to "VENT" position for 1 minute at idle.
6. Set A/C system back to "NORM" A/C mode, then run the engine at approximately 3000 RPM for 1 minute with the A/C system operating.
7. If no cooling, drive the vehicle in a normal manner for 5 minutes with the A/C operating.
8. If there is still no cooling, perform the VDOT System Diagnostic Procedure outlined in this section.

CCOT A/C SYSTEM DIAGNOSTIC CHARTS

Refer to figures 4 through 8 for diagnosis of CCOT A/C system problems.

VDOT A/C SYSTEM DIAGNOSTIC CHARTS

Refer to figures 9 through 16 for diagnosis of VDOT A/C system problems.

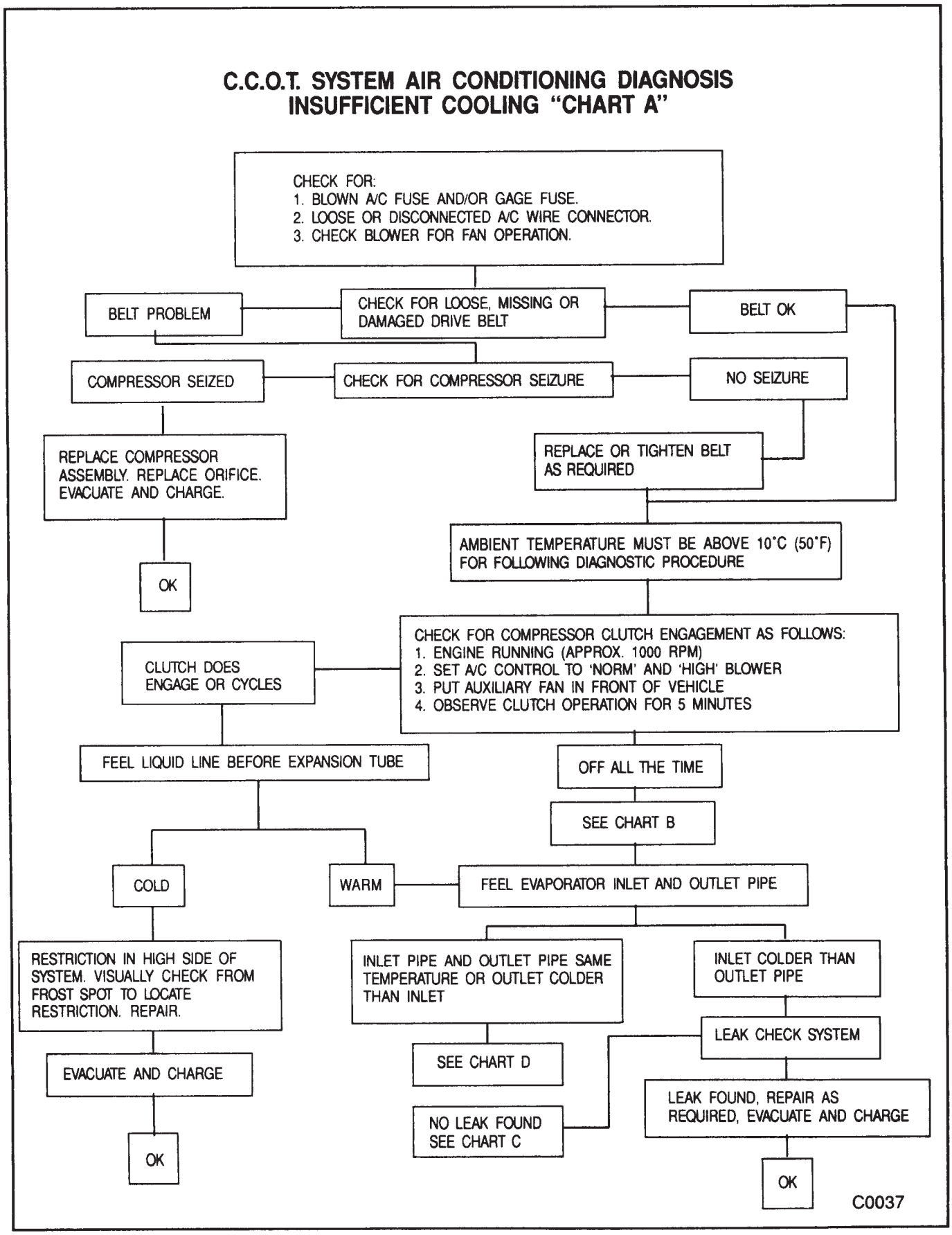

Figure 4—CCOT A/C System Diagnostic Procedure (1 of 5)

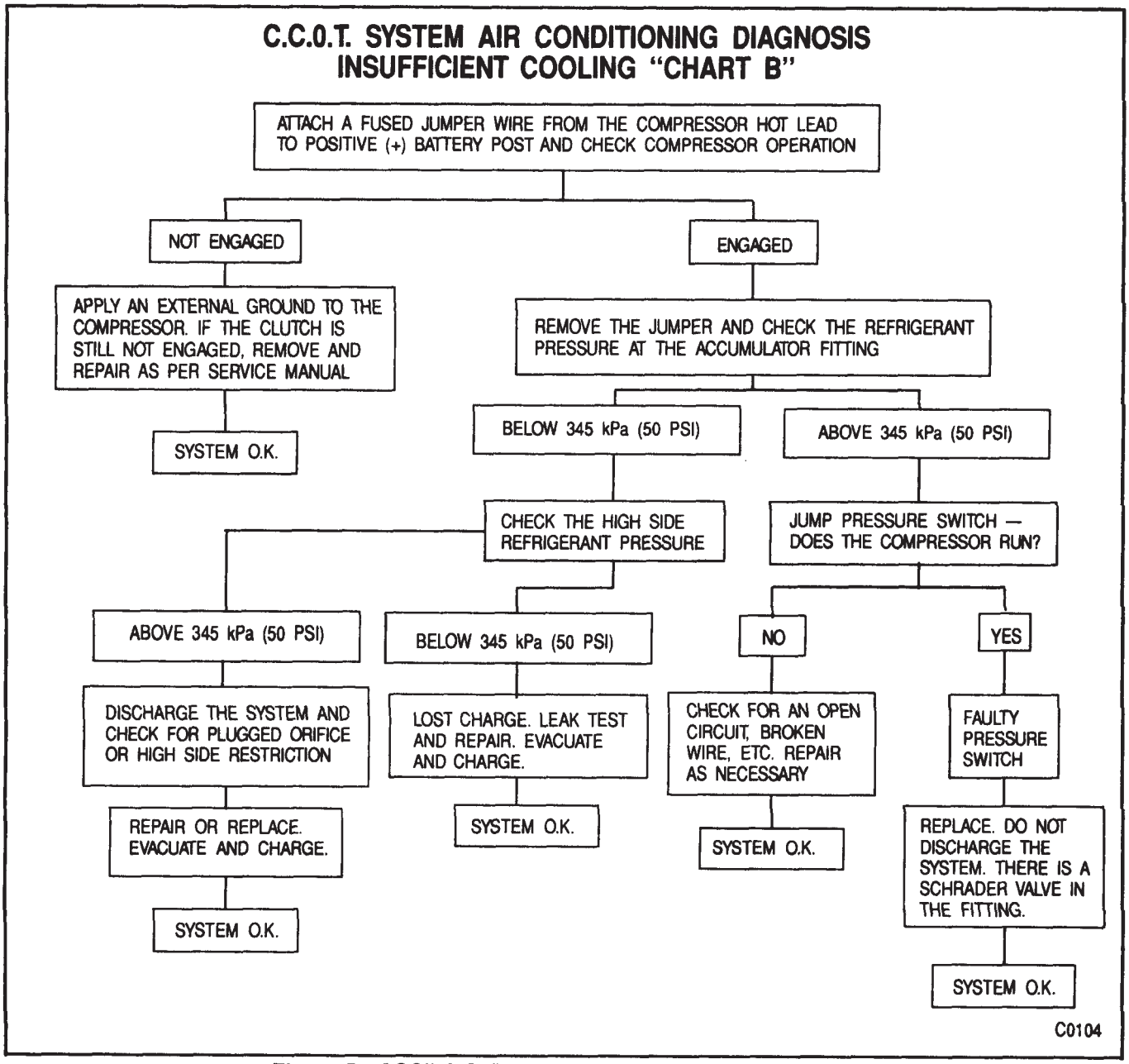

Figure 5—CCOT A/C System Diagnostic Procedure (2 of 5)

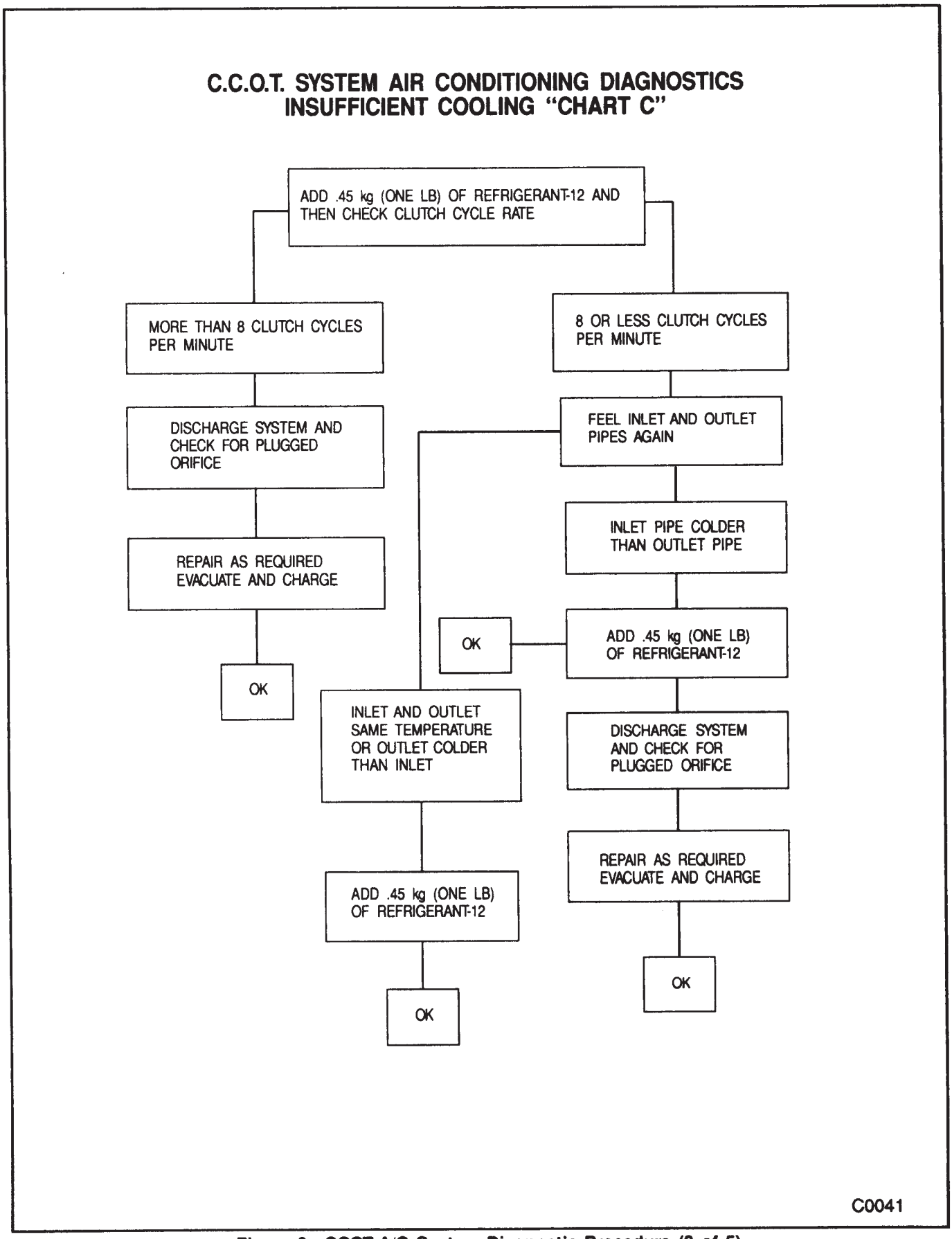

Figure 6—CCOT A/C System Diagnostic Procedure (3 of 5)

C.C.O.T. SYSTEM AIR CONDITIONING DIAGNOSIS INSUFFICIENT COOLING "CHART D"

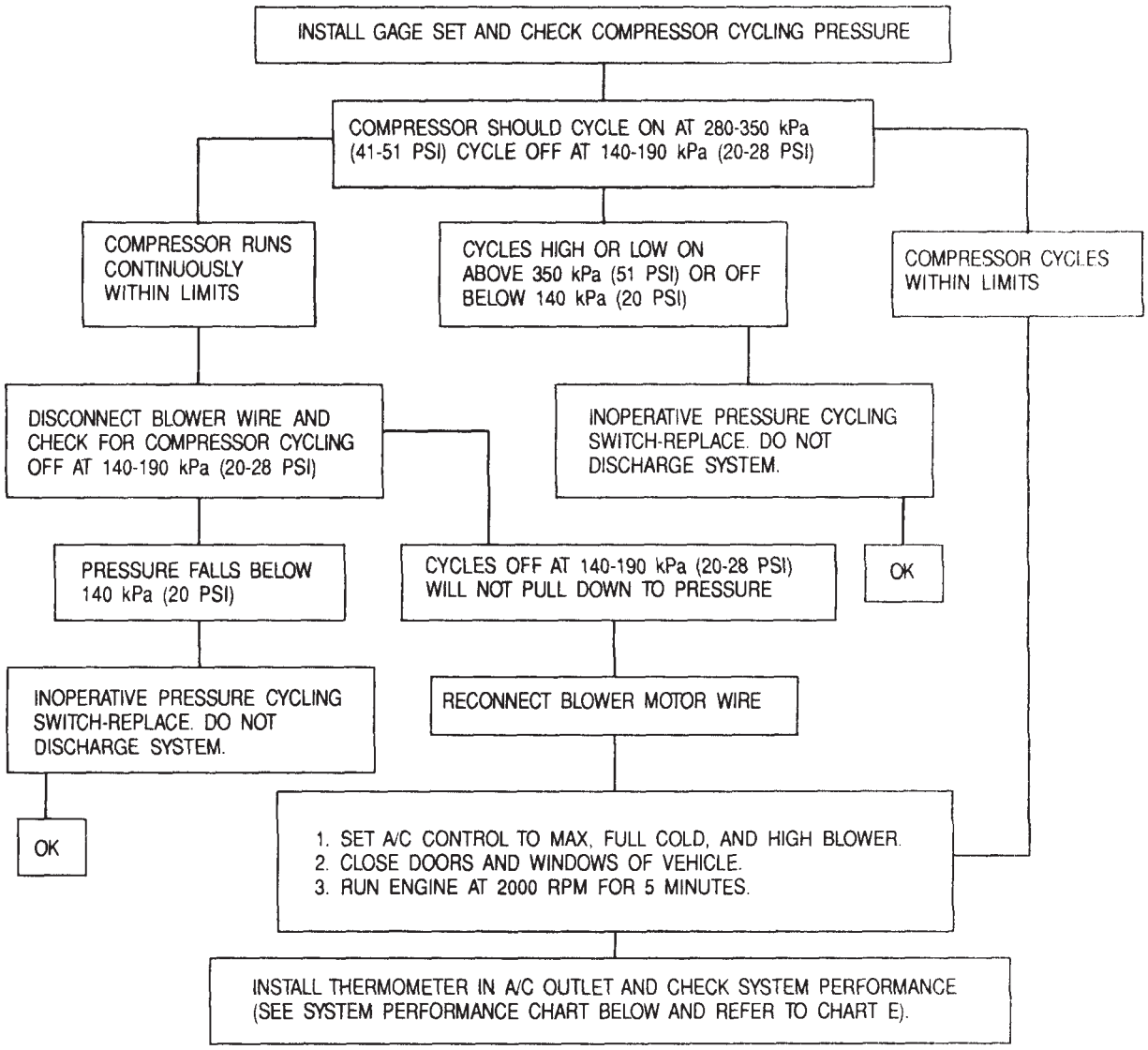

PERFORMANCE CHART FOR C.C.O.T. SYSTEMS

TEMPERATURE OF AIR ENTERING CONDENSER	°F (°C)	70 (21)	80 (27)	90 (32)	100 (38)
COMPRESSOR OUT PRESSURE	PSI (KPA)	135-170 (950-1200)	165-200 (1150-1400)	200-245 (1400-1700)	245-300 (1700-2050)
ACCUMULATOR PRESSURE	PSI (KPA)	22-28 (150-193)	22-29 (150-200)	26-35 (180-240)	30-40 (205-275)
AVERAGE A/C AIR DISCHARGE	°F (°C)	36-43 (2.2-6.0)	36-43 (2.2-6.0)	36-43 (2.2-6.0)	42-48 (5.5-9.0)

C0035

Figure 7—CCOT A/C System Diagnostic Procedure (4 of 5)

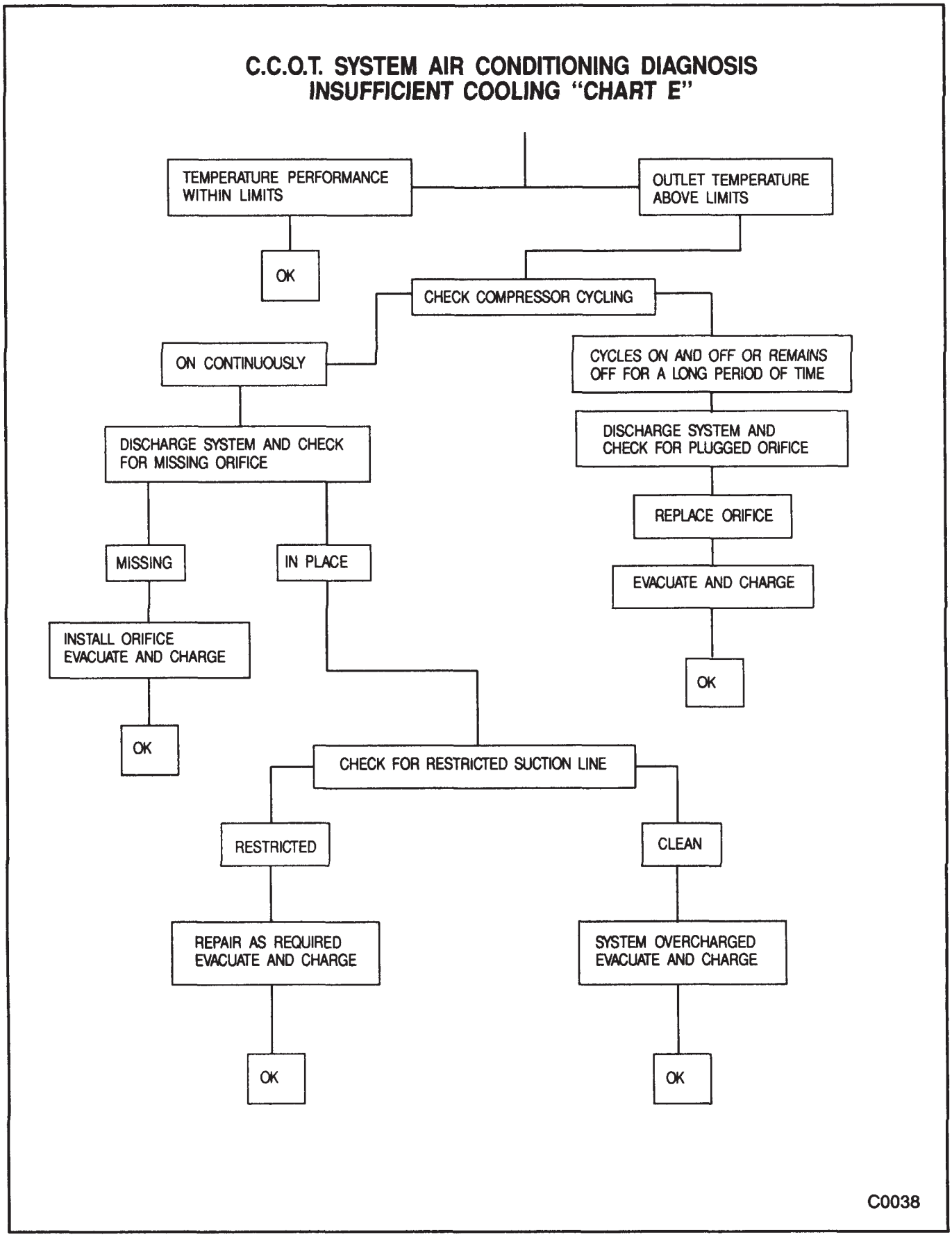

Figure 8—CCOT A/C System Diagnostic Procedure (5 of 5)

V-5 SYSTEM AIR CONDITIONING DIAGNOSIS INSUFFICIENT COOLING

STEP 1—PRELIMINARY CHECKS

Repair the following as necessary. If outlet air temperature with A/C on is normal after making the following repairs, the system is operating normally.

- A/C fuse
- Clutch coil or rear head switch connections
- Temperature valve. Move temperature valve lever rapidly from cold to hot. Listen for temperature valve hitting at each end. Adjust as necessary.
- A/C blower operation.
- Compressor belt. Check condition and tension of belt. Replace as necessary.
- Engine cooling fan operation. Refer to service manual for diagnosis.
- Condensor. Check for restricted airflow through condensor.
- Compressor clutch operation and condition (overheated or discolored)
- Clutch driver (freewheeling)

F8247

Figure 9—VDOT A/C System Diagnostic Procedure (1 of 8)

V-5 SYSTEM AIR CONDITIONING DIAGNOSIS INSUFFICIENT COOLING

STEP 2—CHECKING REFRIGERANT CHARGE

NOTE: Ambient temperature should be above 60°F and engine at normal operating temperature.

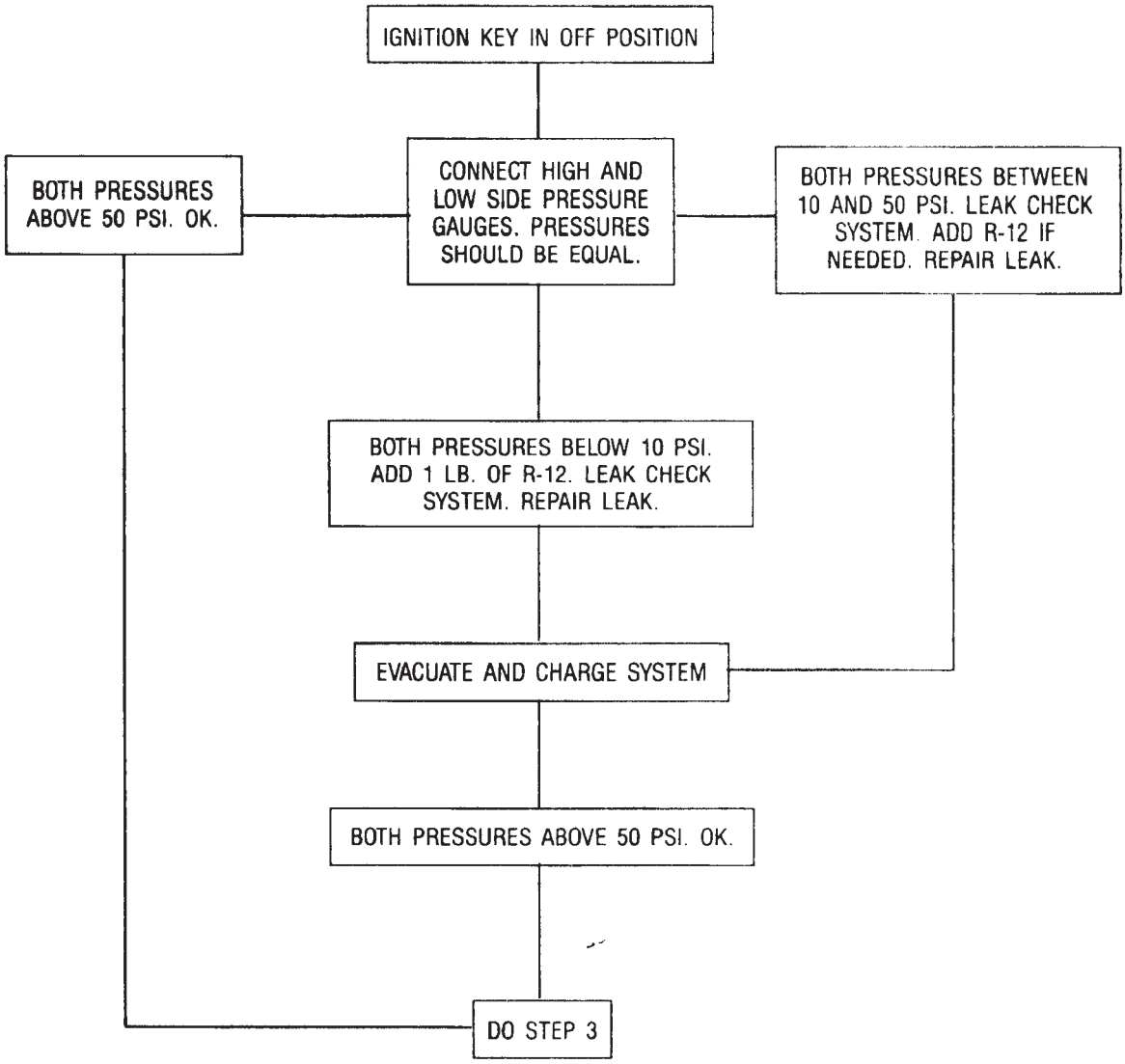

F8248

Figure 10—VDOT A/C System Diagnostic Procedure (2 of 8)

V-5 SYSTEM AIR CONDITIONING DIAGNOSIS INSUFFICIENT COOLING

STEP 3 – Checking Compressor Clutch Engagement

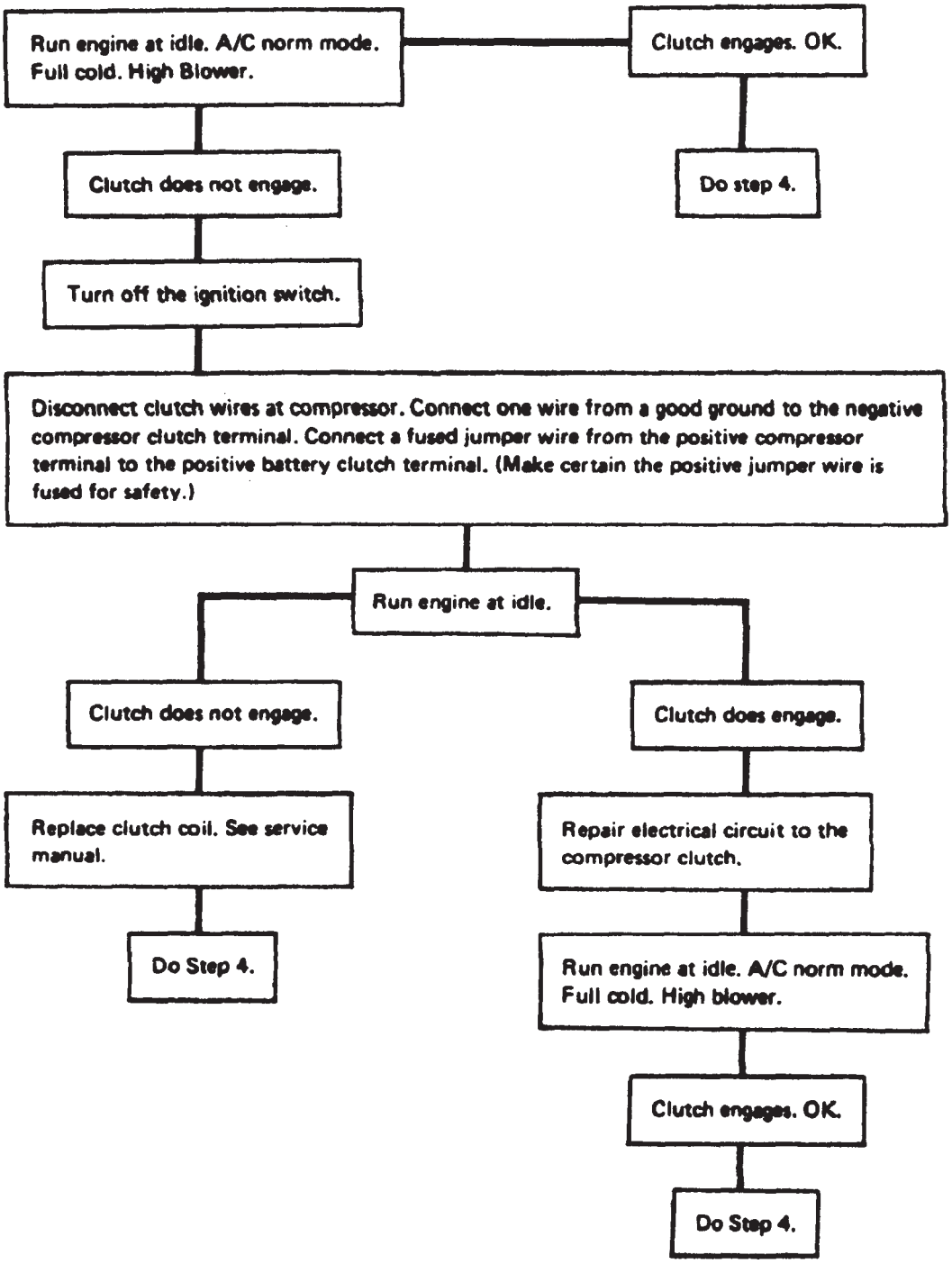

Figure 11—VDOT A/C System Diagnostic Procedure (3 of 8)

V-5 SYSTEM AIR CONDITIONING DIAGNOSIS INSUFFICIENT COOLING

STEP 4 – Checking System Performance

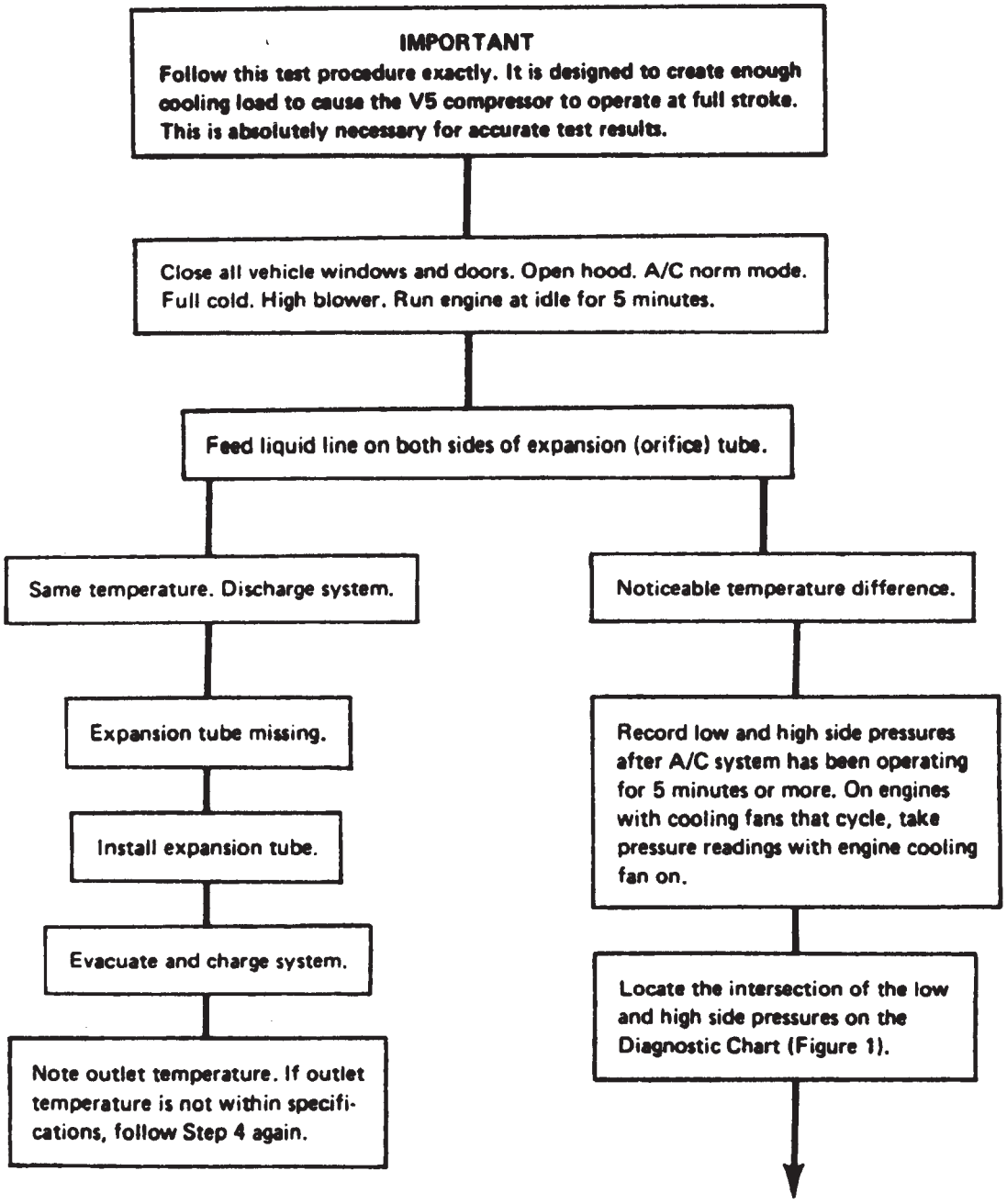

Figure 12—VDOT A/C System Diagnostic Procedure (4 of 8)

V-5 SYSTEM AIR CONDITIONING DIAGNOSIS INSUFFICIENT COOLING

STEP 4 – Checking System Performance (Continued)

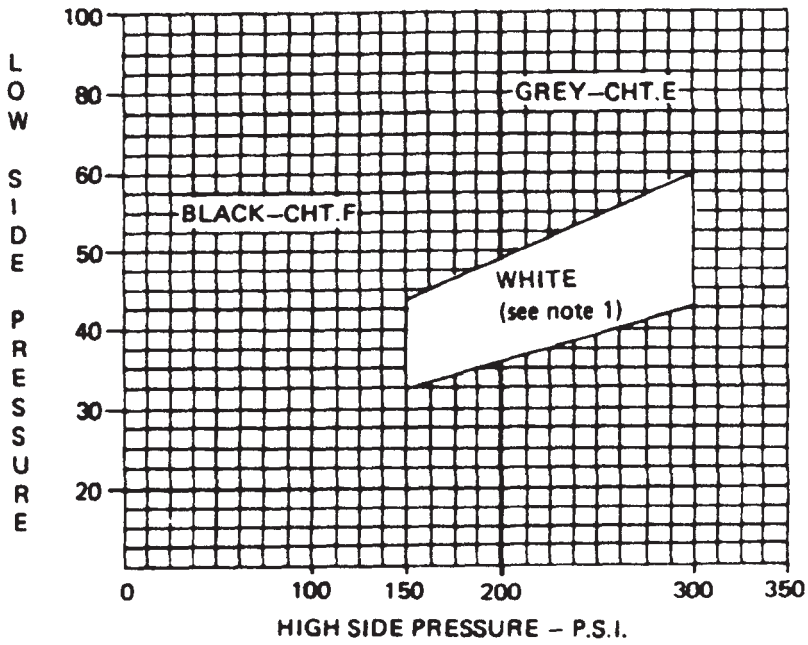

(Figure 1)

Humidity and temperature variables can create borderline diagnostic conditions. If the Diagnostic Chart (Figure 1) directs you to follow procedures in one step, but those procedures do not lead you to correct the problem, follow the procedures for the other step.

Low and high side pressures intersect in the black area of the chart. Do Step 5.

Low and high side pressures intersect in the gray area of the chart. Do Step. 6.

Low and high side pressures intersect in the white area of the chart. No trouble found. All components of the A/C system are functioning properly.

F8251

Figure 13—VDOT A/C System Diagnostic Procedure (5 of 8)

V-5 SYSTEM AIR CONDITIONING DIAGNOSIS INSUFFICIENT COOLING

STEP 5 – Black Zone Performance Checks

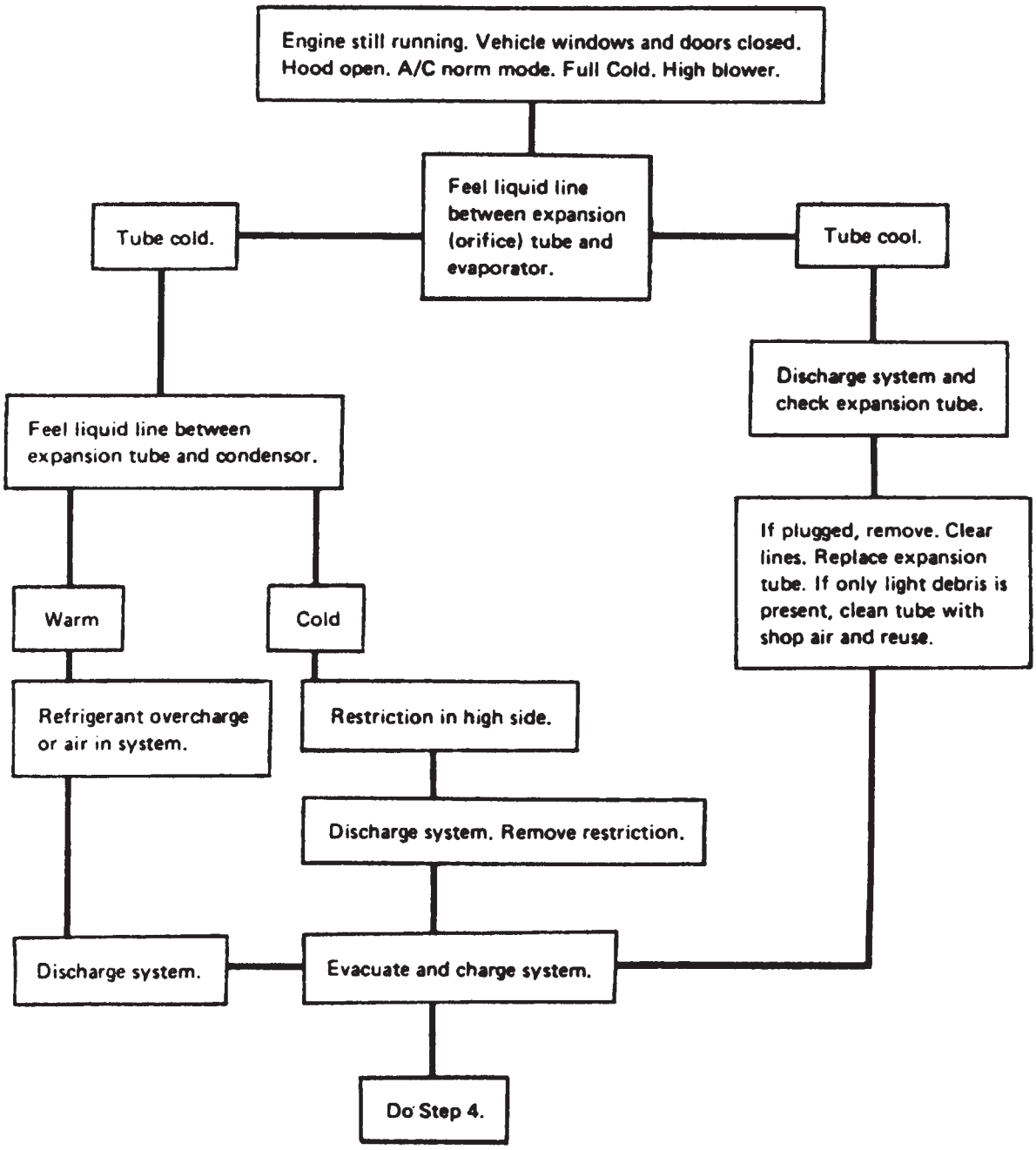

F8252

Figure 14—VDOT A/C System Diagnostic Procedure (6 of 8)

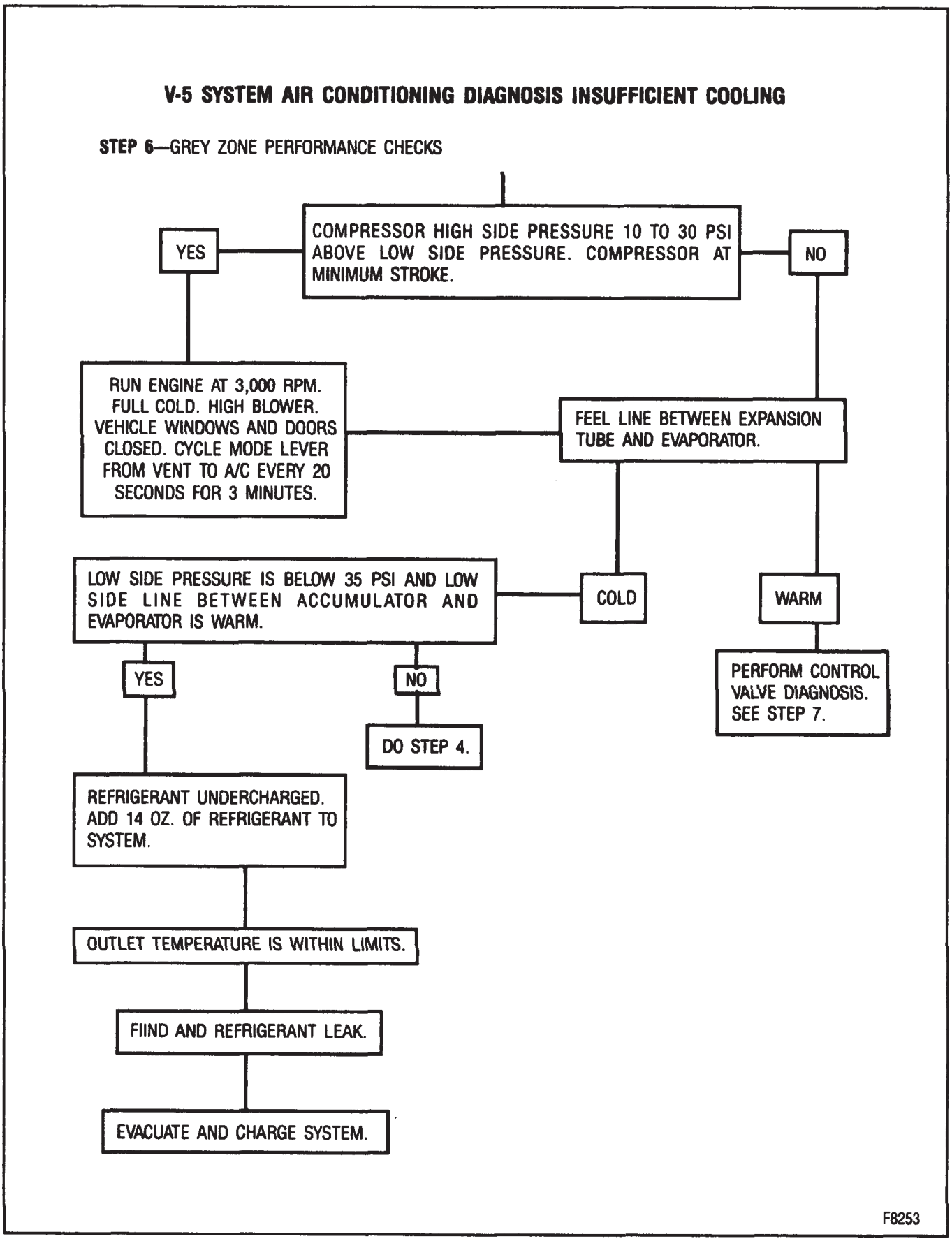

Figure 15—VDOT A/C System Diagnostic Procedure (7 of 8)

V-5 SYSTEM AIR CONDITIONING DIAGNOSIS INSUFFICIENT COOLING

STEP 7 – Control Valve Diagnosis

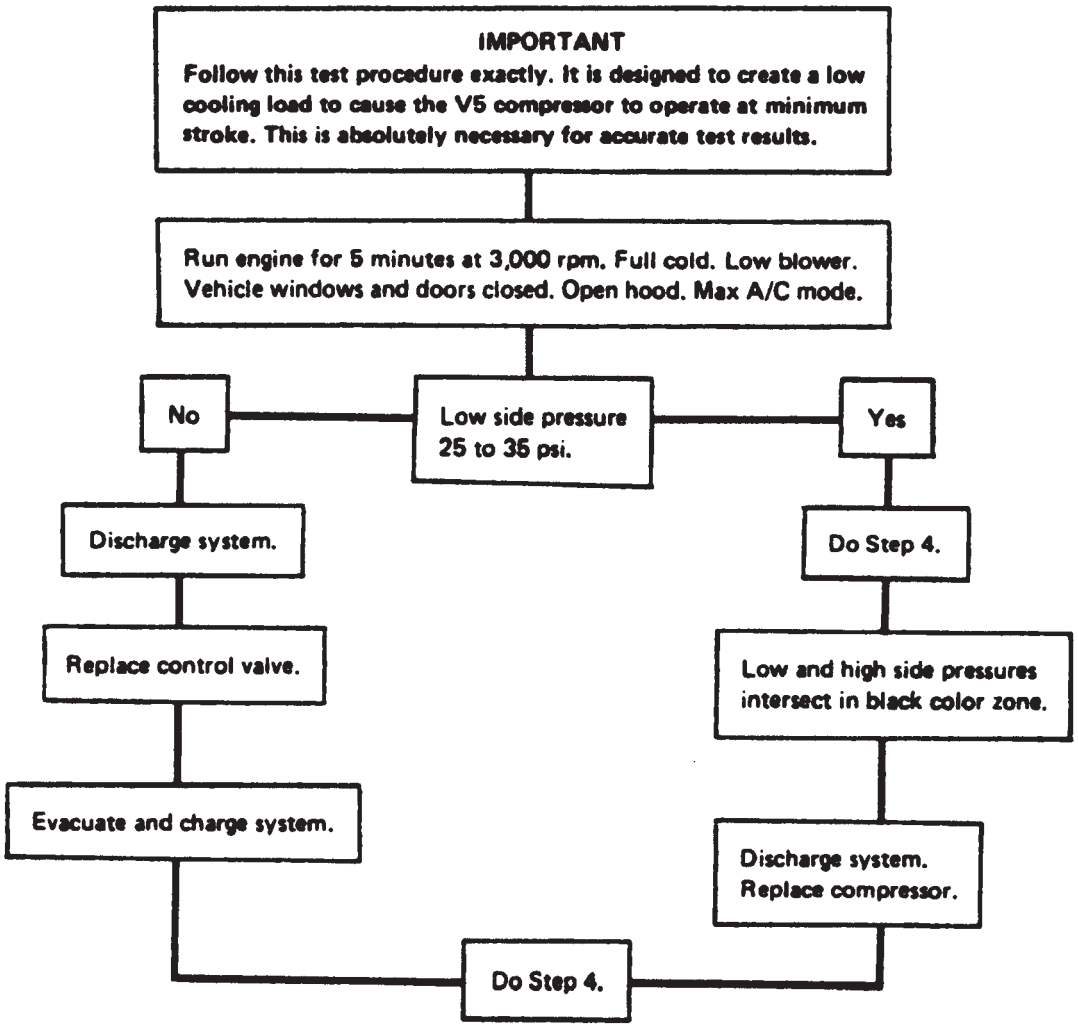

F8254

Figure 16—VDOT A/C System Diagnostic Procedure (8 of 8)

ELECTRICAL/VACUUM SYSTEM DIAGNOSIS

OPERATIONAL TEST

To aid in determining whether or not the air conditioning, electrical, air, and refrigeration systems are operating properly, refer to "Inspection of the Refrigerant System" in this section. For additional electrical diagrams and diagnostic information, refer to the 1992 "S/T Electrical Diagram and Diagnosis Manual."

1. Operation of the air conditioning blower at all speeds with the (mode) lever in any position except "OFF" and engagement of the compressor clutch would indicate that the electrical circuits are functioning properly.
2. The same HAND-FELT temperature of the evaporator inlet pipe and the accumulator surface of an operating system would indicate a properly charged system.
3. Operation of the A/C control selector to distribute air from the designed outlets would indicate proper functioning.

ELECTRICAL SYSTEM

Blower Noise Diagnosis

Refer to diagnostic charts in HEATING AND VENTILATION (SECTION 1A).

Insufficient Heating or Defrosting

Refer to diagnostic charts in HEATING AND VENTILATION (SECTION 1A).

Blower Motor Inoperative Diagnosis

Refer to diagnostic charts in HEATING AND VENTILATION (SECTION 1A).

Heater and A/C Control Diagnosis

When diagnosing a malfunction with the heater and A/C control, refer to figure 17.

VACUUM SYSTEM

Ports on rotary vacuum valves are illustrated to provide simplicity in following vacuum schematic lines but are numbered in consecutive order on the actual valve (figures 18 and 19).

Start the engine and allow it to idle. Move the selector lever to each position and refer to the vacuum diagrams and operational charts for airflow, air door functioning and vacuum circuits. If air flow is not out of the proper outlet at each selector lever position do the following:

Inspect

1. The hose connections at the vacuum actuators, control head valve and vacuum tank.
2. The vacuum source circuit:
   - Install a vacuum tee and gage (with restrictor) at the vacuum tank outlet. Idle the engine and read the vacuum (a normal vacuum is equivalent to manifold vacuum) at all selector lever positions.
   - Vacuum less than normal at all positions. Remove the tee and connect the vacuum gage line to the tank—read the vacuum. If still low, then the problem lies in the feed circuit, the feed circuit to the tank or in the tank itself. If vacuum is now normal, then the problem lies downstream.
   - Vacuum less than normal at some positions. If vacuum was low at one or several of the selector lever positions, a leak is indicated in these circuits.
   - Vacuum normal at all positions. If vacuum was normal and even at all positions, then the malfunction may be caused by improperly connected or plugged lines or a malfunctioning vacuum valve or valves.
3. Specific vacuum circuit check:
   - Place the selector lever in the malfunctioning position and check for vacuum at the pertinent vacuum actuators.
   - If vacuum exists at the actuator but the door does not move, then the actuator is defective or the door is mechanically bound.
   - If low or no vacuum exists at the actuator determine whether the cause is the vacuum harness or the vacuum valve.
   - Check the vacuum harness first.
4. Vacuum harness circuit check:
   - Disconnect the vacuum harness at the control head.
   - The green line should show engine vacuum; if not, trace back through connector to vacuum tank.
   - To check any individual circuit, place the selector lever at the involved circuit position and check for vacuum presence.

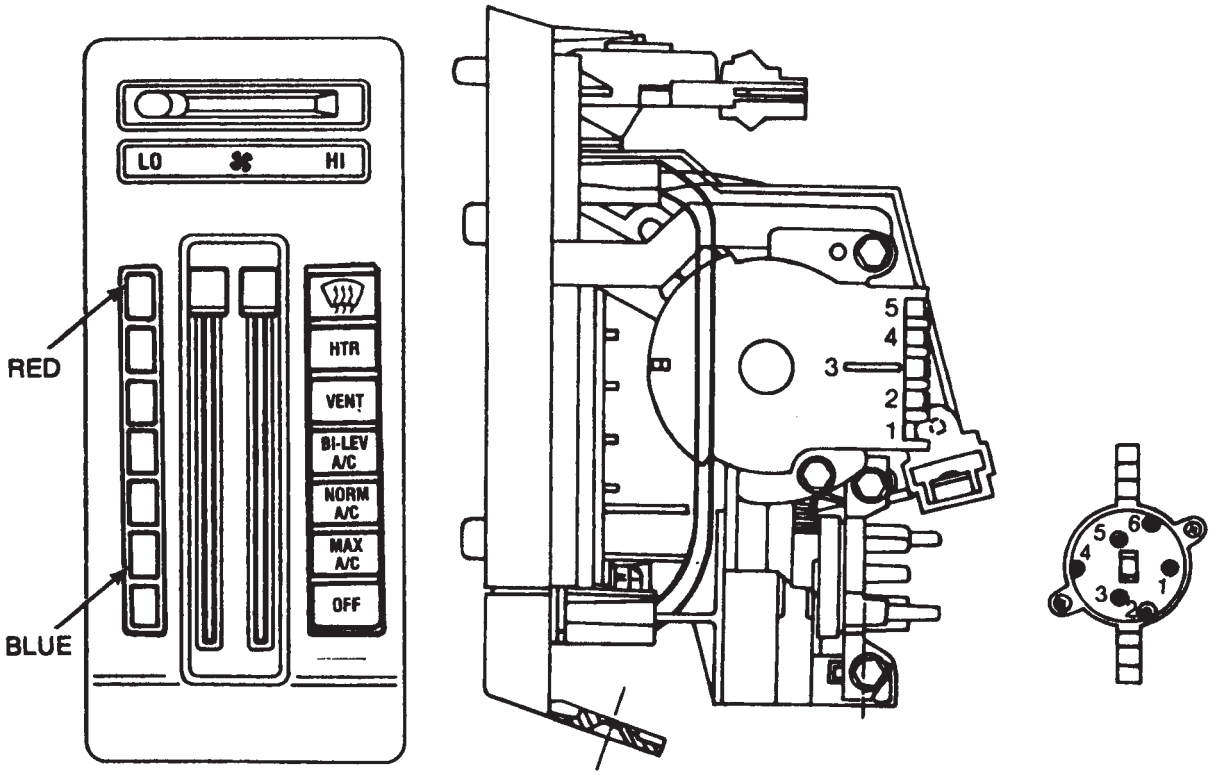

SELECTOR SWITCH OPERATING CHART

CONNECTION	TERMINAL NUMBER	OFF	MAX A/C	NORM A/C	BI-LEV A/C	VENT	HEATER	DEFROST
FAN SWITCH	2	NONE	3, 5	3, 5	3, 5	5	5	3, 5
COMPRESSOR	3	NONE	2, 5	2, 5	2, 5	NONE	NONE	2, 5
NOT USED	4	SAME AS TERMINAL						
BATTERY +	5	NONE	2, 3	2, 3	2, 3	2	2	2, 3

SELECT VALUE OPERATING CHART

CONNECTION	PORT	OFF	MAX A/C	NORM A/C	BI-LEV A/C	VENT	HEATER	DEFROST
INPUT	1	VACUUM	VACUUM	VACUUM	VACUUM	VACUUM	VACUUM	VACUUM
HEATER	2	VACUUM	VENT	VENT	VENT	VENT	VACUUM	VENT
NOT USED	3	SEALED IN THE CONNECTOR						
OUTSIDE AIR/ RECIRCULATION	4	VENT	VACUUM	VENT	VENT	VENT	VENT	VENT
DEFROST	5	VENT	VACUUM	VACUUM	VACUUM	VACUUM	VENT	VENT
A/C MODE	6	VENT	VACUUM	VACUUM	VENT	VACUUM	VENT	VACUUM

FAN SWITCH

TERMINAL	POSITIONS			
	LO	MEDIUM 1	MEDIUM 2	HI
BATTERY +	NONE	MEDIUM 1	MEDIUM 2	HI
HI	NONE	NONE	NONE	BATTERY +
MEDIUM 1	NONE	BATTERY +	OPTIONAL	NONE
MEDIUM 2	NONE	NONE	BATTERY +	OPTIONAL

F8801

Figure 17—Control Assembly Operating Chart

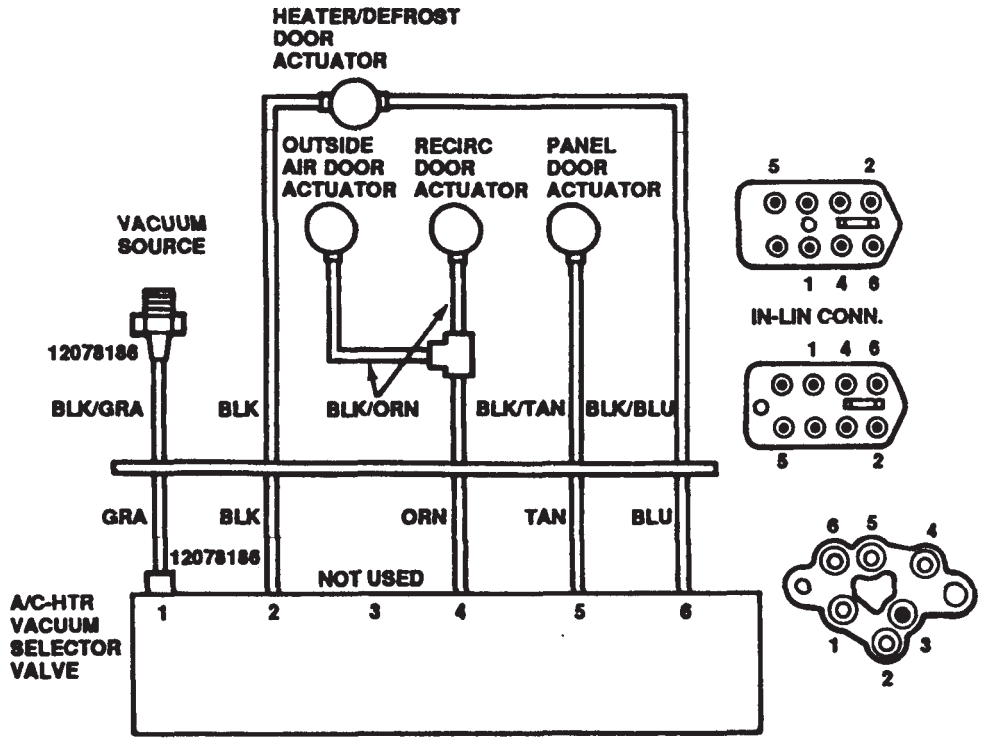

A/C-HTR VACUUM SELECTOR VALVE OPERATING CHART

CONNECTION	PORT	OFF	MAX A/C	NORM A/C	BI-LEV A/C	VENT	HEATER	DEFROST
SOURCE	1	VACUUM	VACUUM	VACUUM	VACUUM	VACUUM	VACUUM	VACUUM
HEATER	2	PARTIAL VAC.	VENT	VENT	VENT	VENT	PARTIAL VAC.	VENT
NOT USED	3	SEALED IN THE CONNECTOR						
OUTSIDE AIR/ RECIRCULATION	4	VENT	VACUUM	VENT	VENT	VENT	VENT	VENT
PANEL	5	VENT	VACUUM	VACUUM	VACUUM	VACUUM	VENT	VENT
DEFROST	6	VENT	VACUUM	VACUUM	VENT	VACUUM	VENT	VACUUM

V1995

Figure 18—Vacuum Schematic

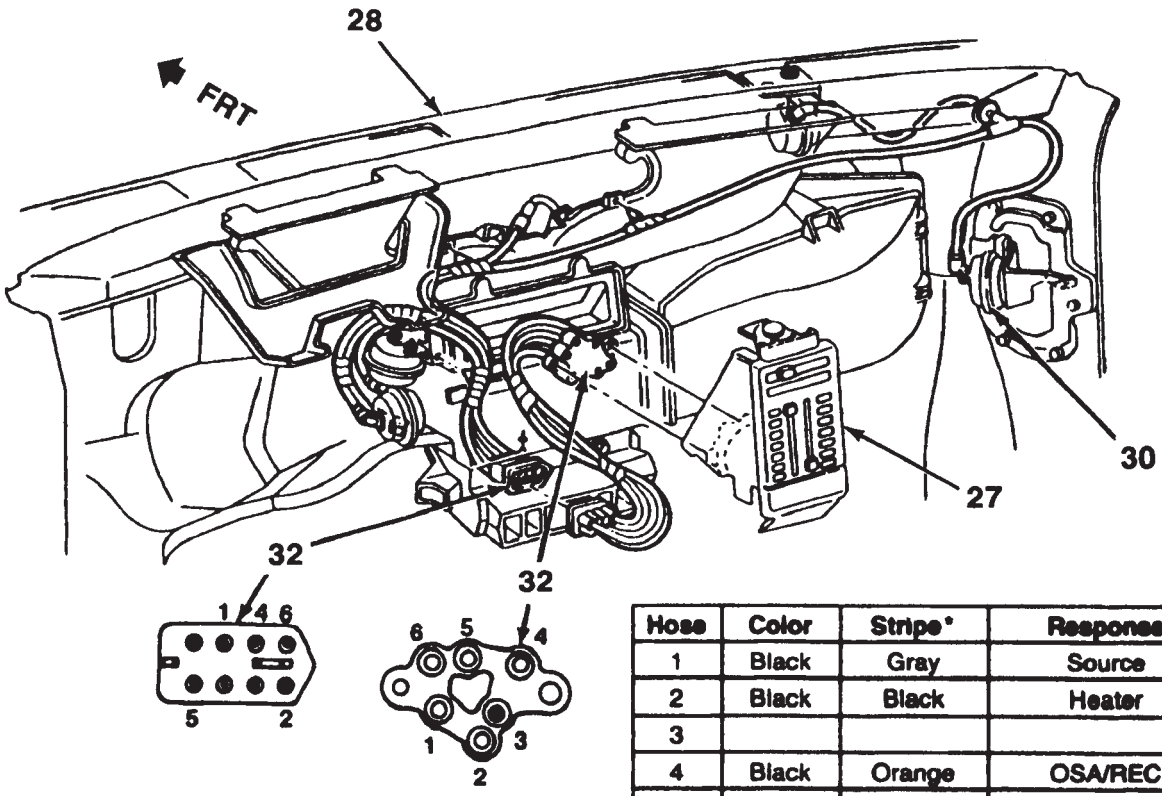

27. Control Assembly
28. Instrument Panel
30. Air Inlet Assembly
32. Vacuum Harness Assembly

Hose	Color	Stripe*	Response
1	Black	Gray	Source
2	Black	Black	Heater
3			
4	Black	Orange	OSA/REC
5	Black	Tan	Defroster
6	Black	Dark Blue	Air Conditioning

*Optional: Hoses may be a solid color instead of black with colored stripes.

V1996

Figure 19—Vacuum Control Harness—Dash

SERVICE PROCEDURES

SERVICE PRECAUTIONS

Before attempting any service which requires opening of refrigerant lines or components, the person doing the work should be thoroughly familiar with the information under "Handling Refrigerant-12," "Handling Refrigerant Lines and Fittings,"and "Maintaining Chemical Stability" in this section. Very carefully follow the instructions in the "Refrigerant Recovery and Recycling, Adding Oil, Evacuating and Charging Procedures" for the unit being serviced.

O-RING REPLACEMENT

Install new GM approved service replacement air conditioning O-rings whenever a joint or fitting is disassembled, except when provided on new components. Even though an O-ring may look the same, it is extremely important that only recommended service replacement air conditioning O-rings be used or excessive leakage may occur.

Always slip the new O-ring onto the flange tube to ensure proper locating and sealing.

Also, prior to installation, lubricate with refrigerant oil and verify that both O-rings and fittings have not been nicked or deformed. Deformed or nicked parts must be replaced. Failure to use the proper service replacement parts and procedures may result in excessive refrigerant leakage.

HANDLING REFRIGERANT-12

Air conditioning systems contain Refrigerant-12. This is a special mixture which requires special handling procedures to avoid personal injury.

Always wear goggles and wrap a clean cloth around fittings, valves, and connections when performing work that involves opening the refrigerant system. **Always work in a well ventilated area and avoid breathing any refrigerant fumes.** Do not weld or steam clean on or near any vehicle-installed air conditioning lines or components.

If Refrigerant-12 should come in contact with any part of the body, flush the exposed area with water and immediately seek medical help.

All Refrigerant-12 drums are shipped with a heavy metal screw cap. The purpose of the cap is to protect the valve and safety plug from damage. It is good practice to replace the cap after each use of the drum.

If it is necessary to transport or carry any container of Refrigerant-12 in a vehicle, do not carry it in the passenger compartment. See the manufacturer's guidelines for storage, transportation and the maximum temperature to which the container can be exposed.

If the occasion ever arises to fill a small Refrigerant-12 drum from a large one, never fill the drum completely. Space should always be allowed above the liquid for expansion.

HANDLING OF REFRIGERANT LINES AND FITTINGS

All metal tubing lines should be free of dents or kinks to prevent loss of system capacity due to line restriction.

- The flexible hose lines should never be bent to a radius of less than four (4) times the diameter of the hose.
- The flexible hose lines should never be allowed to come within a distance of 63.5 mm (2-1/2 inches) of the exhaust manifold.
- Flexible hose lines should be inspected regularly for leaks or brittleness and replaced with new lines if deterioration or leaking is found.
- When disconnecting any fitting in the refrigerant system, the system must be discharged of all Refrigerant-12. However, proceed very cautiously, regardless of the gage readings. Open very slowly, keeping your face and hands away so that no injury can occur. If pressure is noticed when a fitting is loosened, allow it to bleed off very slowly.
- If any refrigerant line is opened to the atmosphere, it should be immediately capped to prevent the entrance of moisture and dirt, which can cause internal compressor wear or plugged lines, in the condenser and evaporator core and expansion (orifice) tubes or compressor inlet screens.
- The use of the proper wrenches when making connections on O-ring fittings, is important. The use of improper wrenches may damage the connection. The opposing fitting should always be backed up with a wrench to prevent distortion of connecting lines or components. When connecting the flexible hose connections, it is important that the swaged fitting and the flare nut, as well as the coupling to which it is attached, be held at the same time using three different wrenches to prevent turning the fitting and damaging the seat.
- The O-rings and seats must be in perfect condition. The slightest burr or piece or piece of dirt may cause a leak. When replacing the O-ring, first dip it in clean 525 viscosity refrigeration oil.

Tighten tubing connections to the specified torque, refer to figure 20.

MAINTAINING CHEMICAL STABILITY

The life and efficient operation of the air conditioning system depends on the chemical stability of the refrigeration system. When foreign materials, such as dirt, air or moisture, contaminate the refrigeration system, they change the stability of the R-12 and 525 viscosity compressor oil. They will also affect the pressure-temperature relationship and reduce efficiency, and could cause internal corrosion and abnormal wear of moving parts.

The following general practices should be followed to insure chemical stability in the system:

1. Whenever it becomes necessary to disconnect a hose connection, wipe away any dirt or oil at and near the connection to eliminate the possibility of dirt entering the system. Both sides of the connection should be capped, plugged or taped as soon as possible to prevent the entrance of dirt and moisture. (It must be remembered that all air contains moisture. Air that enters any part of the refrigeration system will carry moisture with it and the exposed surfaces will collect the moisture quickly.)
2. Keep tools clean and dry. This includes the Manifold Gage Set and all replacement parts.
3. When adding 525 viscosity refrigerant oil, the container/transfer tube through which the oil will flow should be exceptionally clean and dry due to the fact that refrigerant oil should be as moisture-free as possible.

Metal Tube Outside Diameter	Thread and Fitting Size	Steel Tubing Torque		Aluminum or Copper Tubing Torque		Nominal Torque Wrench Span
		N·m	LB. FT.	N·m	LB. FT.	
1/4	7/16	17	13	8	6	7/16 and 9/16
3/8	5/8	45	33	17	12	5/8 and 3/4
1/2	3/4	45	33	24	18	3/4 and 7/8
5/8	7/8	45	33	33	24	7/8 and 11/16
3/4	11/16	45	33	41	31	11/16 and 1 1/4

F5410

Figure 20—Pipe and Hose Connections Torque

4. When it is necessary to "open" an A/C system, have everything needed ready so that as little time as possible will be required to perform the operation. Do not leave the A/C system open any longer than necessary.
5. Anytime the A/C system has been "opened" it should be properly evacuated before recharging.

REFRIGERANT AND OIL CAPACITY

To determine the capacity for the front and rear interior roof mounted systems, refer to:

1. Refrigerant-12
   - Front A/C System—1.134 kg (2.5 lbs.)
   - Overcharging a system may allow liquid Refrigerant-12 to get into the compressor, causing compressor noise and damage. Undercharging will cause insufficient cooling.
2. 525 Viscosity Refrigerant Oil
   - R-4 Compressor—236 mL (8.0 fl. oz.).
   - V-5 Compressor—265 mL (9.0 fl. oz.).

REFRIGERANT RECOVERY AND RECYCLING, ADDING OIL, EVACUATING AND CHARGING PROCEDURES

REFRIGERANT RECOVERY AND RECYCLING

The Air Conditioning Refrigerant Recovery and Recycling Station (J 38100-C) is designed to be compatible with charging station J 23500-01 or its equivalent. The recovery and recycling operations are performed separately with the capability to recycle 13.6 Kg (30 lb.) in one operation. Two 13.6 Kg (30 lb.) capacity reusable tanks are included with the station.

NOTICE: The Air Conditioning Refrigerant Recovery and Recycling Station meets UL® standards for moisture and contamination removal. Recovery systems which cannot meet these standards are not approved for warranty repairs. Reuse of moisture or particulate contaminated refrigerant will result in premature compressor and other component failure.

CAUTION: Always wear goggles and wrap a clean cloth around fittings and/or connections when doing work that involves opening the refrigeration system. If liquid refrigerant comes into contact with the skin or eyes, injury may result.

- Before removing and replacing any of the air conditioning refrigeration lines or components, the refrigerant must be completely recovered.
- Always use service valve and pressure gage sets during evacuation and charging procedures.
- Do not charge while compressor system is hot.
- Always check the A/C system for pressure with a manifold gage set to determine if refrigerant is present in the system. Performing recovery on an A/C system which is open to the atmosphere as a result of a leak, would allow the recovery station to pull only air into the tank.

CAUTION: Never remove a gage line from its adapter when the line is connected to the A/C system. Always remove the line adapter from the service fitting to disconnect a line. Do not remove the charging hose at the gage set while attached to the service low-side fitting. This will result in complete discharge of the system due to the depressed Schrader-type valve in the service low-side fitting and may cause personal injury due to escaping refrigerant.

STATION (ACR) SETUP AND MAINTENANCE

Filter Drier Installation

Important

- USE ONLY AUTHORIZED FILTER DRIER CORES. Use of any other cores will give unsatisfactory results and will void the warranty.

1. Remove the screws holding the filter cap to the shell. Inside you will find a filter drier core bracket (attached to the cap), and a piece of cardboard separating the bracket and the filter cap (figure 21).
2. Clean all internal parts with a lint free towel.
3. Discard the cardboard separator.
4. Remove the filter drier core from the sealed can. Do not remove the filter from the can until you are ready to install it in the system.
5. If the filter cap gasket is damaged, replace it. Replacement gaskets are included with each filter drier core.
6. Center the spring on the filter cap and place the upper bracket on the spring with the center boss of the bracket fitting into the coil and the edges of the plate facing up.

7. Position the filter drier core on the upper bracket. Position the screened lower bracket on the filter drier core and install the rods. Tighten the tie rods until they stop.
8. Install the filter drier core assembly into the filter drier shell. Replace the bolts and tighten in a star pattern to a torque of 20 N·m (15 ft. lb.).
9. When the core has been installed and the filter drier reassembled, attach the blue hose to the vacuum pump and run the pump for approximately 10 minutes to remove all air.
10. Turn off the vacuum pump and disconnect the hose.

Recovery Tank Installation

CAUTION: Use authorized refillable refrigerant tanks only. Use of non-refillable tanks could cause personal injury and will void the warranty. Non-refillable tanks will affect weight platform calibration and will result in overfilled tanks. Overfilling could cause the safety valve to "pop-off" releasing a large quantity of refrigerant. If liquid refrigerant comes into contact with the skin or eyes, personal injury may result.

1. The recovery tank is supplied with 68.95-103.4 kPa (10-15 psi) of dry nitrogen to keep it clean and dry during shipment. Bleed this pressure from the tank before attaching the tank to the station by removing the sealing cap and opening either valve. A new tank without the precharge of dry nitrogen indicates a leak and should be immediately returned for replacement (See Manufacturer's Instruction Manual).
2. Place the tank on the scale platform at the rear of the station. Place the bottom lip of the tank around the outside diameter of the stand-off welded to the platform. This will center the tank automatically. Loosely fasten the strap around the tank in order to prevent the tank from tipping over.
3. Attach the red hose from the back of the station to a vacuum pump. Attach the blue hose from the back of the station to the "Liquid" port of the tank. Attach the yellow hose to the air purge elbow on the tank.
4. Open the "Liquid" valve on the tank. Turn on the vacuum pump. Pull a vacuum on the tank and station for approximately 10 minutes to remove all unwanted air from the tank and from the station.
5. After a vacuum has been pulled, turn off the vacuum pump and disconnect the hose from the vacuum pump. Attach the red hose to the "Vapor" port on the tank and open the "Vapor" valve.
6. Perform this procedure only when putting new tanks into service.

Weight Platform Calibration

The weight platform should be checked for accuracy at least once a month. This calibration will assure that the compressor will shut off when the tank is full (figure 22).

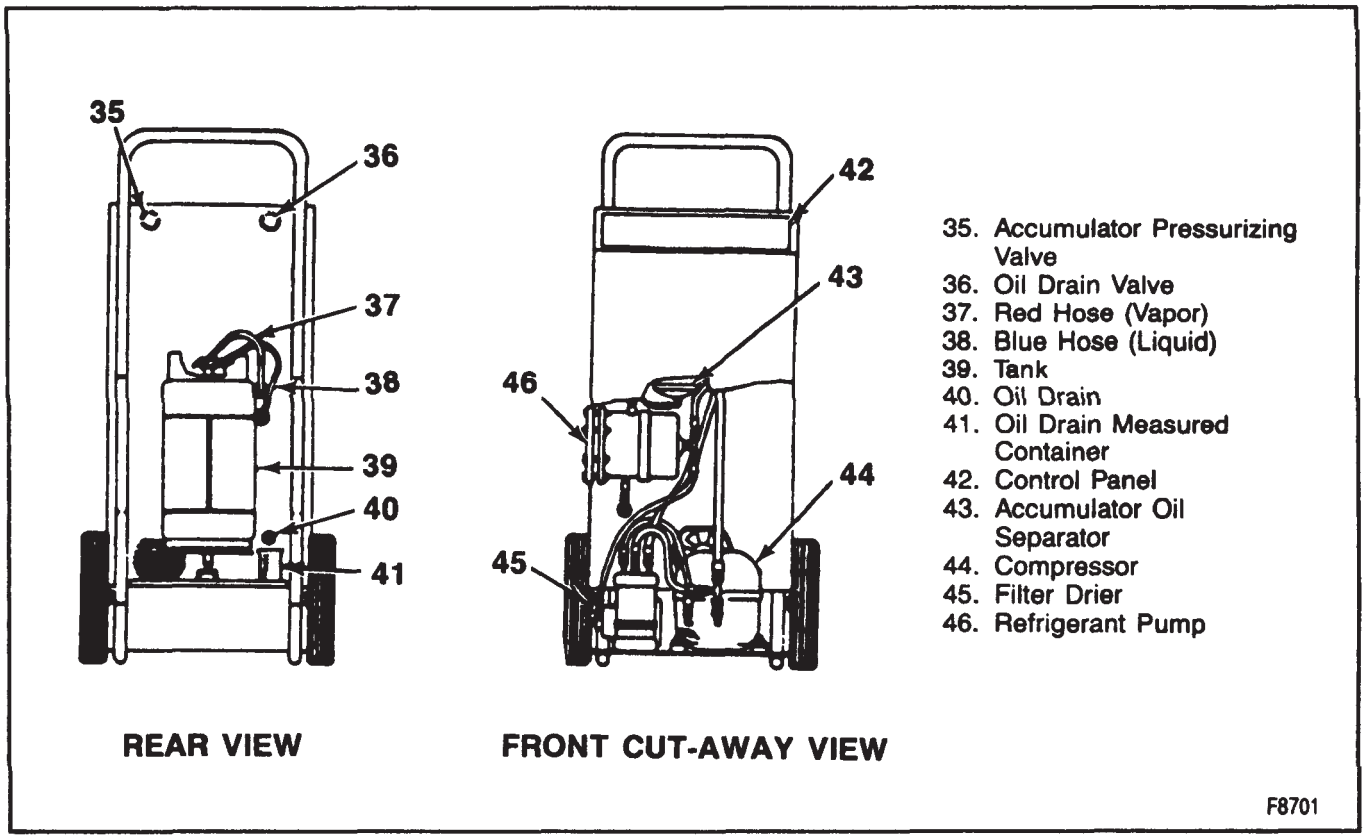

Figure 21—ACR Component Locations

CAUTION: Use of non-refillable tanks will affect platform calibration and will result in over filling of non-refillable tanks. Overfilling could cause the safety valve to "pop-off" releasing a large quantity of refrigerant. If liquid refrigerant comes into contact with the skin or eyes, personal injury may result.

1. Place a known 20.4 Kg (45 lb.) weight centered on the platform. The switch should just trip or be very close to tripping with this amount of weight.
2. If the switch is tripped, the mechanism is in calibration. If the switch does not trip, place a 0.9 Kg (2 lb.) weight on top of the 20.4 Kg (45 lb.) weight. This weight should definitely trip the switch. If the switch is tripped, the mechanism is in calibration. If the switch did not trip, the mechanism must be recalibrated.
3. To recalibrate, remove the 0.9 Kg (2 lb.) weight and loosen the lock nut of the trip screw. Turn the trip screw until the switch just trips. Remove the 20.4 Kg (45 lb.) weight.
4. To check, place the 20.4 Kg (45 lb.) weight on the platform and repeat step No. 2. Repeat step No. 3 as required. Tighten lock nut of the trip screw when calibration is complete.

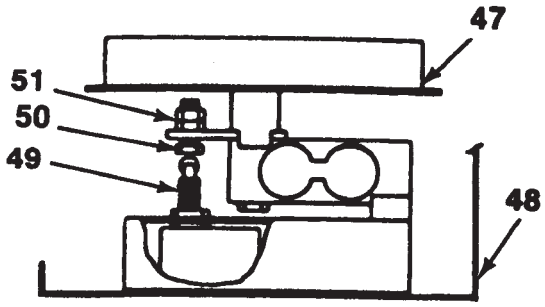

47. Platform Assembly
48. Station Back Panel
49. Trip Switch
50. Adjusting Sctrew
51. Locknut

F8702

Figure 22—Weight Platform Calibration

Control Panel

The control panel contains the switches and monitors as follows: (Refer to figure 23).

- Main Power Switch - supplies electrical power to the control panel
- Compressor Start Switch - energizes compressor
- Compressor On Light - lights when compressor is energized
- High Pressure Light - lights when there is pressure above 1827 kPa (265 psi) in the system
- Recovery Full Tank Light - lights when recovery tank is full
- Recycling System Start Switch - energizes recycling pump
- Recycling Pump On Light - lights when recycling pump is energized

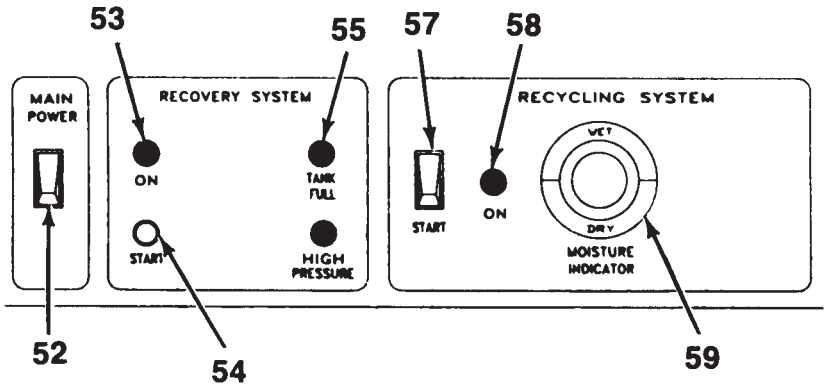

52. Main Power Switch
53. Compressor "On" Light
54. Compressor Start Switch
55. Recovery Full Tank Light
56. High Pressure Light
57. Recycling System Start Switch
58. Recycling Pump On Light
59. Moisture Indicator-
    Yellow = Moisture Green = Dry

V2137

Figure 23—Control Panel

- Moisture Indicator - tells when refrigerant is wet or dry, or when filter core needs to be replaced, if no color change occurs in 2 hours of recycling.

Filter Drier Core Replacement

Guidelines for replacing the filter drier core:

- For proper contamination removal, replace the filter drier core after recycling a maximum of 136 Kg (300 lb.) of refrigerant.
- If the moisture indicator does not change to green after two hours of filtering time, the filter drier core is saturated with moisture and should be changed.

NOTICE: Use only authorized filter drier cores. Use of any other cores will give unsatisfactory results and will void the warranty.

CAUTION: Steps 2 and 3 are critical to avoid possible hazardous release of refrigerant. If liquid refrigerant comes into contact with the skin or eyes, injury may result.

1. Close the "Liquid" valve on the tank.
2. Attach the blue hose to the recovery inlet of the station.
3. Start the compressor and recover all refrigerant remaining in the station into the storage tank. The compressor will automatically shut off when recovery is complete.
4. Remove the bolts holding the filter cap to the shell. The filter drier core and bracket are attached to the filter cap.
5. Remove the tie rods from the filter cap and remove the filter drier core from the brackets.
6. Clean all internal parts.
7. Remove the filter drier core from the sealed can. Do not remove the filter from the can until you are ready to install it in the system.
8. If the filter cap gasket is damaged, replace it. Replacement gaskets are included with each filter drier core.
9. Center the spring on the filter cap and place the upper bracket on the spring with the center boss of the bracket fitting into the coil and the edges of the plate facing up.
10. Position the filter drier core on the upper bracket. Position the screened lower bracket on the filter drier core and install the tie rods. Tighten the tie rods until they stop.
11. Install the filter drier core assembly into the filter drier shell. Replace the bolts and tighten evenly, in a star pattern, to a torque of 20 N·m (15 ft. lb.).
12. When the core has been replaced and the filter drier reassembled, attach the blue hose to the vacuum pump and start the vacuum pump. Run the pump for approximately 10 minutes to remove all air.
13. Turn off the vacuum pump and disconnect the hose.
14. Reattach the blue hose to the "Liquid" port of the tank and open the "Liquid" valve on the tank. You are now ready to continue recycling with your station.

Refrigerant Recovery

The refrigerant system must be discharged using an Air Conditioning Refrigerant and Recycling System J 38100-C. After repairing the malfunction the refrigerant system can then be evacuated and charged using air conditioning service charging station J 23500-01 or equivalent, or the manifold and gage set J 23575-01 and refrigerant.

Evacuation lines from the recovery system and the charging lines from the charging station or manifold and gage sets require the use of adapters to connect to the A/C system low-side service fitting. A straight adapter J 5420 and a 90°adapter J 9459 are available.

NOTICE: Failure to check for residual oil from the previous recovery can result in adding extra oil to the current vehicle being serviced. This will result in reduced performance and possible compressor damage.

1. Start the vehicle and run with the A/C on for 2 minutes and then turn engine off. Attach a manifold gage set to the A/C system and attach the recovery station inlet hose to the center fitting of the manifold gage set (figure 24).
2. Open both valves of the manifold gage set. Make certain the refrigerant tank "Vapor" valve and the "Liquid" valve are open.
3. Plug the station into a suitable AC power outlet and turn on the "Main Power" switch.

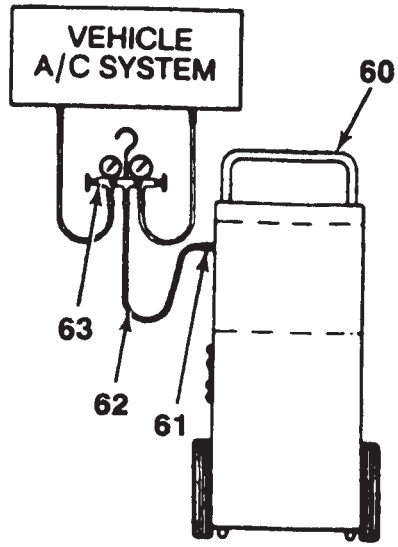

60. Refrigerant Recovery and Recycling Station
61. Station Left
62. Yellow Hose
63. Manifold Gage Set

F9492

Figure 24—ACR Hook Up

4. Depress the "Compressor Start" switch. The amber "Compressor On" light will come on and the compressor will start. The compressor will shut off automatically when recovery is complete. Wait 2 minutes and check for pressure rise. If pressure rise occurs depress "Compressor Start" switch and allow to repeat the recovery.
5. To drain the accumulator of refrigerant system oil, open the "Accumulator Pressurizing" valve for 15 seconds to allow some compressor discharge pressure back into the accumulator. Open the oil drain valve slowly and drain the accumulator. When the oil stops draining, close the oil drain valve. Do not allow the accumulator to completely depressurize.
6. Although refrigerant can be filtered and recycled at any time, it is recommended to recycle when the tank is full for greatest efficiency. Two tanks are provided so you can fill one, recycle it, and use it for charging systems while filling the second tank.

When the recovery tank is full, the "Trip Switch" at the bottom of the weight platform will de-energize the compressor and the "Tank Full' light will come on. Close both valves, remove the tank from the platform, and replace with another refillable tank or recycle the first tank. If the first tank isn't immediately recycled take precautions to prevent its use in A/C systems BEFORE it is recycled. Additional tanks (part number J 38100-30) are available, see the "Replacement Parts" section of your operators manual.

Refrigerant Recycling

1. Plug the station into a suitable AC power outlet and turn on the main power switch.
2. Open both valves on the recovery tank.
   - For efficiency, recycle full tanks of refrigerant.
3. Turn the "Recycle Start" switch to on. The amber "Recycle On" light will come on and the refrigerant pump will start.
4. Refrigerant will be seen going through the "Moisture Indicator" at start up. If there is sufficient supply of refrigerant, the bubbles will clear after a few seconds. When the bubbles clear from the "Moisture Indicator", the refrigerant is operating at maximum efficiency.
5. Allow the station to operate until the dot in the center of the "Moisture Indicator" turns green. The "Moisture Indicator Dot" should change to the shade indicated on the reference decal. Always run the recycling system a minimum of 30 minutes. If the "Moisture Indicator" starts out yellow, it could take as long as two hours to turn green, depending on the moisture content of the refrigerant.
6. Shut off the station when recycling is complete. This not an automatic function.

Guidelines for replacing the filter drier core:

- For proper contaminant removal, replace the filter drier core after recycling a maximum of 136 Kg (300 lb.) of refrigerant.
- If the moisture indicator does not change to green after two hours of filtering time, the filter drier core is saturated with moisture and should be changed.
- Check the A/C system oil from the accumulator with an acid test kit to determine the acid quantity of the oil.

Operating Hints

1. When using the recovery station in conjunction with a charging station, attach the center port hose of the manifold gage set to the inlet port of the ACR station. Then follow the normal operating procedures for the recovery/recycling station.
2. When using the ACR station in conjunction with an automatic charging station, attach the exhaust hose to the inlet of the ACR station. On automatic A/C service stations, a hole has been added to the rear of the cabinet for convenient access to the exhaust hose. On older style stations, you must open the front doors of the cabinet to reach the exhaust hose.
   - After attaching the exhaust hose to the ACR station, depress the "Main Power" switch on the automatic charging station. Then depress the "Exhaust" switch. Then follow the normal operating procedures for the ACR station.
3. Air is automatically vented from the recovery tank during recycling. This feature eliminates the need to "purge" hoses before recovering the refrigerant.
4. Operating the engine with the A/C off during recovery may reduce the recovery time by increasing the temperature in the accumulator area.
5. To help prevent the escape of refrigerant to the atmosphere, the ACR can be attached to a "Dial-A-Charge" cylinder top vent port when filling the cylinder.
6. Always check the ACR station for residual oil from the previous recovery, see Step 5 in Refrigerant Recovery.

DIAGNOSIS OF THE REFRIGERANT RECOVERY AND RECYCLING SYSTEM

PROBLEM	POSSIBLE CAUSE	CORRECTION
Recovery compressor does not start	1. Power cord not plugged in, or no power at plug. 2. Recycle switch is on or main power switch is off. 3. High load on compressor. 4. Tank full light is on. 5. High pressure light is on. 6. Bad components - start switch, relay, compressor, etc.	1. Check circuit for power. 2. Be sure recycle switch is off and main power is on. 3. Open accumulator pressurizing valve for approximately 5 seconds, then close. 4. Change tank. Recalibrate weight platform. 5. Check valves on tank to be sure they are open. Check scale calibration. Call assistance number below. 6. Call asssistance number below.
Runs a short time, but does not complete recovery	1. Tank valves not open. 2. High inlet pressure. 3. Low oil level in compressor. 4. Bad components, compressor, relay, etc.	1. Open both tank valves. 2. Open accumulator pressurizing valve 10 seconds, then close. 3. Call assistance number below. 4. Call assistance number below.
Runs but won't shut off	1. Leak in vehicle system. 2. Accumulator pressurizing valve or oil drain valve not closed.. 3. Bad components, vacuum switch, etc.	1. Pressure must be present in manifold guages before starting recovery operation. 2. Close both valves. 3. Call assistance number below.

RECYCLING OPERATION

PROBLEM	POSSIBLE CAUSE	CORRECTION
Refrigerant pump does not appear to be running	1. Power cord not plugged into good power supply. 2. Main power switch off. 3. Tank valves not open. 4. Faulty components, pump, switch, etc.	1. Check circuit for power. 2. Turn on. 3. Open valves. 4. Call assistance number below.
Bubbles will not clear in moisture indicator	1. Tank valves not open. 2. Not enough refrigerant in tank - must have 8 lbs. minimum.	1. Open valves. 2. Recover more refrigerant before recycling.
Moisture indicator will not turn green after 2 hours running	1. Wet or plugged filter cartridge. 2. Not enough refrigerant in tank - must have 8 lbs. minimum. 3. Faulty moisture indicator.	1. Remove and replace filter cartridge (J-38100-10). Be sure to pull vacuum (refer to instructions). 2. Recover more refrigerant before recycling. 3. Remove and replace moisture indicator.

FOR ASSISTANCE IN SERVICING OR USING YOUR ACR² SYSTEM, CALL THE KENT MOORE TOLL FREE SERVICE LINE 1-800-345-2233

D0220

ADDING OIL

Oil should be added to the A/C system after it is discharged and before it is evacuated. Remove the refrigeration suction hose at the accumulator outlet pipe connection. Pour the right amount of new refrigerant oil into the hose or pipe, then reconnect the hose to the pipe. (See "Refrigerant Oil Distribution" for information on the amount of oil needed.)

REFRIGERANT OIL DISTRIBUTION

The R-4 compressor system requires 236 mL (8 fl.oz) of 525 viscosity refrigerant oil.

The V-5 compressor system requires 265 mL (9 fl. oz.) of 525 viscosity refrigerant oil.

New 525 viscosity refrigerant oil must be added to the system when components are replaced, as follows:

a. All Compressors (drain and measure the oil)
   - If less than 30 mL (1 fl. oz.) is drained—add 60 mL (2 fl. oz.) to the new compressor.
   - If more than 30 mL (1 fl. oz.) is drained—add same amount that was drained to the new compressor.

b. Accumulator—Add 105 mL (3.5 fl. oz.) of new oil to the replacement accumulator to compensate for oil retained by original accumulator desiccant and bag assemblies. The accumulator should only be replaced if leaking due to a perforation, damaged O-ring seat, or damaged threads.

c. Evaporator—Add 90 mL (3 fl. oz.) of new refrigerant oil.

d. Condenser—Add 30 mL (1 fl. oz.) of new refrigerant oil.

The accumulator should only be replaced when a physical perforation to the accumulator is found resulting in a leak.

EVACUATING AND CHARGING

CAUTION: Never charge the A/C system through the high pressure side of the system. Component damage and personal injury could result.

If the system has been opened for any repair, or the Refrigerant-12 charge lost, the system must be evacuated prior to charging.

Evacuation and charging is a combined procedure, and all gage lines must be purged with R-12 prior to charging.

There are two evacuation and charging procedures:

1. J 23500-01 Charging Station Method
2. Refrigerant Drum Method

NOTICE: Under no circumstances should alcohol be used in the system in an attempt to remove moisture. Damage to the system components could occur.

GAGE CALIBRATION

Prior to evacuation, check the low-pressure gage for proper calibration and determine if the vacuum pump is operating properly.

With the gage disconnected from the refrigeration system, be sure that the gage needle points to the center of "0." Tap the gage lightly a few times to be sure the pointer is not sticking. If necessary, calibrate as follows:

1. Remove the cover from the gage.
2. *Holding the gage pointer adjusting screw with one* hand, carefully force the pointer in the proper direction to position the pointer at the "0" position. Tap the gage to be sure the pointer is not sticking.
3. Replace the gage cover.

VACUUM SYSTEM CHECK

Before connecting a vacuum pump to the A/C system, connect the pump to the low-pressure gage to determine the vacuum pump capability. If the vacuum pump is unable to reach at least 711.2-736.6 mm (28" to 29" Hg) vacuum, check the system for leaks. If no leaks are found, the vacuum pump may require repair.

CHARGING STATION METHOD

Tool Required:
J 23500-01 Charging Station

Follow the charging station instructions provided with the charging station with the following exceptions:

1. Do not connect the high-pressure line to the air conditioning system.
2. Keep the high-pressure valve on the charging station closed at all times.
3. Perform the entire evacuation and charging procedure through the accumulator low side pressure *service fitting.*
4. Following these procedures will prevent the high-pressure side from being subjected to the charging station if an error in valve sequence is made during compressor operation.

REFRIGERANT DRUM METHOD

Tools Required:
J 23575-01 Manifold Gage Set
J 23390 Refrigerant Dispensing Valve

If the Refrigerant-12 drum is used, place it on a scale and note the total drum weight before charging. Watch the scale during charging to determine the amount of R-12 used (figure 25).

1. Connect manifold gage set as follows:
   a. Low-pressure gage to accumulator fitting.
   b. Gage set center hose to R-12 source.
   c. High-pressure gage to vacuum pump.
2. To begin evacuation, hook-up the manifold gage set and vacuum pump as shown, slowly open the high-side and low-side gage valves and start the vacuum pump. Pump the system until the low-side gage reaches 711.2--736.6 kPa (28"-29") vacuum.
   If the prescribed vacuum cannot be reached, close the vacuum control valve and turn off the pump. Look for a leak at the connections or the pump.
3. When the gage reaches the prescribed vacuum, the system is fully evacuated. Close the high-side gage set valve and turn off the vacuum pump.
4. Watch the low-side gage to be sure vacuum holds for 5 minutes. If vacuum holds, disconnect the vacuum hose at the gage set. Then, proceed with charging the system.

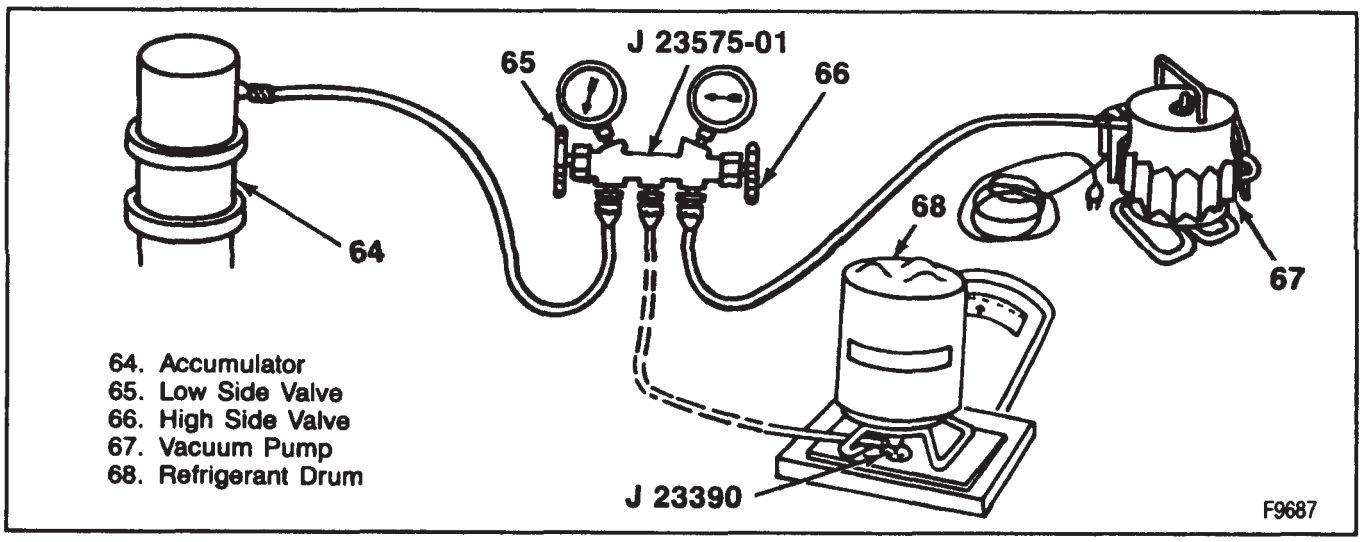

Figure 25—Charging the System

5. If vacuum does not hold for 5 minutes, charge the system with 0.227 Kg (1/2 lb.) of R-12 and check for leaks. Discharge the system again and repair any leaks.
6. Repeat the evacuation procedure.

CHARGING

1. Move the A/C mode control lever to "OFF." Start the engine and run until the engine is at normal operating temperature.
2. With the R-12 drum inverted, open the R-12 source valve(s). Allow 0.453 Kg (1 lb.) of liquid R-12 to flow into the system through the low-side service fitting on the accumulator.
3. As soon as 0.453 Kg (1 lb.) of R-12 has been added to the system, engage the compressor by setting the A/C mode lever to "NORM" and the blower speed lever to "HI" to draw in the rest of the R-12 charge.
   - To speed up the charging operation, a large-volume fan can be used to pass air over the condenser. If the condenser temperature remains below the charging cylinder temperature, Refrigerant-12 will enter the system more rapidly.
4. Turn off the R-12 source valve. Run the engine for 30 seconds to clear lines and gages.
5. With the engine running, remove the low-side charging hose adapter from the accumulator service fitting. Unscrew it rapidly to avoid excessive R-12 loss from the system.

CAUTION: Never remove a gage line from its adapter when the line is connected to the A/C system. Always remove the line adapter from the service fitting to disconnect a line. Do not remove the charging hose at the gage set while it is attached to the accumulator. This will result in the system being completely discharged, because the Schrader-type valve in the low-side service fitting is fully depressed. Complete discharge may cause personal injury due to escaping Refrigerant-12.

6. Replace the protective cap on the accumulator fitting.
7. Turn the engine off.
8. Check the system for leaks with a J 38505 Autobalance Refrigerant Leak Detector.
9. Start the engine.
10. With the system fully charged and checked for leaks, make a system performance check.

ON-VEHICLE SERVICE

COMPRESSOR REPLACEMENT

Remove or Disconnect (Figures 26 through 31)

1. Discharge and recover refrigerant from the system.
2. Drive belt. Refer to ENGINE COOLING (SECTION 6B1).
3. Electrical connections, as necessary.
4. Bolt (7) and washer (8).
5. Manifold (2) from the rear of the compressor.
6. Mounting bolts (9).
7. Compressor (1) from mounting bracket.
   - Drain and measure compressor oil.

Install or Connect (Figures 26 through 31)

- Drain compressor oil from new compressor.
- Refill new compressor with same amount of oil drained from old compressor. If less than 30

mL (1 fl. oz.) was drained from old compressor add 60 mL (2 fl. oz.).

1. Compressor (1) to mounting bracket.

NOTICE: For steps 2 and 4, refer to "Notice" on page 1B-1 of this section.

2. Mounting bolts (9).

Tighten

- Bolts (9) to 50 N·m (37 ft. lb.).

3. Manifold (2) to the rear of the compressor.
4. Washer (8) and bolt (7).

Tighten

- Bolt (7) to 34 N·m (25 ft. lb.).

5. Drive belt. Refer to ENGINE COOLING (SECTION 6B1).
6. Electrical connections, as necessary.
7. Refrigerant to the system.
   - Check the system for leaks.

EVAPORATOR TUBE REPLACEMENT

Remove or Disconnect (Figure 32)

1. Discharge and recover refrigerant from the system.
2. Screw (12).
3. Evaporator tube (5) from evaporator (10).
4. O-ring (11).
5. Evaporator tube (5) from condenser (4).
6. Evaporator tube assembly (5).
7. O-ring (11).

Install or Connect (Figure 32)

1. New O-ring (11).
   - Coat O-ring with 525 viscosity refrigerant oil.
2. Evaporator tube assembly (5).
3. Evaporator tube (5) to condenser (4).
4. New O-ring (11).
   - Coat O-ring with 525 viscosity refrigerant oil.
5. Evaporator tube (5) to evaporator (10).

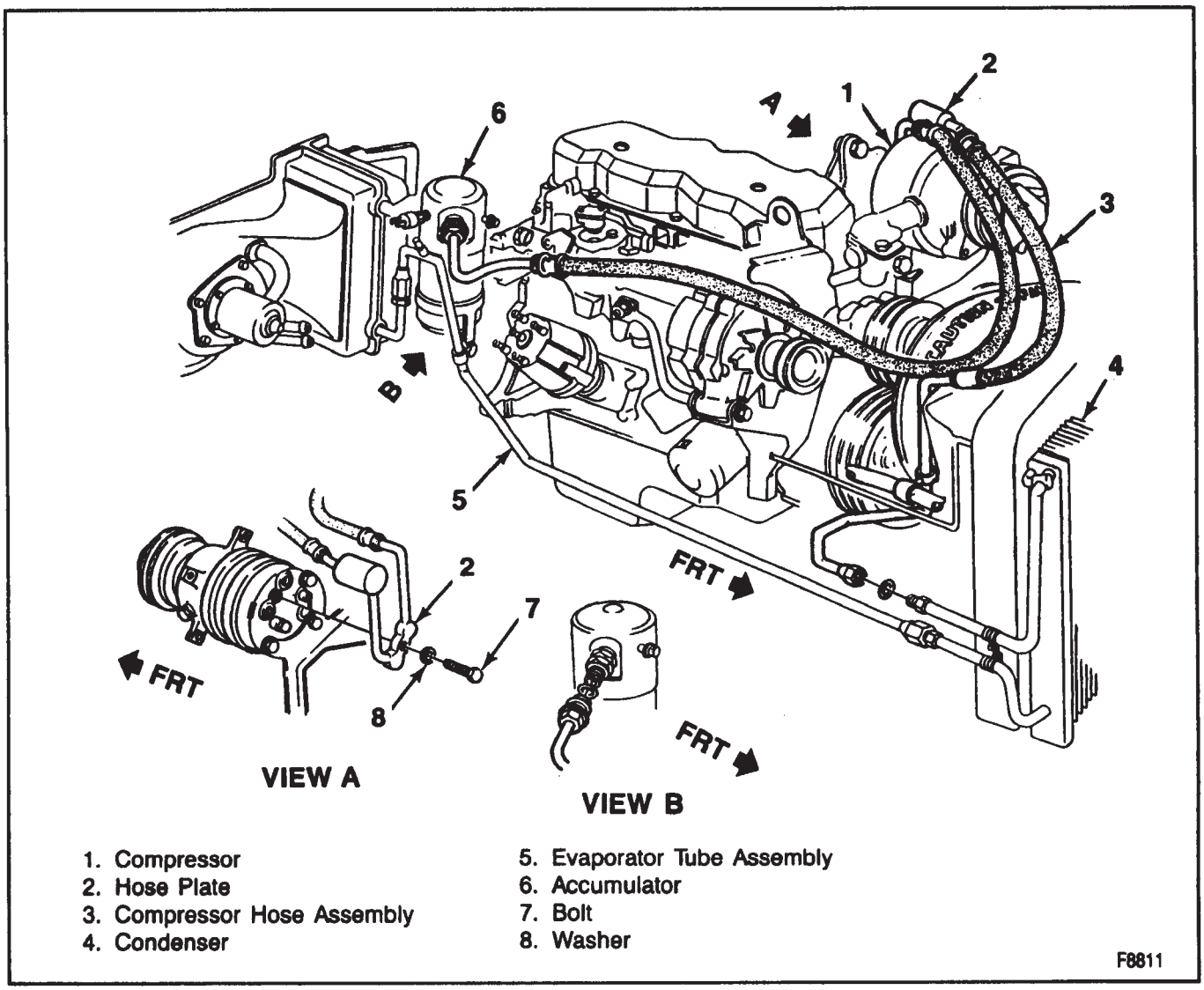

1. Compressor
2. Hose Plate
3. Compressor Hose Assembly
4. Condenser
5. Evaporator Tube Assembly
6. Accumulator
7. Bolt
8. Washer

Figure 26—Fitting and Hose Installation (2.5L (VIN A) Models)

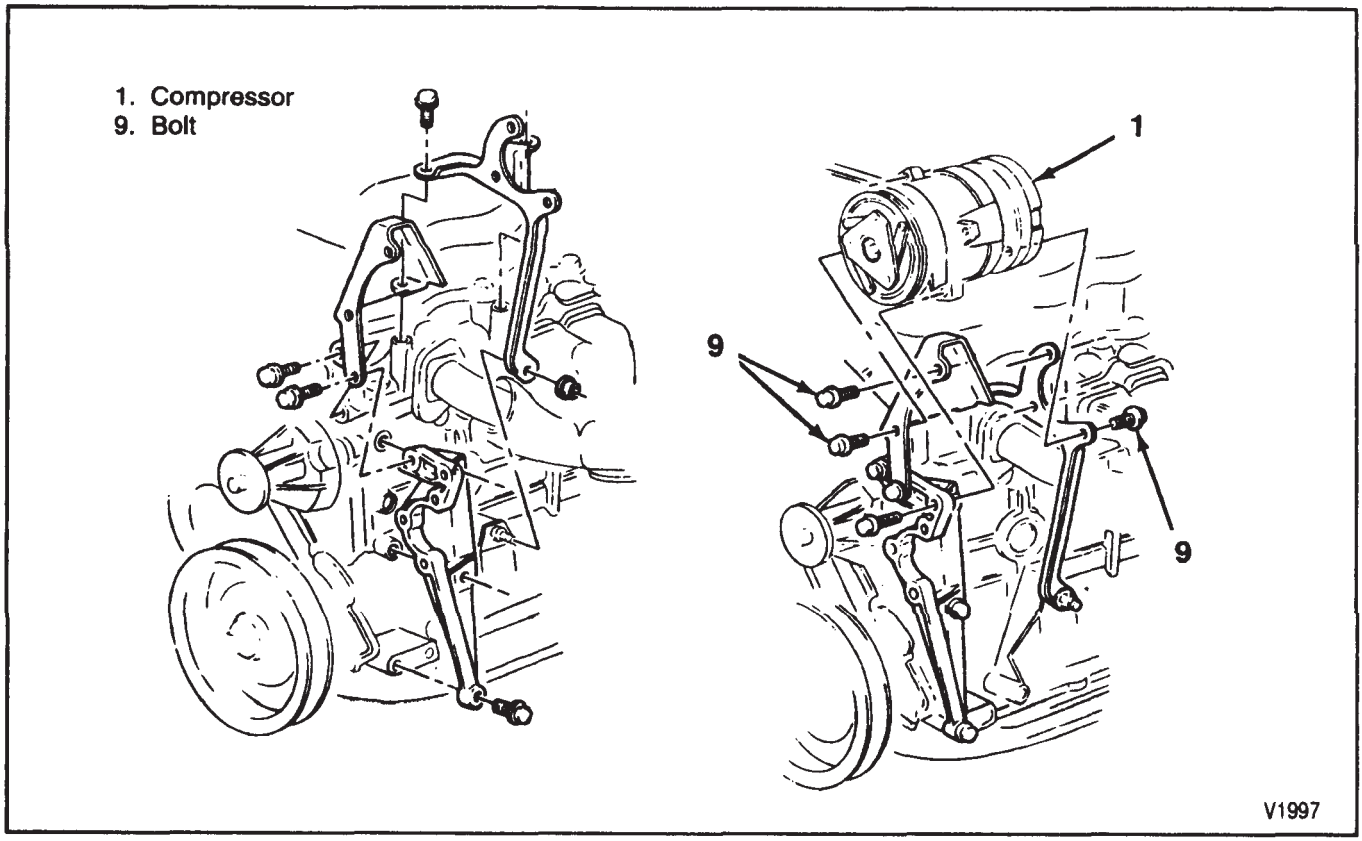

Figure 27—Compressor Mounting (2.5L (VIN A) Models)

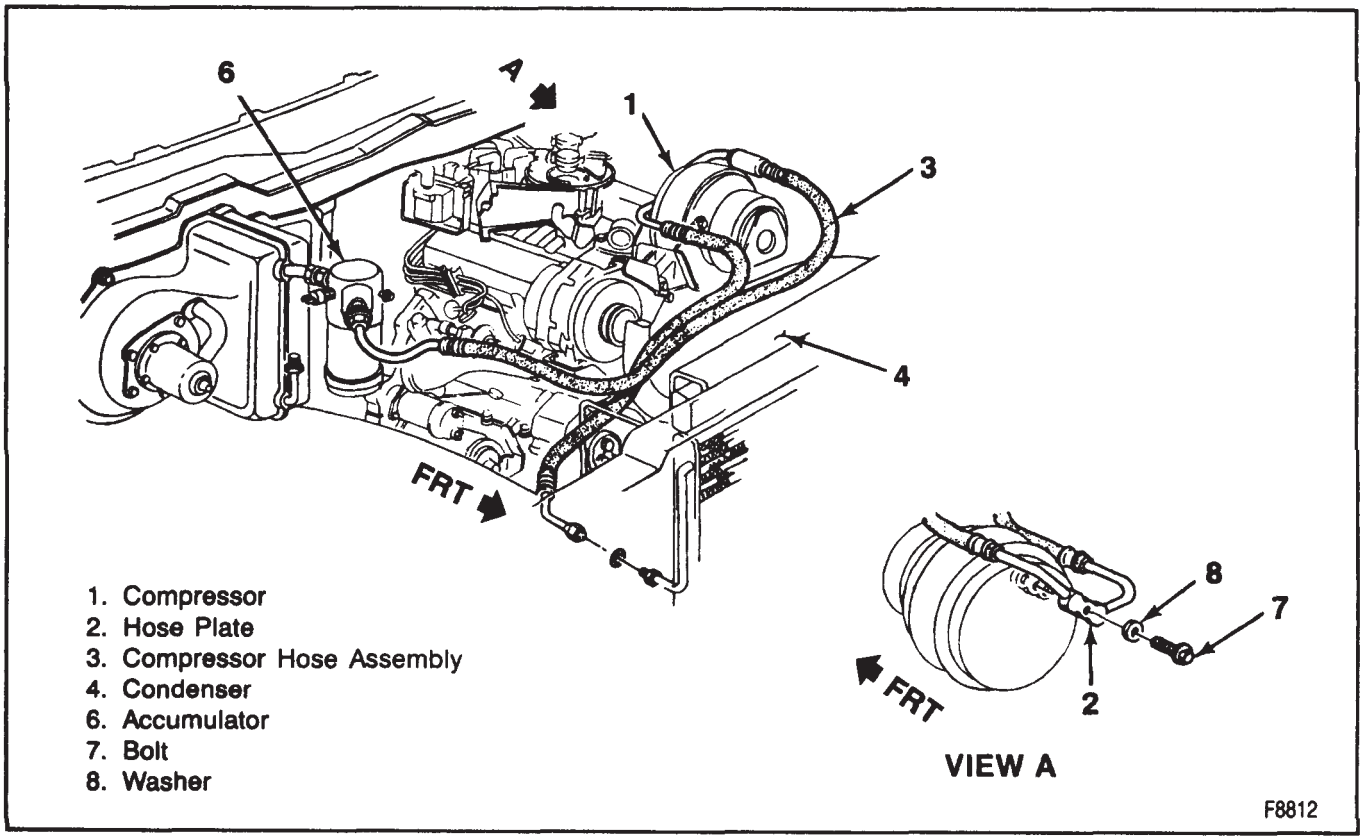

Figure 28—Fitting and Hose Installation (2.8L (VIN R) Models)

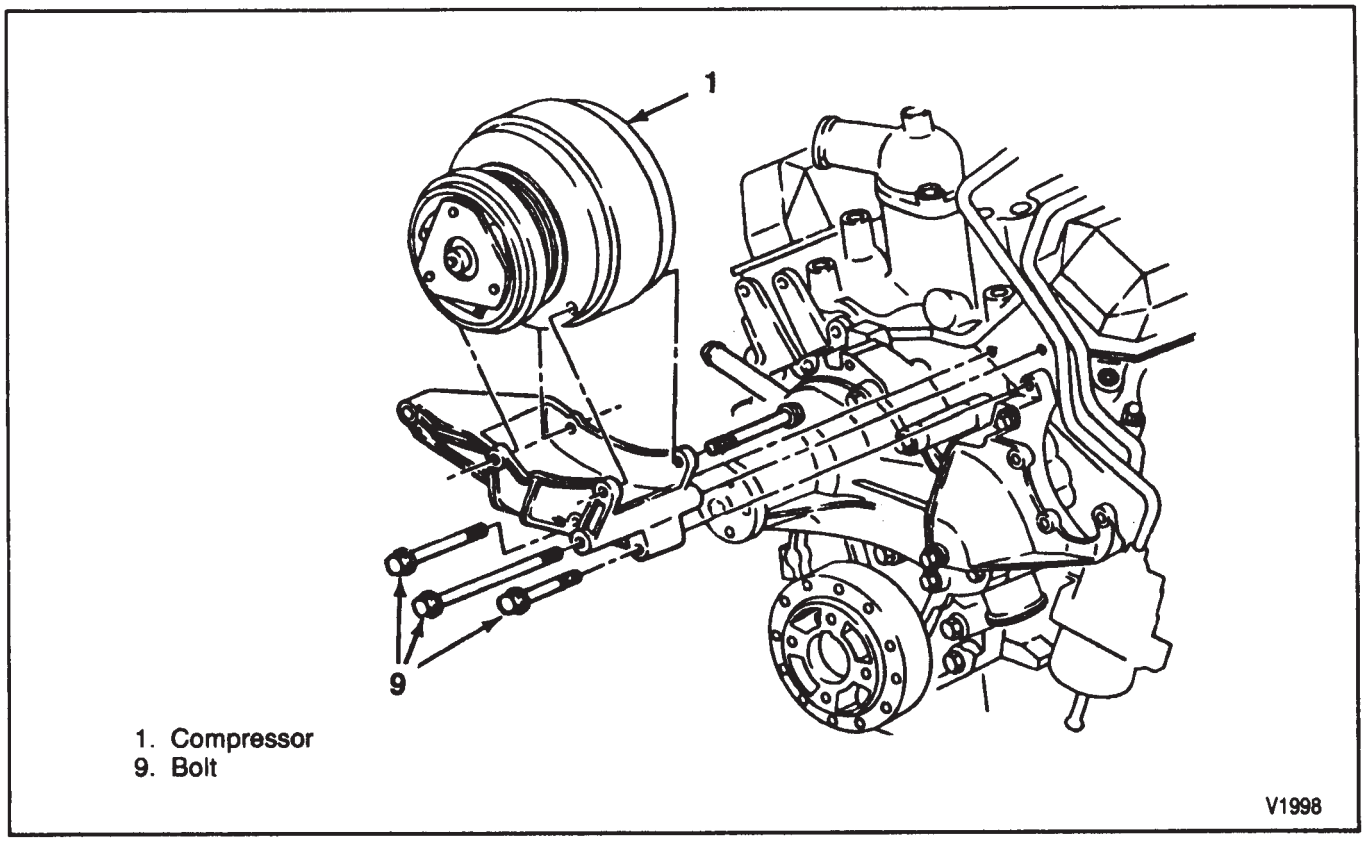

Figure 29—Compressor Mounting (2.8L (VIN R) Models)

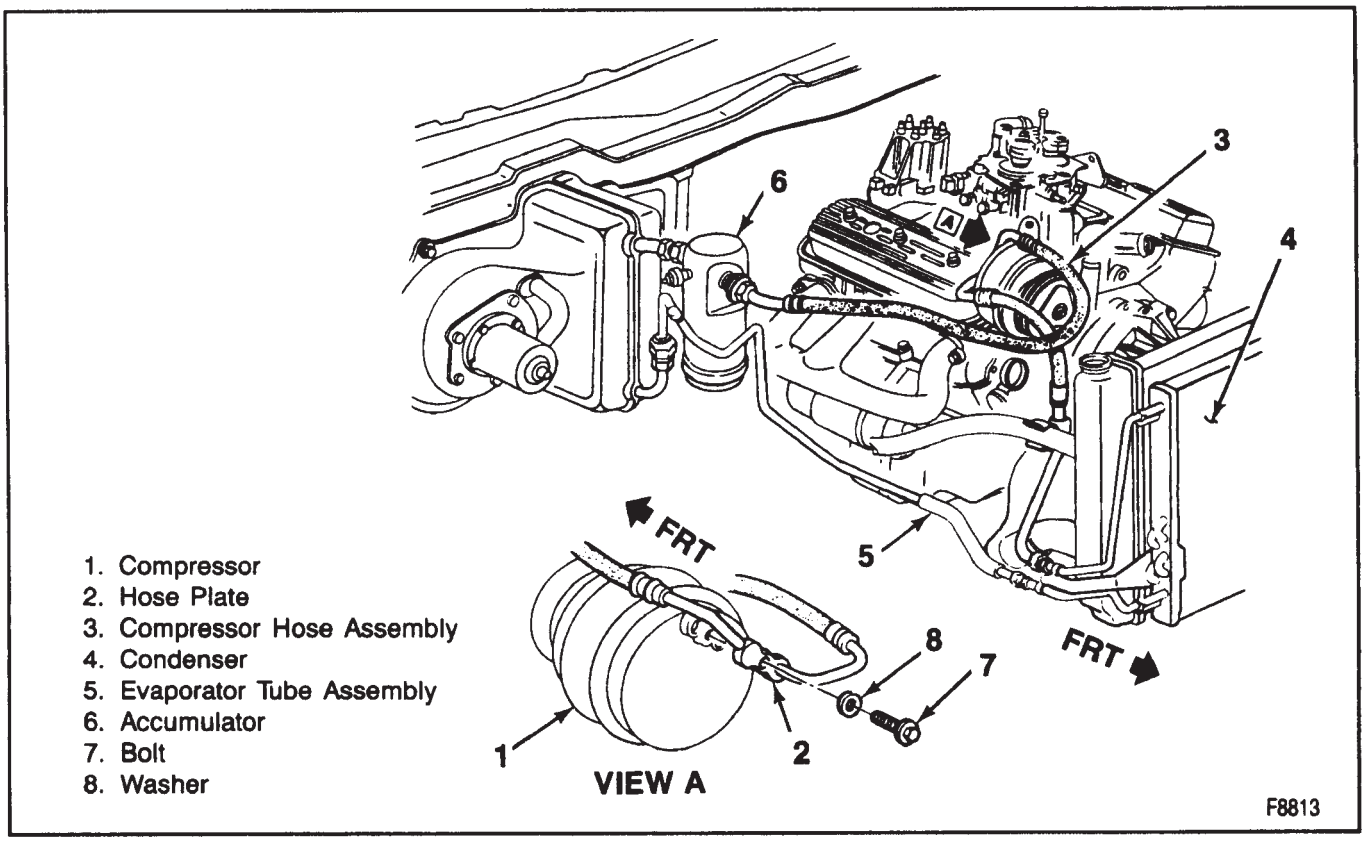

Figure 30—Fitting and Hose Installation (4.3L (VIN Z and W) Models)

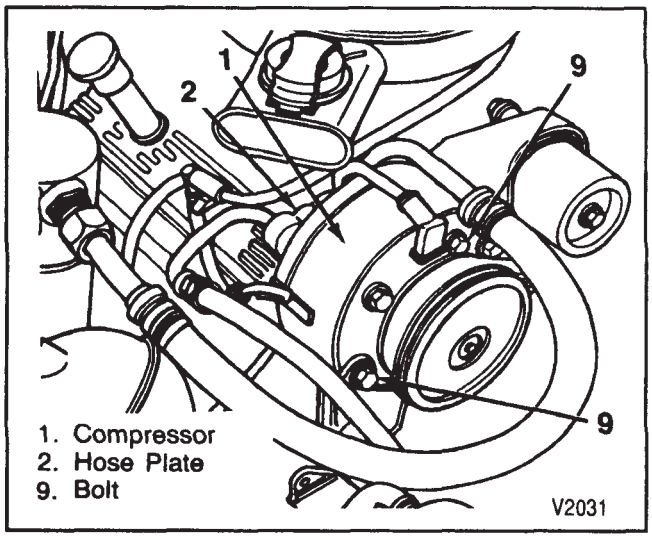

Figure 31—Compressor Mounting (4.3L (VIN Z and W) Models)

Tighten

- Condenser connection to 17 N·m (13 ft. lb.).
- Evaporator connection to 17 N·m (13 ft. lb.).

NOTICE: See "Notice" on page 1B-1 of this section.

6. Screw (12).
7. Refrigerant to the system.
   - Check the system for leaks.

COMPRESSOR RELAY REPLACEMENT

Remove or Disconnect (Figure 33)

1. Electrical connector from relay (13).
2. Relay (13) from multi-use bracket (14).

Install or Connect (Figure 33)

1. Relay (13) to multi-use bracket (14).
2. Electrical connector to relay (13).
   - Check circuit operation.

CONDENSER REPLACEMENT

Remove or Disconnect (Figures 26, 28, 30, 32, and 34)

1. Discharge and recover refrigerant from the system.
2. Upper fan shroud. Refer to RADIATOR (SECTION 6B2).
3. Radiator. Refer to RADIATOR (SECTION 6B2).
4. Refrigerant hose (3) from condenser (4) (figures 26, 28, and 30).
5. Evaporator tube (5) from condenser (4) (figure 32). Refer to "Evaporator Tube Replacement" in this section.
6. Bolts (18) and retainers (17) (figure 34).
7. Upper insulators (16).
8. Condenser (4).

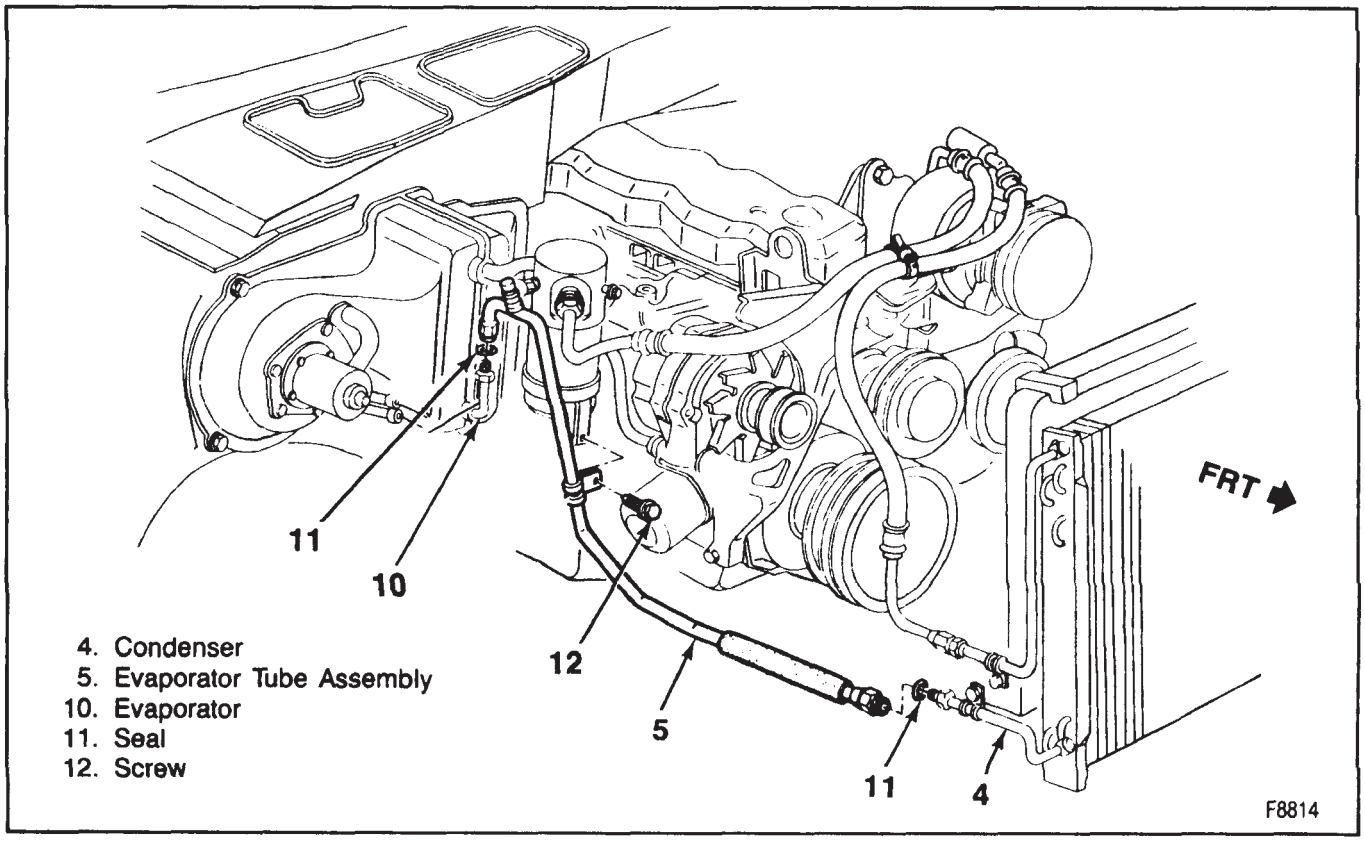

Figure 32—Evaporator Tube Replacement

Install or Connect (Figures 26, 28, 30, 32, and 34)

1. Condenser (4). Refer to "Refrigerant Oil Distribution," if replacing condenser.
2. Upper insulators (16) (figure 34).

NOTICE: See "Notice" on page 1B-1 of this section.

3. Retainers (17) and bolts (18).

Tighten

- Bolts (18) to 1.4 N·m (12 in. lb.).

4. Evaporator tube (5) to condenser (4) (figure 32). Refer to "Evaporator Tube Replacement" in this section.
5. Refrigerant hose (3) to condenser (4) (figures 26, 28, and 30).

Tighten

- Refrigerant hose (3) to 24 N·m (18 ft. lb.).
- Evaporator tube (5) to 17 N·m (13 ft. lb.).

6. Radiator. Refer to RADIATOR (SECTION 6B2).
7. Upper fan shroud. Refer to RADIATOR (SECTION 6B2).
8. Refrigerant to the system.
   - Check the system for leaks.

ACCUMULATOR REPLACEMENT

The accumulator assembly has a service replacement kit which includes two seals (O-rings) for the inlet and outlet connections. The desiccant is NOT serviced separately—it is part of the sealed accumulator assembly. Refer to "Refrigerant Oil Distribution" for presence of refrigerant oil and service conditions when removing the accumulator from the vehicle to measure the oil.

Replace the accumulator when:

1. A physical perforation produces a leak.
2. The (orifice) screen experiences continued or repeated plugging.

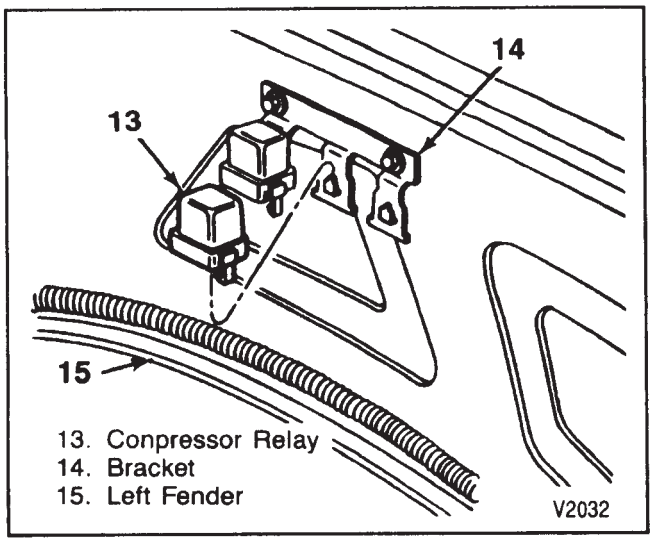

Figure 33—Compressor Relay (2.5L (VIN A) and 2.8L (VIN R) Models)

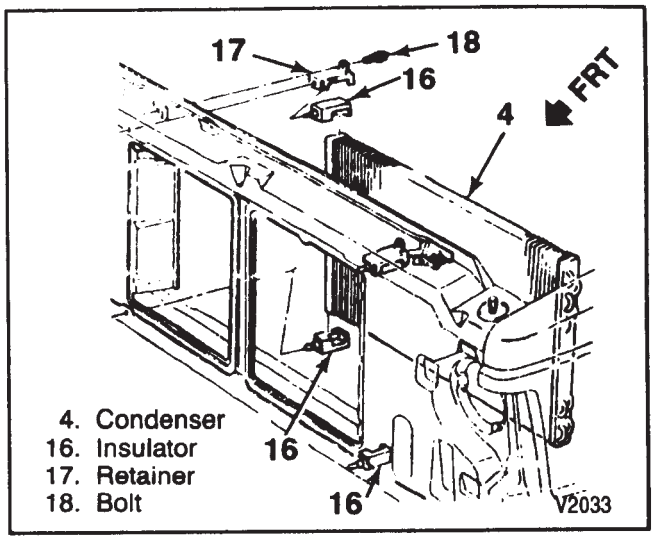

Figure 34—Condenser Mounting

Remove or Disconnect (Figures 35, 36 and 37)

1. Discharge and recover refrigerant from the system.
2. Evaporator (10) from accumulator (6) (figure 36).
3. Compressor hose assembly (3) from accumulator (6).
4. O-rings.
   - Cap or plug the open lines.
5. Electrical connections, as necessary.
6. Screw (38) and bracket (40).
7. Accumulator (6).
   - Install sealing caps if accumulator is not being replaced.

Install or Connect (Figures 35, 36, and 37)

1. Accumulator (6). Refer to "Refrigerant Oil Distribution," if replacing accumulator.

NOTICE: See "Notice" on page 1B-1 of this section.

2. Bracket (40) and screw (38) (figure 36).
3. Electrical connections, as necessary.
4. New O-rings.
5. Compressor hose assembly (3) to accumulator (6).
6. Evaporator (10) to accumulator (6).

Tighten

- Evaporator connection to 41 N·m (30 ft. lb.).
- Compressor hose connection to 41 N·m (30 ft. lb.).

7. Refrigerant to the system.
   - Check the system for leaks.

EXPANSION TUBE (ORIFICE) REPLACEMENT

Tool Required:

J 26549-D Orifice Tube Remover and Installer or Equivalent

Remove or Disconnect (Figures 32 and 35)

1. Discharge and recover refrigerant from the system.
2. Evaporator tube (5) from evaporator (10) (figure 32).
3. O-ring (11).
4. Expansion (orifice) tube, using J 26549-D.

In the event that difficulty is encountered during the removal of a restricted or plugged expansion (orifice) tube, the following procedure is recommended:

A. Remove as much of any impacted residue as possible.

B. Carefully apply heat with heat gun (hair drier, epoxy drier or equivalent) approximately 7 mm (1/4 inch) from dimples on inlet pipe. Do not overheat pipe.

NOTICE: If the system has a pressure switch near the expansion tube location, it should be removed prior to heating the pipe to avoid damage to switch.

C. While applying heat, use expansion tube removal tools J 26549-D or equivalent to grip the expansion (orifice) tube. Use a turning motion along with a push-pull motion to loosen the impacted expansion(orifice) tube and remove it.

Install or Connect (Figures 32 and 35)

Tool Required:
J 26549-D Orifice Tube Remover and Installer or Equivalent

1. Expansion (orifice) tube, using J 26549-D.

Important

- Install the "shorter screen end" first into the evaporator.

2. New O-ring (11) (figure 32).
3. Evaporator tube (5) to evaporator (10).

Tighten

- Evaporator tube (5) to 17 N.m (13 ft. lb.).

4. Refrigerant to the system.
   - Check the system for leaks.

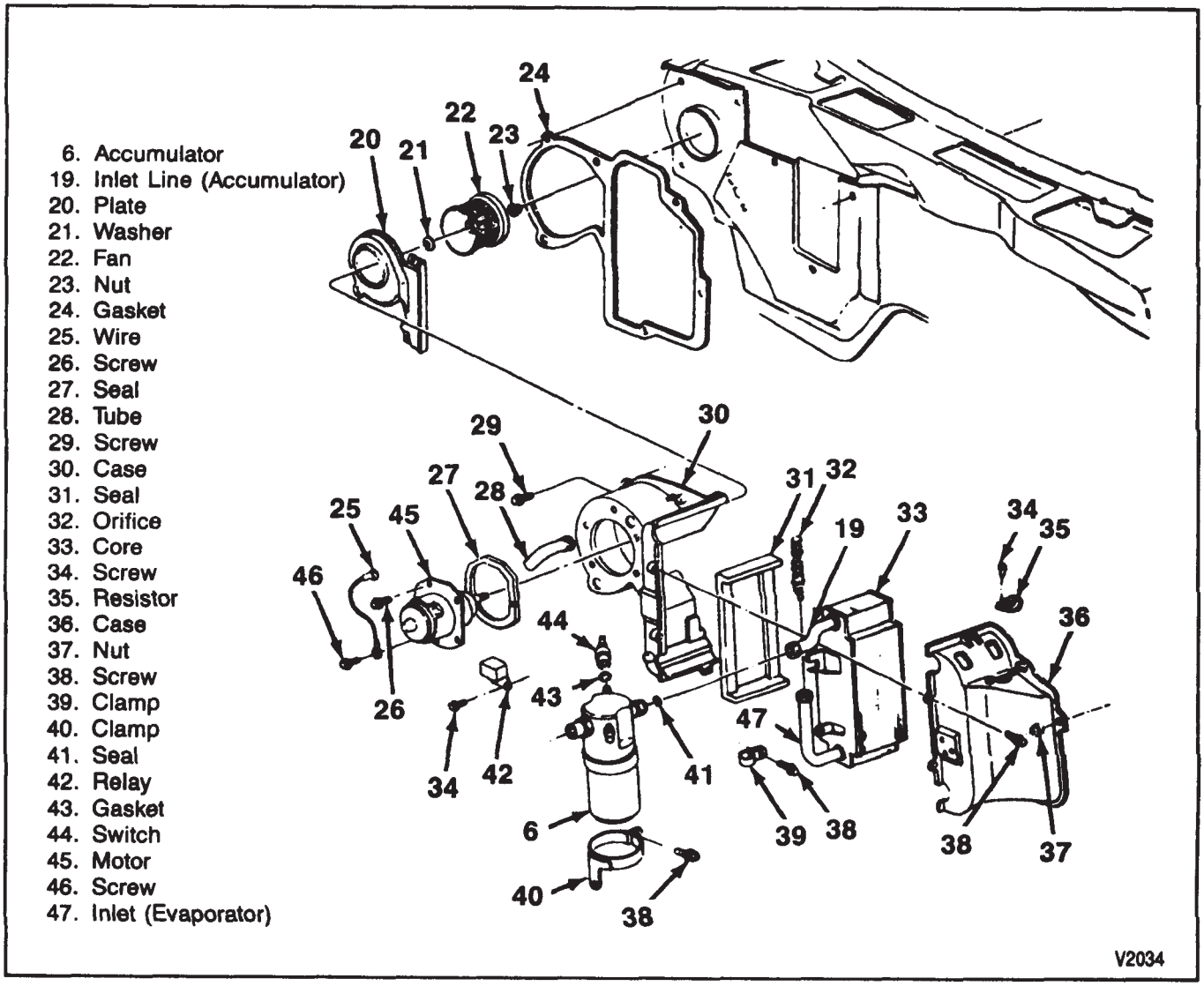

Figure 35—Evaporator and Blower Assembly Component View

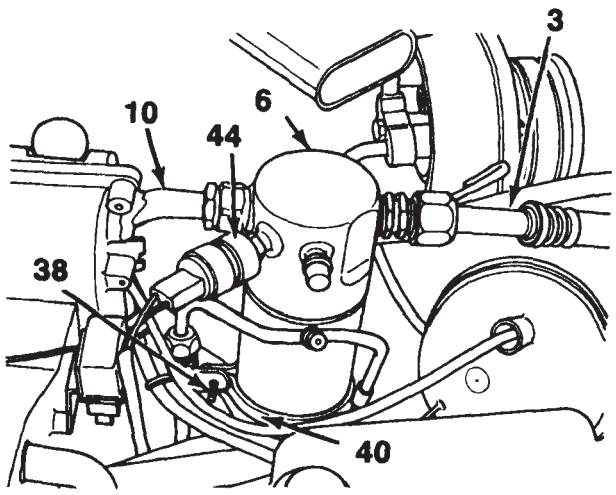

3. Compressor Hose Assembly
6. Accumulator
10. Evaporator
38. Screw
40. Bracket
44. Switch

F8810

Figure 36—Accumulator Replacement

HEATER HOSE REPLACEMENT

For heater hose replacement procedures, refer to HEATING AND VENTILATION (SECTION 1A).

BLOWER MOTOR REPLACEMENT

Remove or Disconnect (Figure 35)

1. Electrical connectors, as necessary.
2. Screws (26).
3. Blower motor (45).
4. Blower motor fan. Refer to "Blower Motor Fan Replacement" in this section.

Install or Connect (Figure 35)

1. Blower motor fan. Refer to "Blower Motor Fan Replacement" in this section.
2. Blower motor (45).

NOTICE: See "Notice" on page 1B-1 of this section.

3. Screws (26).
4. Electrical connectors, as necessary.

BLOWER MOTOR FAN REPLACEMENT

Remove or Disconnect (Figure 38)

1. Blower motor and fan assembly. Refer to "Blower Motor Replacement" in this section.
2. Using a hot knife, cut a slot in cage motor shaft sleeve in three places. Starting 12.7 mm (1/2-inch) from base of shaft, start cut from fan dome and continue to cut through the plastic material to the end of the shaft so that the fan splits from the shaft.
3. Fan cage from blower motor shaft by pulling straight out.

Alternative Removal Methods

1. *Using small wheel puller:*
   - Remove tip of fan at end of motor shaft using soldering iron or cutting pliers.
   - Draw fan from motor shaft using a small puller. Hook legs of puller between fan lower rib and motor mounting plate. Thread center post of puller against the end of the motor shaft exposed in the above step.
2. Using drill press or arbor press:
   - Remove tip of fan at end of motor shaft using soldering iron or cutting pliers.
   - Support fan with blocks, angle iron, etc. while allowing the motor to be suspended (figure 38).
   - *Place steady pressure on tip of motor shaft,* with a drill press or small arbor press and pin arrangement. Motor should fall freely from the fan after moving motor shaft about 12.7 mm (1/2-inch).

NOTICE: Do not use force on motor to remove or install fan. Do not apply force to motor housing to seat fan on motor, or force motor/shaft bearing damage could result. Do not apply pressure to fan rim. Be sure correct replacement part is used.

Install or Connect (Figure 39)

1. Press fan onto shaft.
   - Grasp fan by dome and apply hand pressure to fan dome, insert fan on motor shaft until slightly seated on shaft.
   - Place fan and motor on a combination of 10 mm x 3/8" drive socket and 1/2" x 3/8" reducer (figure 39).
   - While steadying the fan and motor, apply steady force to rear of motor shaft using a drill press or small arbor press and pin.

Adjust

- Fan cage, using spacers, to a clearance of 5.5 mm (0.22 inches) to motor mount plate.

2. Blower motor and fan assembly. Refer to "Blower Motor Replacement" in this section.

- Check circuit operation.

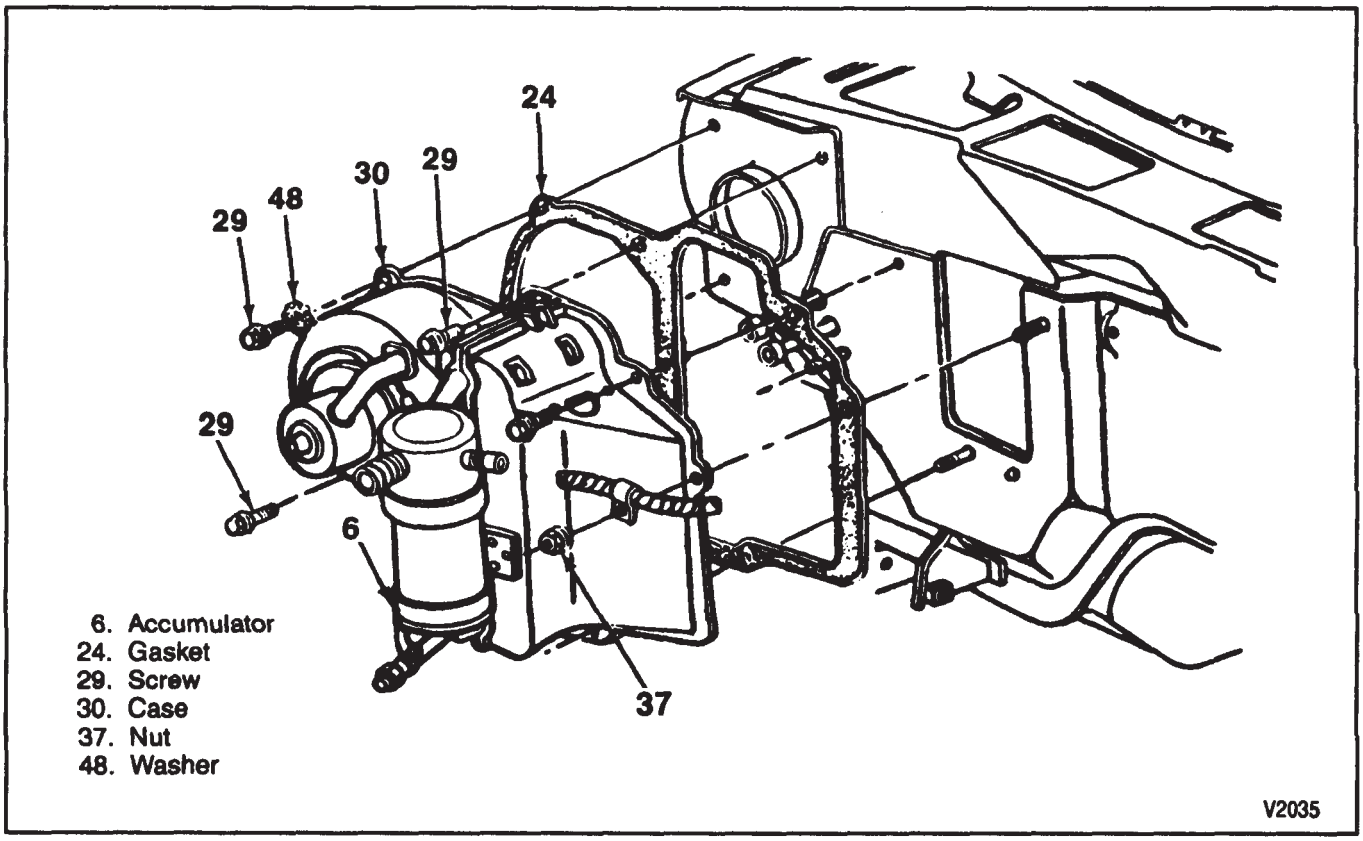

Figure 37—Evaporator and Blower Case Replacement

BLOWER MOTOR RELAY REPLACEMENT

Remove or Disconnect (Figure 35)

1. Electrical connectors, as necessary.
2. Screws (34).
3. Relay (42).

Install or Connect (Figure 35)

1. Relay (42).

NOTICE: See "Notice" on page 1B-1 of this section.

2. Screws (34).
3. Electrical connectors, as necessary.
   - Check circuit operation.

BLOWER MOTOR RESISTOR REPLACEMENT

The blower resistor is mounted on the blower side of the blower-evaporator case.

Remove or Disconnect (Figure 35)

1. Electrical connectors, as necessary.
2. Screws (34).
3. Resistor (35).

Install or Connect (Figure 35)

1. Resistor (35).

NOTICE: See "Notice" on page 1B-1 of this section.

2. Screws (34).
3. Electrical connectors, as necessary.
   - Check circuit operation.

EVAPORATOR AND BLOWER ASSEMBLY REPLACEMENT

Remove or Disconnect (Figures 32, 36, and 37)

1. Discharge and recover refrigerant from the system.
2. Electrical connectors, as necessary.
3. Compressor hose assembly (3) from accumulator (6) (figure 36).
4. Evaporator tube (5) from evaporator (10) (figure 32). Refer to "Evaporator Tube Replacement" in this section.
   - Cap or plug open lines.
5. Screws (29) and nuts (37).
6. Blower case (30).
7. Gasket (24).

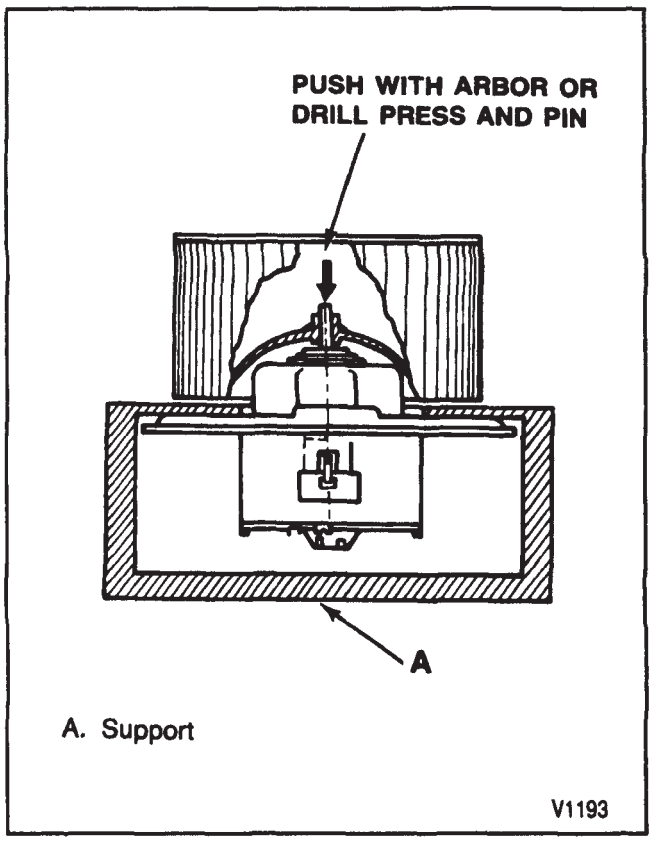

Figure 38—Push On Fan-Removal Procedure

Install or Connect (Figures 32, 36, and 37)

1. Gasket (24).
2. Blower case (30).

NOTICE: See "Notice" on page 1B-1 of this section.

3. Screws (29) and nuts (37) (figure 37).
4. Evaporator tube (5) to evaporator (10) (figure 32). Refer to "Evaporator Tube Replacement" in this section.
5. Compressor hose assembly (3) to accumulator (6) (figure 36).

Tighten

- Evaporator tube connection to 41 N·m (30 ft. lb.).
- Compressor hose assembly to 41 N·m (30 ft. lb.).

6. Electrical connectors, as necessary.
7. Refrigerant to the system.
   - Check the system for leaks.

EVAPORATOR CORE REPLACEMENT

Remove or Disconnect (Figures 32, 35, 36, and 37)

1. Discharge and recover refrigerant from the system.
2. Drain cooling system. Refer to ENGINE COOLING (SECTION 6B1).
3. Heater hoses from core. Refer to "Heater Hose Replacement" in this section.
4. Resistor (35) with the wire attached (figure 35).
5. Electrical connectors, as necessary.
6. Evaporator tube (5) from evaporator (10) (figure 32). Refer to "Evaporator Tube Replacement" in this section.
7. Compressor hose assembly (3) from the accumulator (6) (figure 36).
8. Screws (29) and nuts (37) (figure 37).
9. Blower assembly from the vehicle.
10. Accumulator (6). Refer to "Accumulator Replacement" in this section.
11. Screws (38) (figure 35).
12. Case sections (30 and 36).
13. Core (33).

Install or Connect (Figures 32, 35, 36, and 37)

1. Core (33). Refer to "Refrigerant Oil Distribution," if replacing core.
2. Case sections (30 and 36).

NOTICE: See "Notice" on page 1B-1 of this section.

3. Screws (38) (figure 35).
4. Accumulator (6). Refer to "Accumulator Replacement" in this section.
5. Blower assembly to the vehicle.
6. Screws (29) and nuts (37) (figure 37).

Tighten

- Screws (29) to 3 N·m (27 in. lb.).
- Nuts (37) to 2 N·m (18 in. lb.).

7. Compressor hose assembly (3) to accumulator (figure 36).
8. Evaporator tube (5) to evaporator (10) (figure 32). Refer to "Evaporator Tube Replacement" in this section.

Tighten

- Evaporator tube connection to 41 N·m (30 ft. lb.).
- Compressor hose assembly to 41 N·m (30 ft. lb.).

9. Electrical connectors, as necessary.
10. Resistor (35) (figure 35).
11. Heater hoses to core. Refer to "Heater Hose Replacement" in this section.
12. Refill cooling system. Refer to ENGINE COOLING (SECTION 6B1).

13. Refrigerant to the system.
    - Check the system for leaks.

CONTROL ASSEMBLY REPLACEMENT

Remove or Disconnect (Figures 40 and 41)

1. Screws (50).
   - Pull control assembly away from instrument panel.
2. Cable (53) from control assembly (49) (figure 41).
3. Vacuum connections from control assembly (49).
4. Electrical connections from control assembly (49).
5. Control assembly (49).

Install or Connect (Figures 40 and 41)

1. Cables (53) to the control assembly (49).
2. Vacuum connections to the control assembly (49).
3. Electrical connections to the control assembly (49).
4. Control assembly (49).

NOTICE: See "Notice" on page 1B-1 of this section.

5. Screws (50).

TEMPERATURE CABLE ADJUSTMENT

Adjust

1. Remove the instrument panel storage compartment. Refer to INTERIOR TRIM (SECTION 10A4).
2. Remove the retainer from the lever.
3. Remove the cable.
4. Bend the cable to length or shorten.
5. Reattach the cable to the lever and move the temperature lever in the full range of its travel and listen for the temperature door opening and closing. Adjust the cable as necessary.
6. Install the retainer.
7. Install the instrument panel storage compartment. Refer to INTERIOR TRIM (SECTION 10A4).

VACUUM TANK REPLACEMENT

The vacuum tank is installed on the left front (driver's side) wheel fender in the engine compartment.

Remove or Disconnect (Figures 42, 43, 44 and 45)

1. Vacuum hose (56).
2. Screws.
3. Tank (55).

Install or Connect (Figures 42, 43, 44, and 45)

1. Tank (55).

NOTICE: See "Notice" on page 1B-1 of this section.

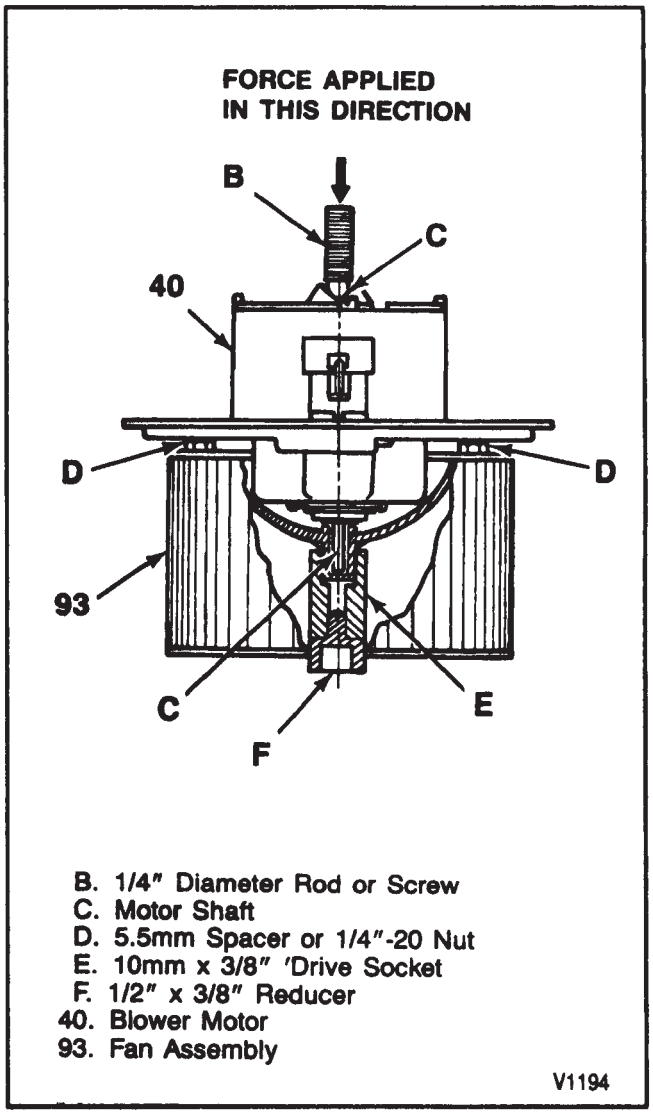

Figure 39—Push On Fan-Assembly Procedure

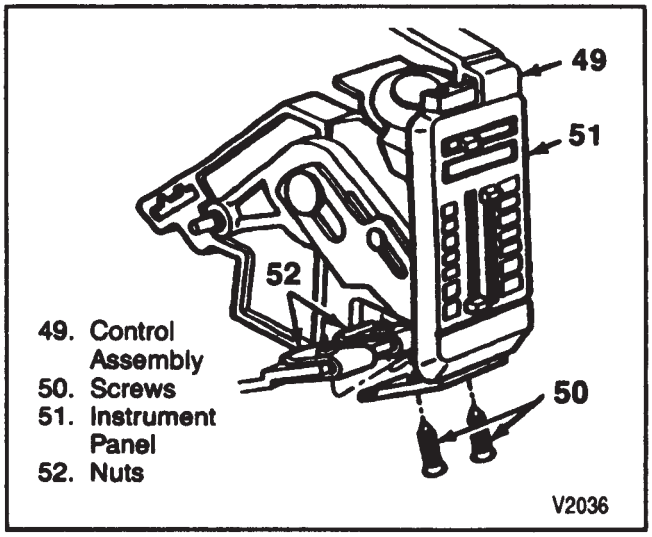

Figure 40—Control Assembly Replacement

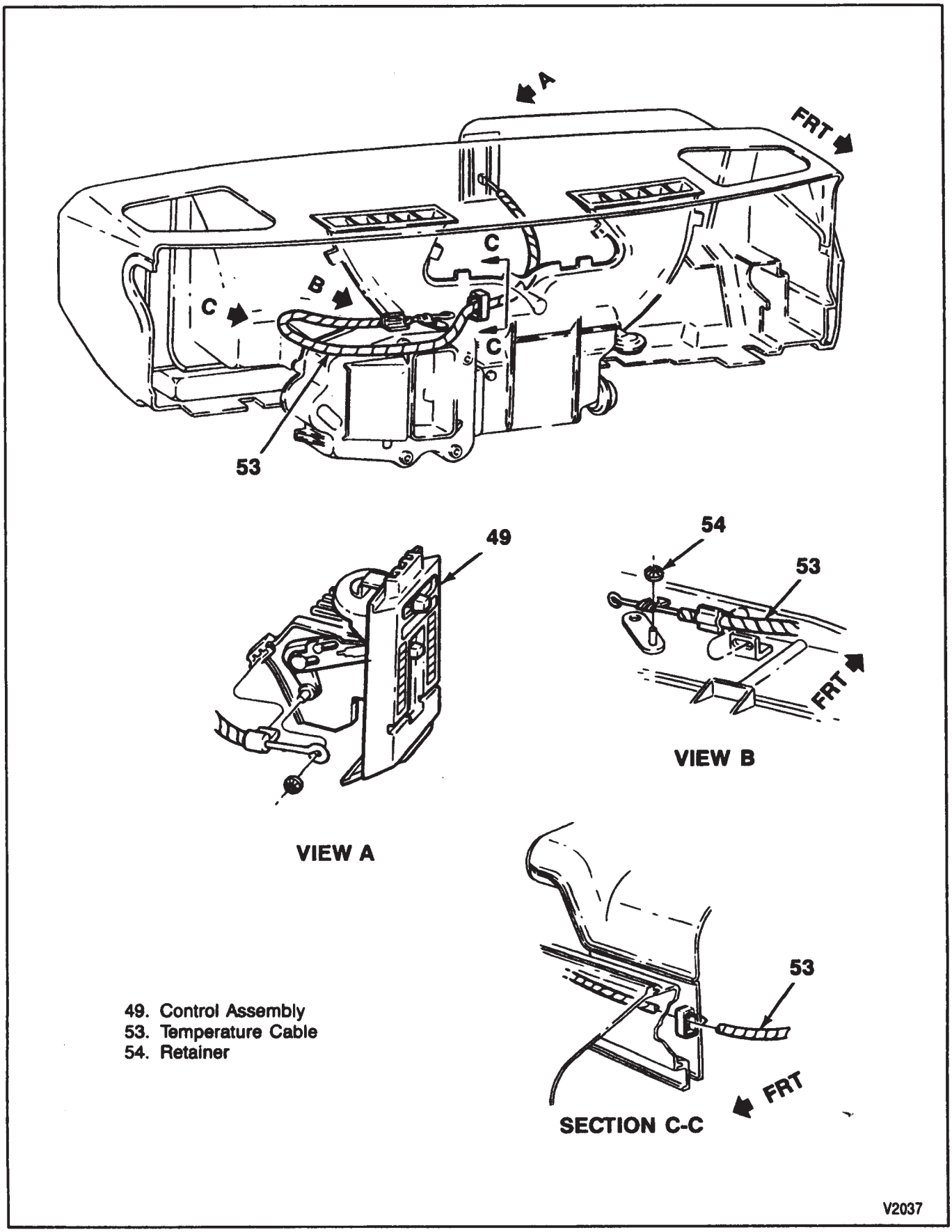

49. Control Assembly
53. Temperature Cable
54. Retainer

Figure 41—Temperature Cable Replacement

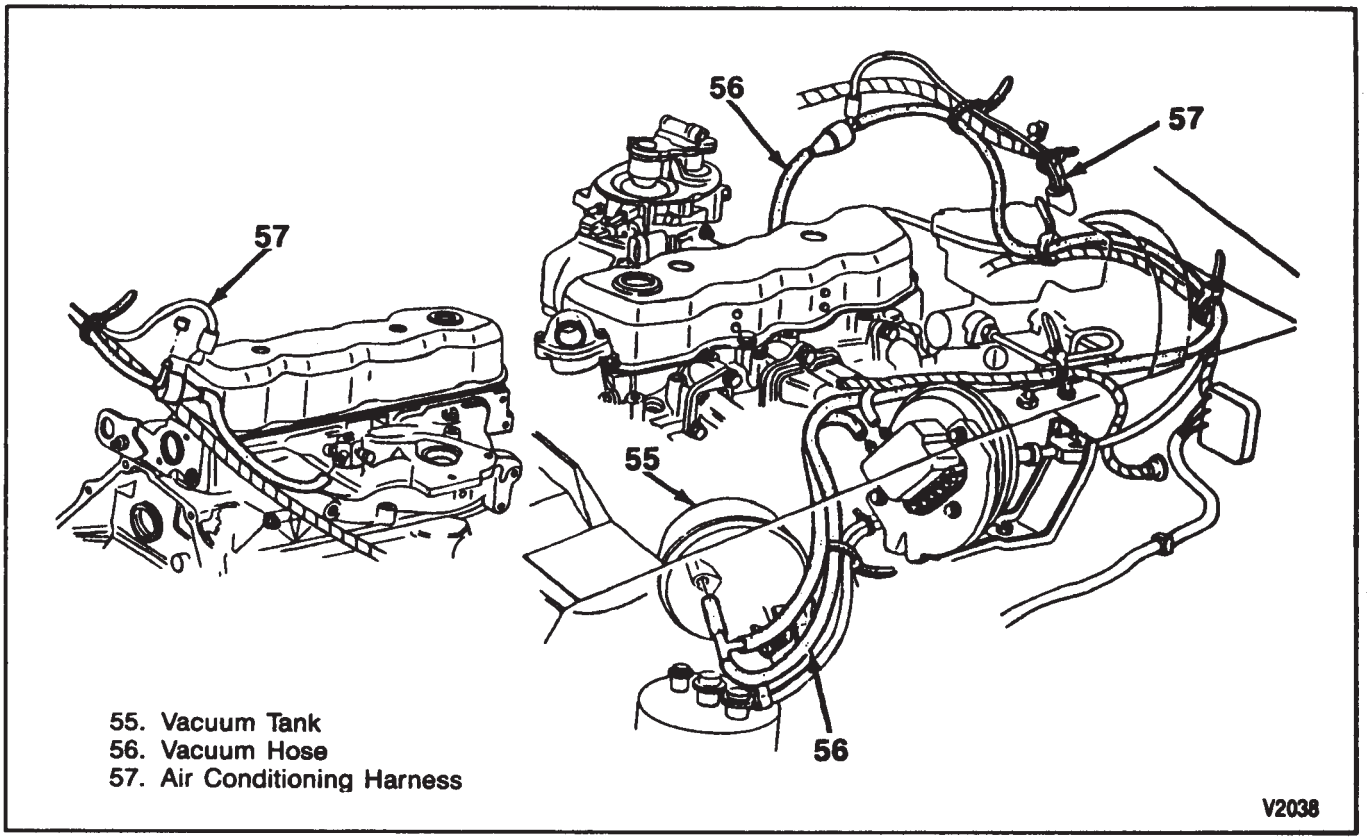

Figure 42—2.5L (VIN A) Engine Vacuum Line Routing

2. Screws.

Tighten

- Screws to 3 N·m (27 in. lb.).

3. Vacuum hose (56).

VACUUM LINES— ENGINE COMPARTMENT

For vacuum line routing, refer to figures 42, 43, 44 and 45.

AIR INLET VALVE ASSEMBLY REPLACEMENT

Remove or Disconnect (Figure 46)

1. Windshield wiper arms. Refer to WIPER-WASHER SYSTEMS (SECTION 8E).
2. Cowl vent grille. Refer to SHEET METAL (SECTION 2B).
3. Bolt (62).
4. Link (61) from the actuator (58).
5. Bolts (60).
6. Valve assembly (59).

Install or Connect (Figure 46)

1. Valve assembly (59).

NOTICE: For steps 2 and 4, refer to page 1B-1 of this section.

2. Bolts (60).

Tighten

- Bolts (60) to 2 N·m (18 in. lb.).

3. Link (61) to the actuator (58).
4. Bolt (62).

Tighten

- Bolt (62) to 2 N·m (18 in. lb.).

5. Cowl vent grille. Refer to SHEET METAL (SECTION 2B).
6. Windshield wiper arms. Refer to WIPER-WASHER SYSTEMS (SECTION 8E).

PLENUM SIDE VENT ACTUATOR REPLACEMENT

Remove or Disconnect (Figure 47)

1. Front door sill plate. Refer to INTERIOR TRIM (SECTION 10A4).
2. Cowl side vent cover. Refer to INTERIOR TRIM (SECTION 10A4).
3. Vacuum line from the actuator (63).
4. Valve assembly (66).
5. Actuator (63).

Install or Connect (Figure 47)

1. Actuator (63).

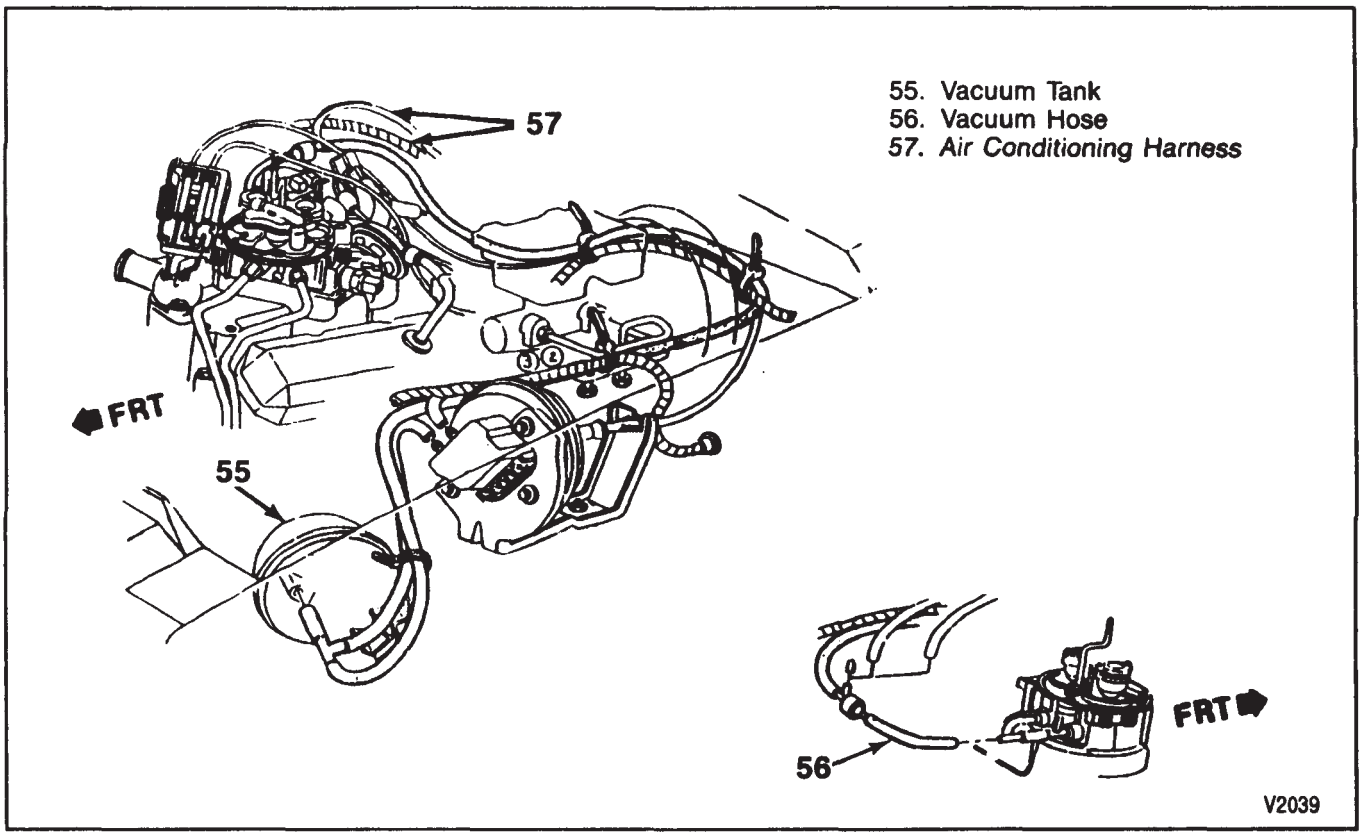

Figure 43—2.8L (VIN R) Engine Vacuum Line Routing

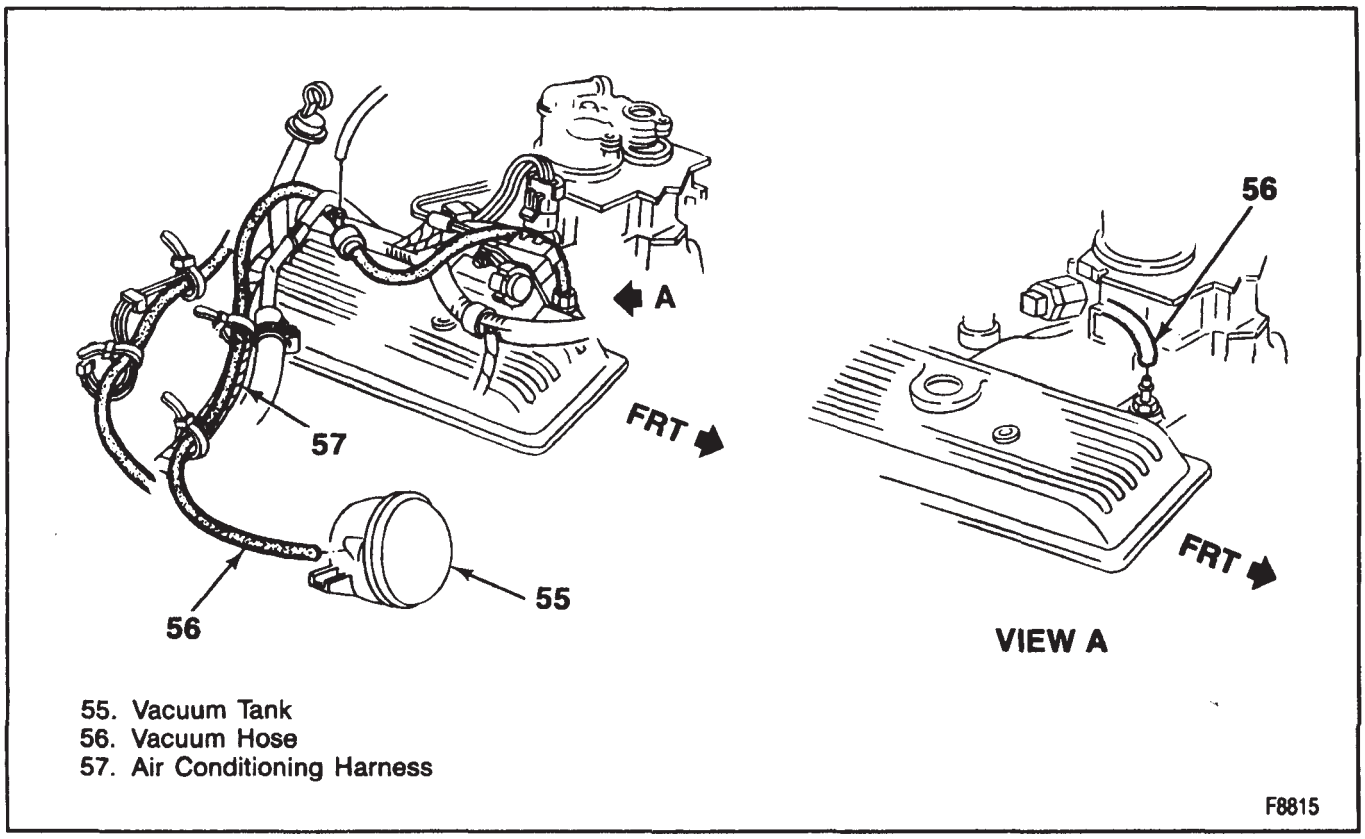

Figure 44—4.3L (VIN Z) Engine Vacuum Line Routing

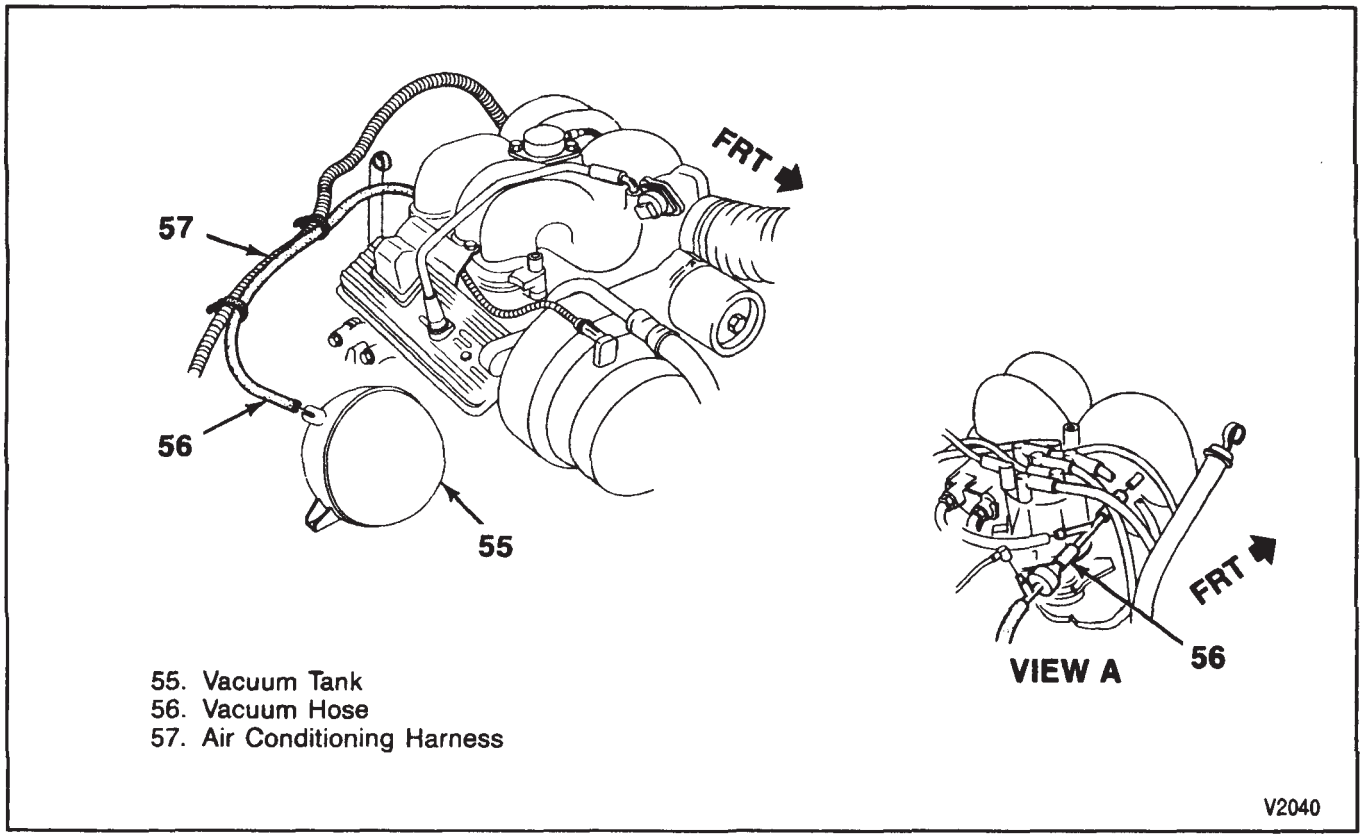

Figure 45—4.3L (VIN W) Engine Vacuum Line Routing

2. Valve assembly (66) to the vehicle.
3. Vacuum line to the actuator (63).
4. Cowl side vent cover. Refer to INTERIOR TRIM (SECTION 10A4).
5. Front door sill plate. Refer to INTERIOR TRIM (SECTION 10A4).

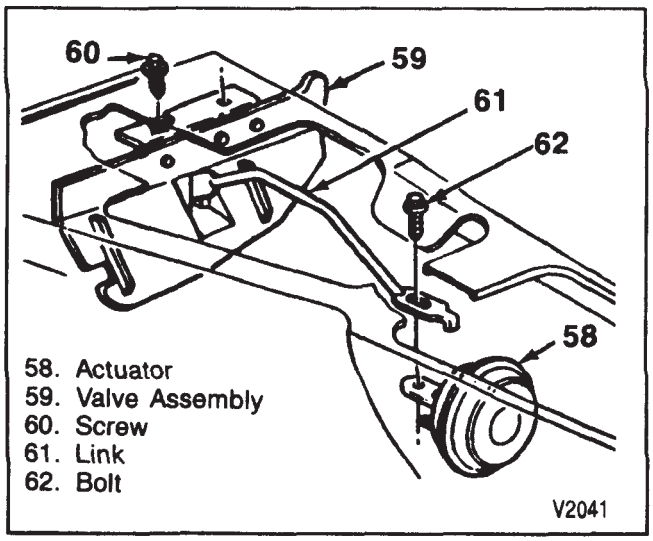

Figure 46—Plenum Air Inlet Valve Assembly

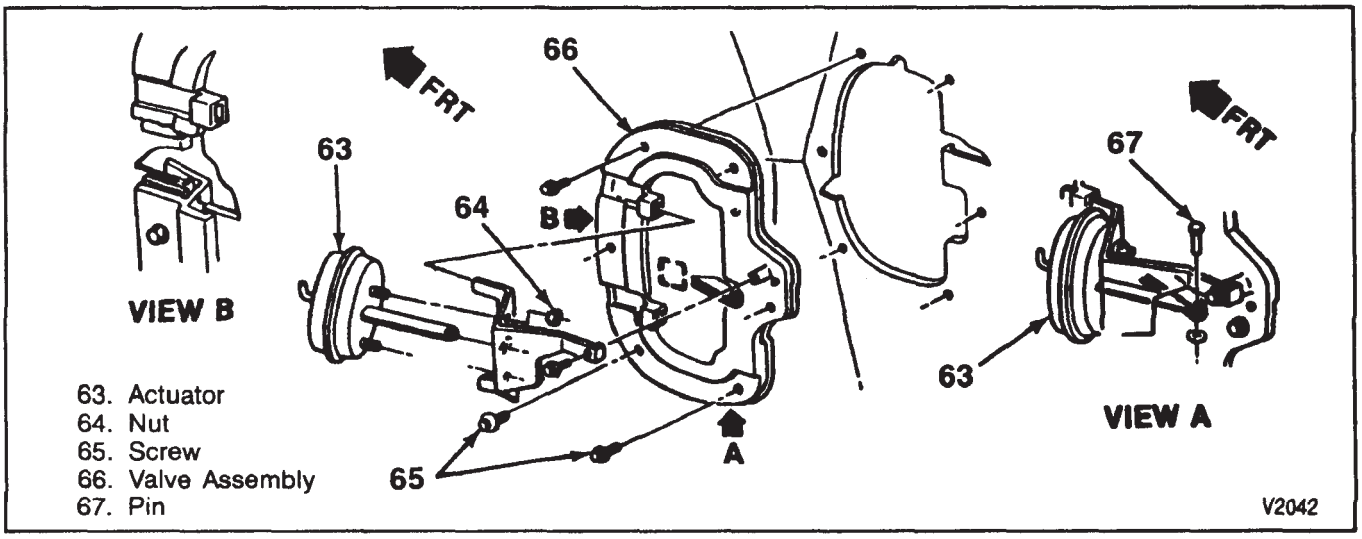

Figure 47—Plenum Side Vent Actuator

SPECIFICATIONS

GENERAL SPECIFICATIONS

Compressor	Harrison R-4 Harrison V-5
Type	4 Cylinder Radial (R-4) 5 Cylinder Axial (V-5)
Displacement	10.0 Cu. In. (R-4) 9.2 Cu. In. (V-5)

SYSTEM CAPACITIES

Refrigerant	1.134 Kg (2 lb. 8 oz.)
525 Viscosity Compressor Oil	236 ml (8 fl. oz.)

FASTENER TIGHTENING SPECIFICATIONS

ITEM	N·m	Ft. Lbs.
Compresor-to-Mounting Bracket Bolt	50	37
Refrigerant Hose-to-Compressor Bolt	34	25
Evaporator Tube-to-Condenser	17	13
Evaporator Tube-to-Evaporator	17	13
Condenser Mounting Bolt	1.4	12*
Refrigerant Hose-to-Condenser	24	18
Evaporator-to-Accumulator	41	30
Refrigerant Hose-to-Accumulator	41	30
Evaporator Case Mounting Bolt	3	27*
Evaporator Case Mounting Nut	2	18*
Vacuum Tank Mounting Screw	3	27*

*In. Lbs.

T2731

SPECIAL TOOLS

1.

J 21213-A

2. 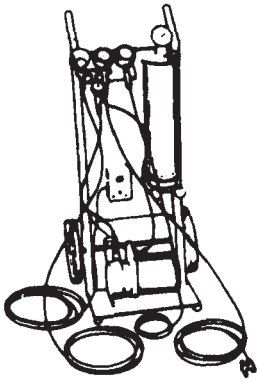

J 23500-01

3.

J 23575-01

4. 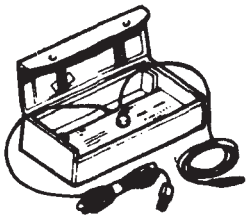

J 26934

5. 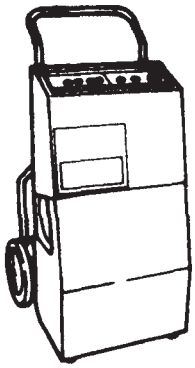

J 38100-C

6. 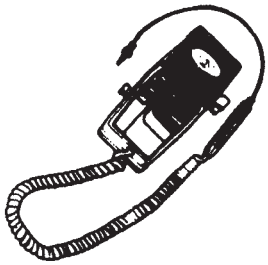

J 38505

1. Four Jack-Dual Range Temperature Tester
2. Portable Charging Station
3. Complete Manifold Assembly
4. H-10 Leak Detector
5. Refrigerant Recovery and Recycling Station
6. Autobalance Refrigerant Leak Detector

F9701

SECTION 2

FRAME AND SHEET METAL

CONTENTS

SUBJECT	PAGE
Frame and Bumpers	2A-1
Sheet Metal	2B-1

SECTION 2A

FRAME AND BUMPERS

NOTICE: When fasteners are removed, always reinstall them at the same location from which they were removed. If a fastener needs to be replaced, use the correct part number fastener for that application. If the correct part number fastener is not available, a fastener of equal size and strength (or stronger) may be used. Fasteners that are not reused, and those requiring thread locking compound will be called out. The correct torque value must be used when installing fasteners that require it. If the above conditions are not followed, parts or system damage could result.

CONTENTS

SUBJECT	PAGE
General Description	2A- 1
Diagnosis of the Frame	2A- 2
Minimizing Frame Service	2A- 3
Checking Frame Alignment	2A- 3
Straightening Frames	2A- 5
Repairing Cracks	2A- 5
Welding	2A- 6
On-Vehicle Service	2A- 7
Front Bumper Replacement	2A- 7
Front Bumper Filler Replacement	2A- 7
Rear Step Bumper Replacement	2A- 8
Rear Bumper Replacement	2A-10
Rear Bumper Filler Replacement	2A-11
License Plate Bracket Replacement	2A-11
Trailer Hitches	2A-12
Tow Hooks	2A-14
Specifications	2A-15

GENERAL DESCRIPTION

Proper frame alignment is important to assure normal life and functioning of many other parts of the vehicle. If the vehicle has been involved in a fire, collision, or has been overloaded, there is cause to check the frame alignment. If, for any other reason alignment is suspected, it should be checked. A procedure for this is described later in this section under "Checking Frame Alignment."

It is possible that certain conditions make the frame appear to be out of alignment when, in fact, it's not. These conditions are also described under "Checking Frame Alignment."

Terms used later in this section are briefly defined below:

1. SECTION MODULUS—This is a measure of the strength of a frame, based on height, width, thickness and shape of the side rails. It does not account for the strength of the material used in the frame.
2. YIELD STRENGTH—This is a measure of the strength of the material from which the frame is made. It is the maximum load [kPa(psi)] that can be placed on a material and still have it return to its original shape.
3. RESISTANCE TO BENDING MOMENT (RBM)—This is a single measure of frame strength that accounts for both the section modulus and the strength of the material used. (It is the product of section modulus and yield strength.)
4. SAG—This refers to a frame or side rail that is bent down from where it should be.
5. BUCKLE—This refers to the condition where one entire frame rail is moved forward from, or to the rear of, its correct alignment with the other rail.
6. TWIST—This refers to the condition where the entire frame has been twisted. One rail will basically slope up while the other rail will basically slope down.
7. SIDEWAYS—This refers to a side rail that is bent to the side of where it should be.
8. TRACKING—This refers to the alignment of the vehicle axles with each other. A misaligned frame can cause improper tracking. If the vehicle is tracking correctly, all axles will be parallel to each other and perpendicular to the center line of frame.
9. WEB—The vertical part of a channel-type frame rail.
10. DIAMOND—The conition or effect that an accident or or heavy duty towing, from a corner of the frame, tend to have on the frame. The end result is a diamond effect.

DIAGNOSIS OF THE FRAME

PROBLEM	POSSIBLE CAUSE	CORRECTION
Sag	1. Loads greater than the frame is designed to carry. 2. Uneven load distribution. 3. Abrupt changes in section modulus. (For a brief definition of section modulus, see the "Description" at the beginning of this section. 4. Improper body, or accessory, mounting: — Holes drilled in the flange of the frame rail. — Too many holes in the web section of the rail. — Holes in the web section which are too close to each other. — Four or more holes in the same vertical line of the rail web. — Welds on the flange, particularly across the flange or along its edge. — Cutting holes in the rail with a torch. — Cutting notches anywhere on the rails. 5. A fire involving the vehicle. 6. A collision involving the vehicle. 7. The use of equipment for which the frame has not been designed or reinforced.	1-7. Straighten and reinforce the frame as described later in this section. See "Straightening Frames."
Buckle	1. The use of equipment such as snow plows for which the frame was not designed. 2. A collision involving the vehicle. 3. A fire involving the vehicle. 4. In addition to these causes, refer to possible causes 3 and 4 under "Sag.: These may contribute to "Buckle."	1-4. Straighten and reinforce the frame as described later in this section. See "Straightening Frames."

DIAGNOSIS OF THE FRAME (cont'd)

PROBLEM	POSSIBLE CAUSE	CORRECTION
Sidesway	1. A collision involving the vehicle. 2. A fire involving the vehicle. 3. The use of equipment such as snow plows for which the frame was neither designed nor properly reinforced. 4. In addition to these causes, refer to possible causes 3 and 4 under "Sag." These may be contributing factors.	1-4. Straighten and reinforce the frame as described later in this section. See "Straightening Frames."
Diamond	1. A collision involving the vehicle. 2. Towing another vehicle with a chain attached to one corner of the frame.	1-2. Straighten and reinforce the frame as described later in this section. See "Straightening Frames."
Twist	1. An accident or collision involving the vehicle. 2. Operating the vehicle in very rough terrain.	1-2. Straighten and reinforce the frame as described later in this section. See "Straightening Frames."
Improper Tracking	1. Frame is out of alignment. 2. Front or rear axle has shifted. 3. Incorrect wheel alignment may make the vehicle appear to be tracking incorrectly.	1. Replace or weld and reinforce rail. Ream bolt holes and replace with larger bolts if necessary. Retighten bolts. 2. Replace or weld and reinforce the rail. See the appropriate heading, later in this section.
		D0094

MINIMIZING FRAME SERVICE

Generally, frame service can be minimized or eliminated by minimizing the concentration of stress in small areas of the frame.

1. Vehicles should be used only for those purposes for which they were designed.
   - They should not be overloaded.
   - They should be loaded evenly; localized loads should be avoided.
   - Do not operate the vehicle on extremely rough terrain.
   - Take into account the forces that will be placed on a frame from the operation of equipment such as snow plows when picking a frame for a new vehicle or reinforcing a frame.
2. Follow recommended practices when repairing a frame or when mounting a body or equipment on a frame.
   - Avoid sudden changes in the section modulus.
   - Do not drill holes in the frame rail flanges.
   - Space holes in the web section of a rail at least 13 mm (1/2-inch) from one another.
   - Use existing holes whenever possible.
   - Do not cut holes with a torch.
   - Do not overheat the frame rails.
   - Avoid welding on the flanges.
   - Do not allow four or more holes to exist on the same vertical line of the web.

CHECKING FRAME ALIGNMENT

The main parts of a frame are the side rails and crossmembers. The rails carry the load and the crossmembers stabilize the rails.

Types of frame misalignment can be divided into five groups. The five groups are sag, buckle, diamond, sideways, and twist. For a brief definition of these terms, refer to " General Description" at the beginning of this section.

A misaligned frame rail may have moved forward from, up or down from, or to the side of where it should be. These possibilities must be checked.

The easiest way to check frame alignment is with gages made for this purpose. Detailed instructions are normally supplied with gages at the time of purchase. Therefore, instructions for gage use are not given in this manual.

It is possible to check certain portions of frame alignment without the proper gages. The procedure is described later in this section.

Whether alignment is checked with or without gages, the vehicle must be parked on a level section of floor.

Certain conditions call for preliminary checks before actually checking the frame. Suspension or axle problems may make it appear that the vehicle frame is out of alignment. If an axle has shifted, "Diamond" or "Sideways" may appear to exist when, in fact, they do not. A weak spring may make the vehicle appear to have a twisted frame.

A visual inspection of the top and bottom flanges of each rail may reveal the specific area where sag or buckle exists. In the case of sag, wrinkles may appear on the top of the upper flange; such wrinkles are definite evidence of sag. Wrinkles on the bottom of the lower flange are definite evidence of buckle.

DETERMINING THE FRAME CENTERLINE (Figures 1 through 3)

1. Move the vehicle to a level, well-lighted section of the floor.
2. Make a diagram of the frame on the floor beneath the vehicle as follows:
   a. Using a plumb bob, transfer points 1, 2, 11, and 12 from the inside of the web to the floor. Mark the points.
   b. Using a plumb bob, transfer the remaining points from the outside of the web to the floor. Mark the points. The actual placement of these points is not so important as is the fact that the points must be taken from the same place on both the right and left frame rail.
3. Move the vehicle away from the points on the floor.
4. Measure the distance from the centerline of the slotted hole (shown in figure 9) in each bumper bracket at points 1 and 2. This distance should be 684 mm (26.9 inches).
5. Measure the distance from the inside web portion of each frame rail at points 11 and 12. This distance should be 1018 mm (40 inchs).
6. Make a mark on the floor exactly halfway between points 1 and 2. Make a similar mark between points 11 and 12.
7. Use a chalk line to mark a line through the point. This is a centerline of the frame.

HORIZONTAL CHECK

1. Measure the distance between the frame rails, and the centerline at points 3—10. Each pair of corresponding points should be an equal distance from the centerline within 3 mm (1/8-inch). Example: Points 3 and 4 should measure equally from the centerline as should points 5 and 6, 7 and 8, and points 9 and 10.
2. Measure diagonally from point 1 to point 6, and from point 2 to point 5. Mark the floor where the diagonals pass the centerline. The diagonals

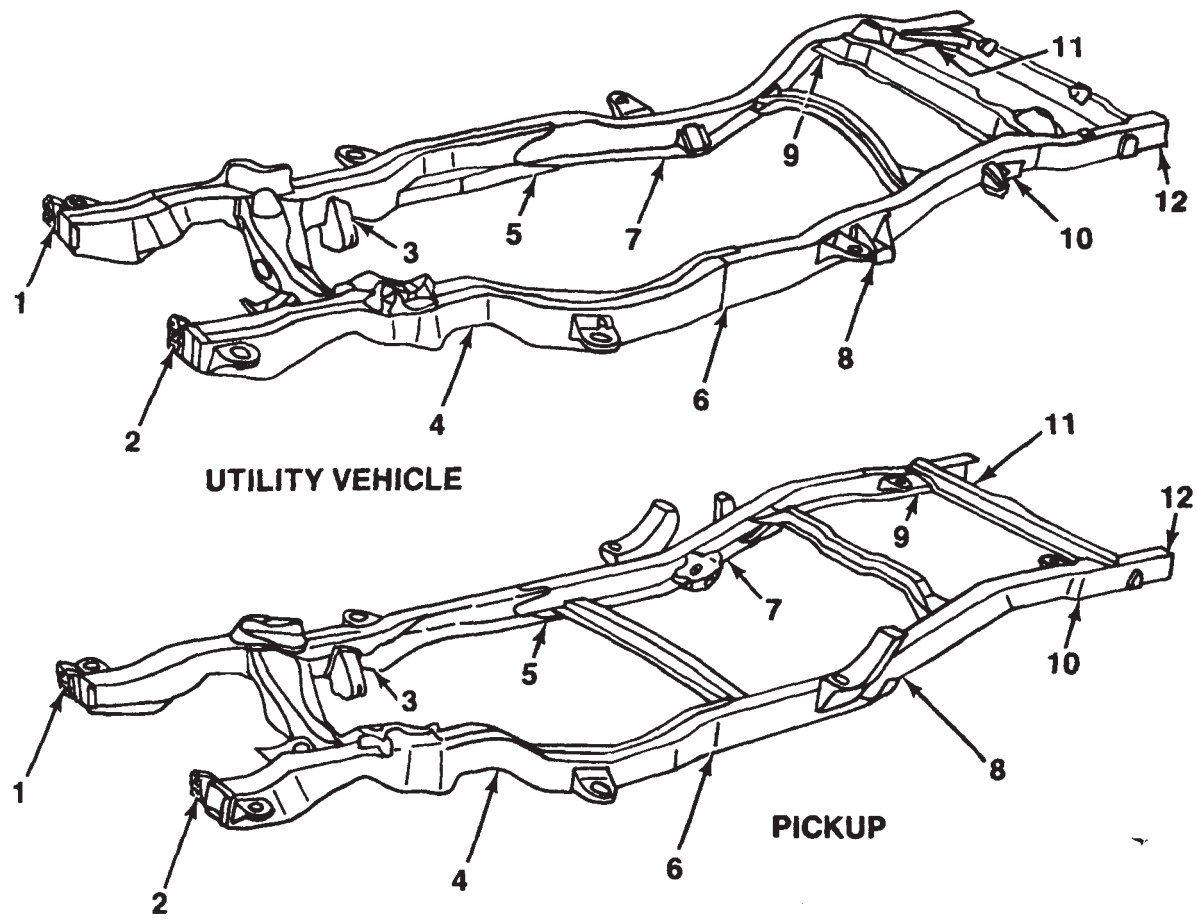

1 through 12. Frame Measurement Points

F6423

Figure 1—Frame (2-wheel drive)

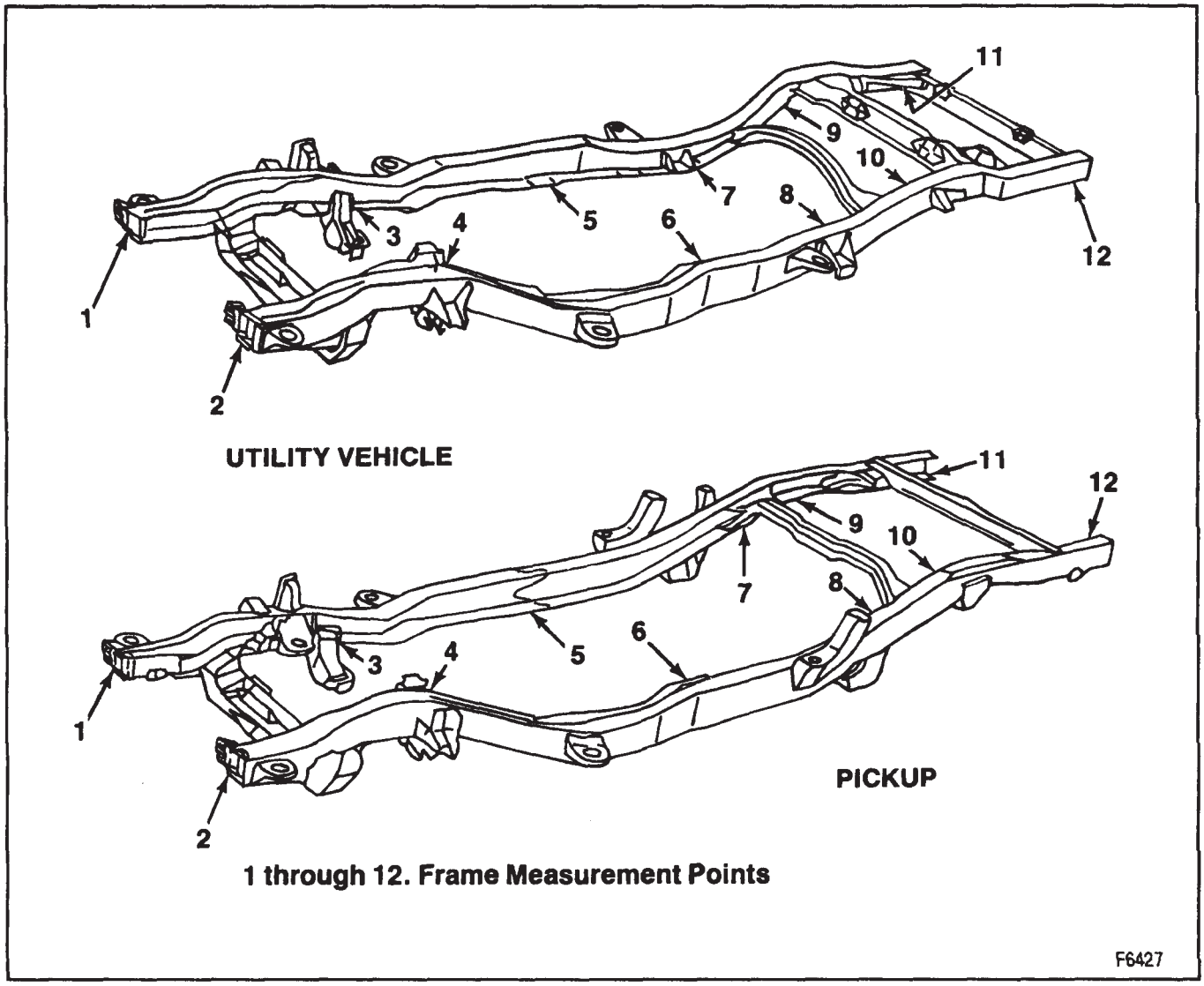

Figure 2—Frame (4-wheel drive)

should measure the same distance within 5 mm (3/16-inch), and should cross at the centerline. If the frame is within specifications, the frame within these points is properly aligned.

3. Repeat step 2 on other parts of diagonals until the entire frame has been checked. Example: Point 3 to point 10 and point 4 to point 9 or point 5 to point 12 and point 6 to point 11, etc.
4. Refer to "Straightening Frames" to repair any damage that is found.

STRAIGHTENING FRAMES

Frame straightening can be complicated and usually requires special equipment. It should be attempted by competent personnel only.

A complete analysis of the condition of the frame should be made before any steps are taken to straighten it. Analyzing the cause of failure will help determine the correct sequence of steps in the repair. (Refer to "Possible Causes" under "Diagnosis" and "Minimizing Frame Service" previously outlined in this section.) Corrective procedures should be set up to reverse the flow of the damaging forces. In many instances, to reverse the flow of forces, pressure must be applied from different directions at the same time.

Careful use of controlled heat is important. Too much or too little heat, or the improper application of heat, is a major source of trouble. Frame heating should be done with a large sized tip (multi-hole heating tip) and a neutral flame should be used (oxygen adjust opened just enough to remove the feathers or stringers from the blue center at tip of torch). Heat the area that will be stretched as frame is straightened. Heat the area AFTER SUFFICIENT PRESSURE HAS BEEN EXERTED to cause a slight checking or silvery cracks to appear on the surface of the metal. Gradually increase the pressure while heating. Do not heat beyond 606°C (1200°F). A red glow indicates that the material is overheated. Overheating will cause distortion and stretching, as well as a change in the characteristics of the metal.

REPAIRING CRACKS

Two common types of cracks are shown in figure 4. The straight crack will normally start from the edge of a flange. It will go across the flange and through the web

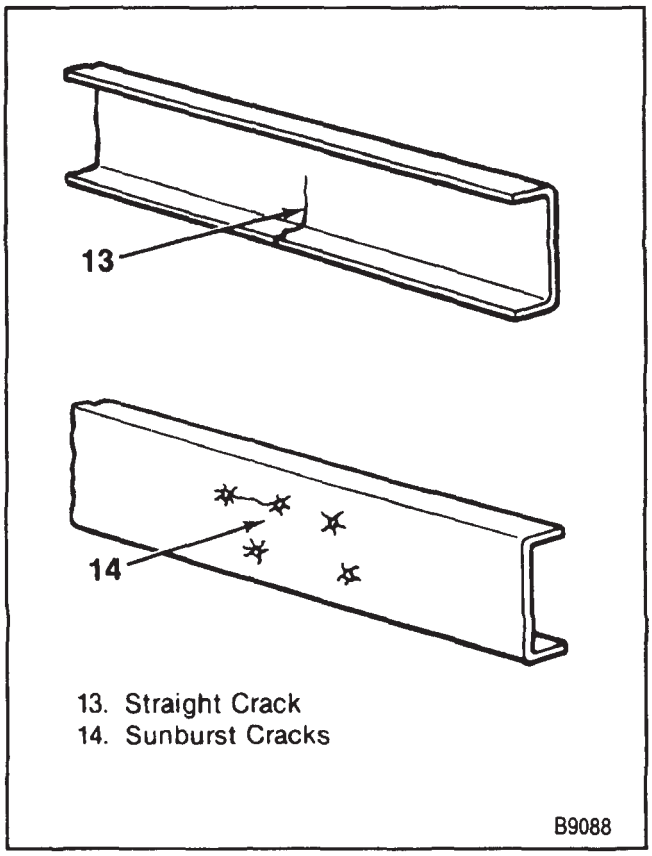

Figure 3—Types of Frame Cracks

section of a rail. Finally, it will continue through the other flange. This type of crack may result from high concentrations of stress in small areas of the frame, excessive bending movement, and torsional loading. (Refer to "Minimizing Frame Service", previously outlined in this section).

Sunburst crack(s) will radiate out from a hole in the web section of a rail or crossmember. They are caused by high loads being applied at a mounting bracket or crossmember which is not securely or properly attached to the rail.

If cracks occur to both the rail and reinforcement at a particular area of the frame, they must be repaired separately. The flanges must react independently to prevent localized stress concentration. Use a copper spacer between the flanges of cracked base rail flanges and reinforcement flanges.

Crossmember mounting flange cracks may be repaired in the same manner as side rail cracks. However, weld bead should be built up to provide a good smooth radius. If a crossmember is greatly damaged it should be replaced.

It may be necessary to align the frame and level the rails before repairing the frame.

1. Remove any equipment that will interfere with access to the crack.
2. Locate the extreme end of the crack and drill a 6 mm (0.25-inch) hole.
3. "V" grind the entire length of the crack from the starting point to the 6 mm (0.25-inch) hole at the extreme end.
4. The bottom of the crack should be opened up 2 mm (1/16-inch) to allow good penetration of the weld. (A hack-saw blade may be used for this.)
5. Weld with proper electrode and proper welding techniques. Refer to "Welding" outlined later in this section for tips on welding.
6. Grind the weld smooth on both the inside and the outside of the rail or crossmember. Be extremely careful to eliminate weld build-up or notches on the edge of the flange.

WELDING

Improper welding techniques are the cause of many weld and/or frame failures. The following information points out potential areas of difficulty and provides some general guidelines for successful frame welding.

Most weld failures occur at the end of the weld in areas of the frame that are under high stress. By eliminating the end of a weld, failures can be reduced; this can be done by making a hole or slot in the part to be attached and then using a fillet weld around a slot or plug weld. do not leave a notch at the end of a weld.

Over-welding can be harmful, especially if it is in an area of the frame that receives high concentrations of stress.

Small cracks in a crossmember may be welded. Refer to "Repairing Cracks" previously outlined in this section.

When welding:

1. The frame is covered with a protective wax coating. Use a wire brush to remove any concentration of wax before welding. When finished, recoat the area with new wax.
2. Do not use oxyacetylene welding equipment.
3. Whenever possible, use smaller diameter electrodes and make several passes; this is preferred to using a large diameter electrode and making fewer passes.
4. Do not use more heat than is necessary to give good penetration.
5. Make sure the weld is free from craters and undercuts.
6. Make sure scale is removed from each successive pass.
7. If repairing a crack, grind the surface of the weld flush with the parent material.
8. When mounting accessories, do not weld across the flanges.
9. When mounting accessories, do not weld within 19 mm (3/4-inch) of a flange.
10. Do not weld up to the edge of a part being welded to a frame. Leave 6 mm (0.25 inch) between the end of the weld and the edge of the part.
11. Do not weld cast brackets to the frame.
12. Do not weld the flanges of cracked reinforcements and base rails together.
13. Do not attach the ground cable to the engine. Connect the welding machine ground cables as close to the working area as possible.
14. Do not disconnect the vehicle battery.
15. Do not get the welding cables near the vehicle wiring. Avoid direct contact between the welding cables and any part of the vehicle.

ON-VEHICLE SERVICE

FRONT BUMPER REPLACEMENT

Remove or Disconnect (Figures 4 and 5)

1. Bumper (1) to air dam bolts (8).
   - Support the air dam in the center.
2. Brace (4) to bumper nut (2) and bolt (3).
3. Parking lamp connectors.
4. Bumper (1) to frame nuts (5) and bolts (6).
5. Bumper from the vehicle.

Install or Connect (Figures 4 and 5)

NOTICE: For steps 2, 4, and, 5 see "NOTICE" on page 2A-1.

1. Bumper (1) to the vehicle.
2. Bumper to frame bolts (6) and nuts (5).
3. Parking lamp connectors.
4. Brace (4) to bumper nuts (2) and bolts (3).
5. Bumper to air dam bolts (8).

Tighten

- Nuts to 27 N·m (20 ft. lbs.).
- Bolts to 50 N·m (37 ft. lbs.).

FRONT BUMPER FILLER REPLACEMENT

Remove or Disconnect (Figure 7)

1. Front bumper.
2. Headlamp bezels.
3. Bolts (12).
4. Front bumper filler (11).

Install or Connect (Figure 7)

NOTICE: For steps 2, and 4, see "NOTICE" on page 2A-1.

1. Front bumper filler (11).
2. Bolts (12).
3. Headlamp bezels.
4. Front bumper.

Tighten

- Bolt (12) to 10 N·m (84 in. lbs.).

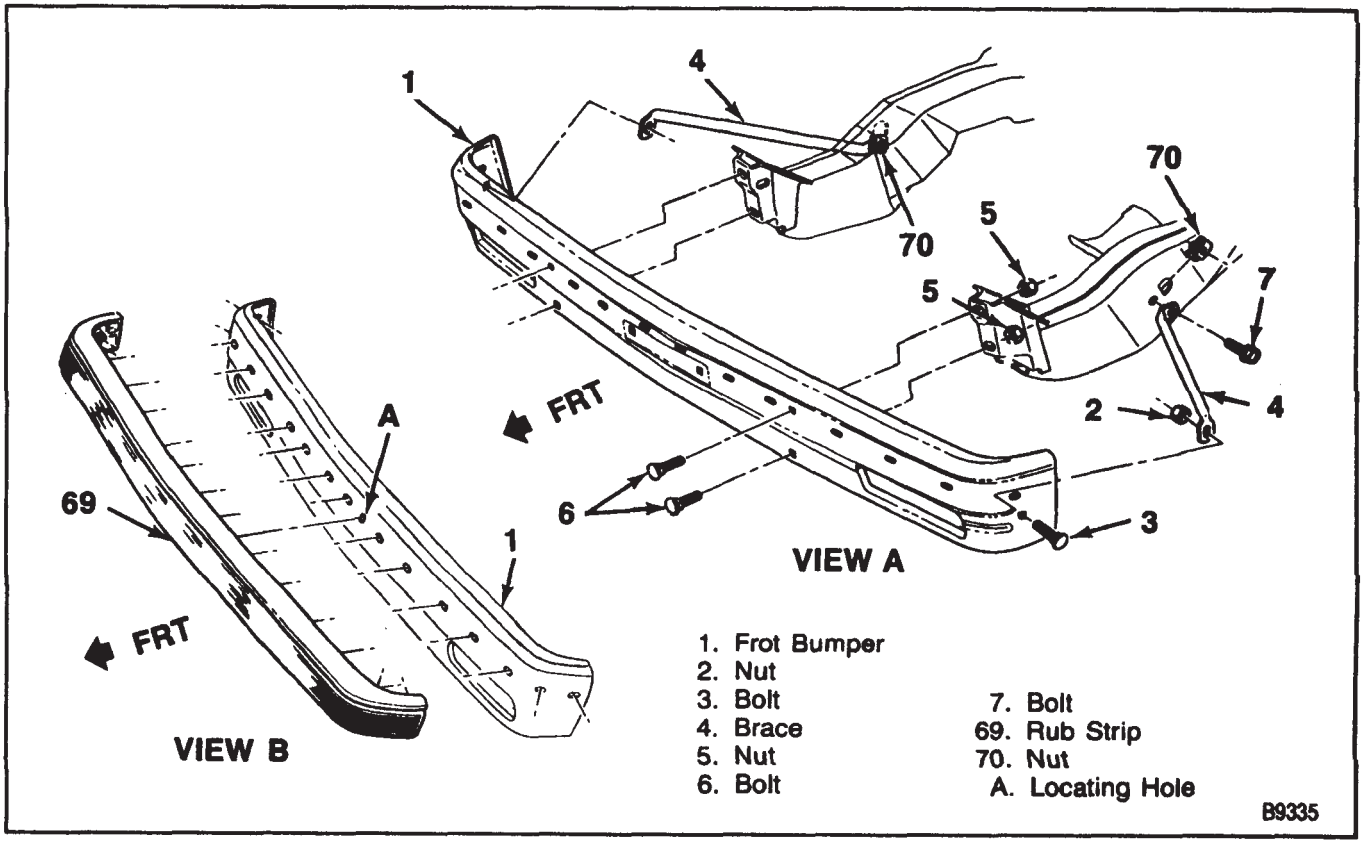

Figure 4—Front Bumper Components

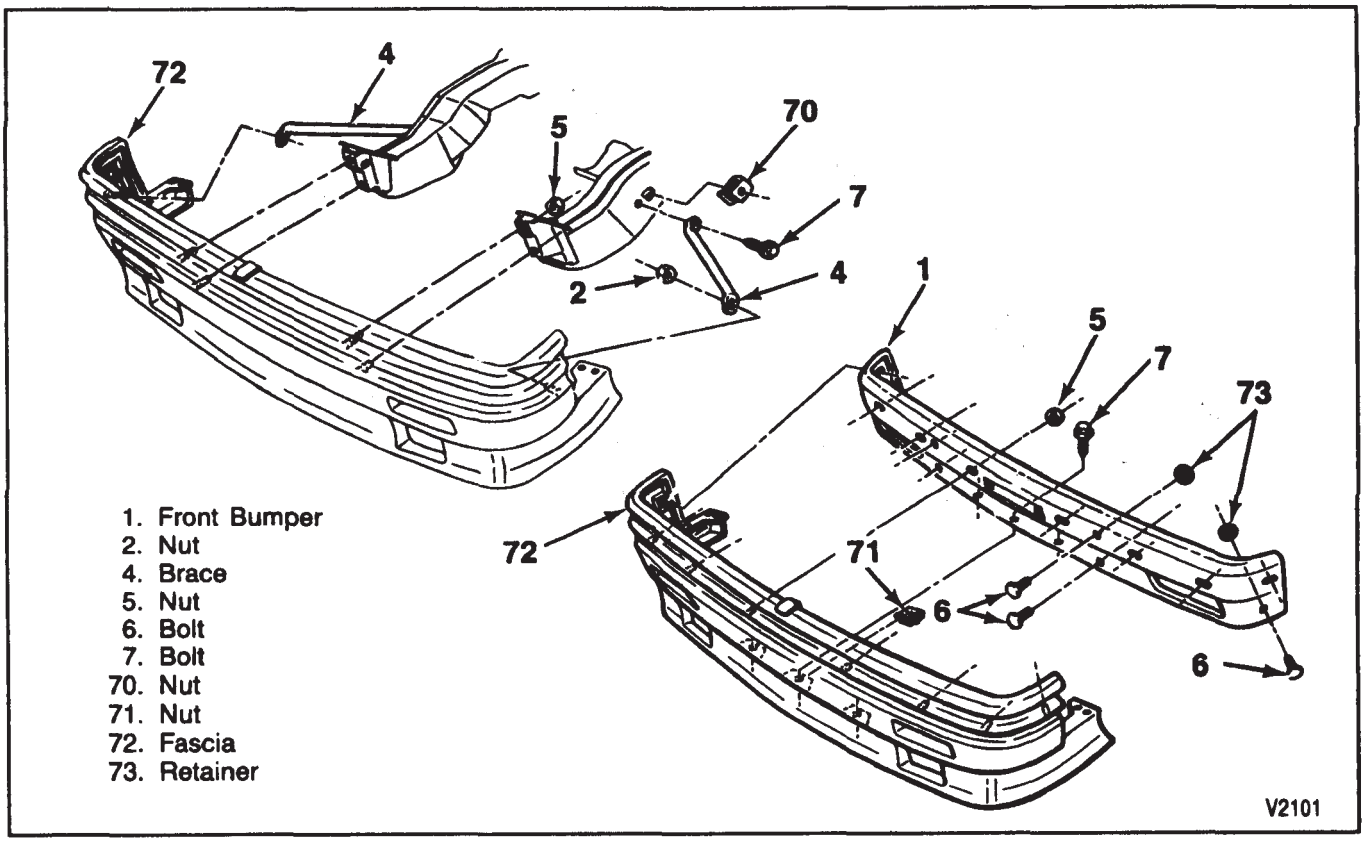

Figure 5—Front Bumper Components

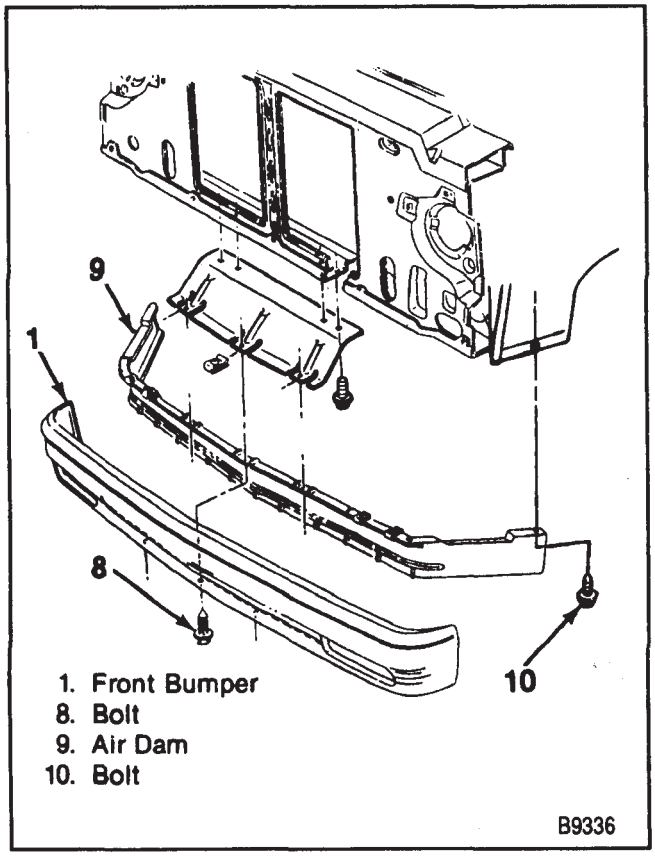

Figure 6—Air Dam Location

REAR STEP-BUMPER REPLACEMENT

Remove or Disconnect (Figure 8)

1. Brace (18) to bumper nuts (15), washers (16) and bolts (17).
2. Bumper (14) from the vehicle.
3. Brace (18) to frame nuts (19), washers (20) and bolts (21).
4. Braces (18) from the frame.

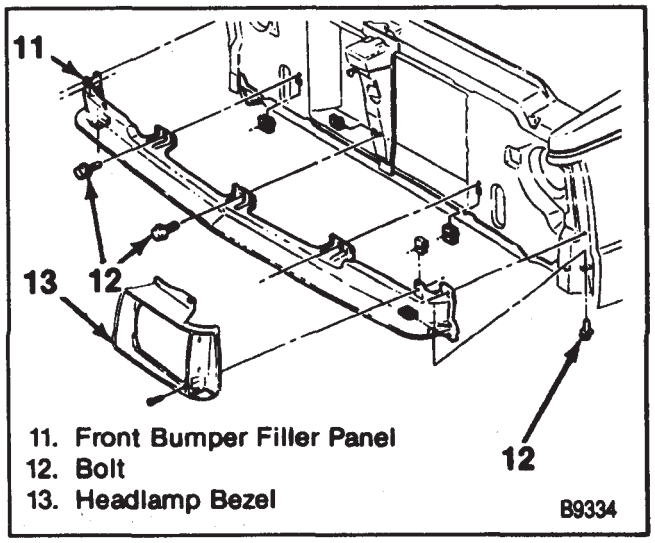

Figure 7—Front Bumper Filler

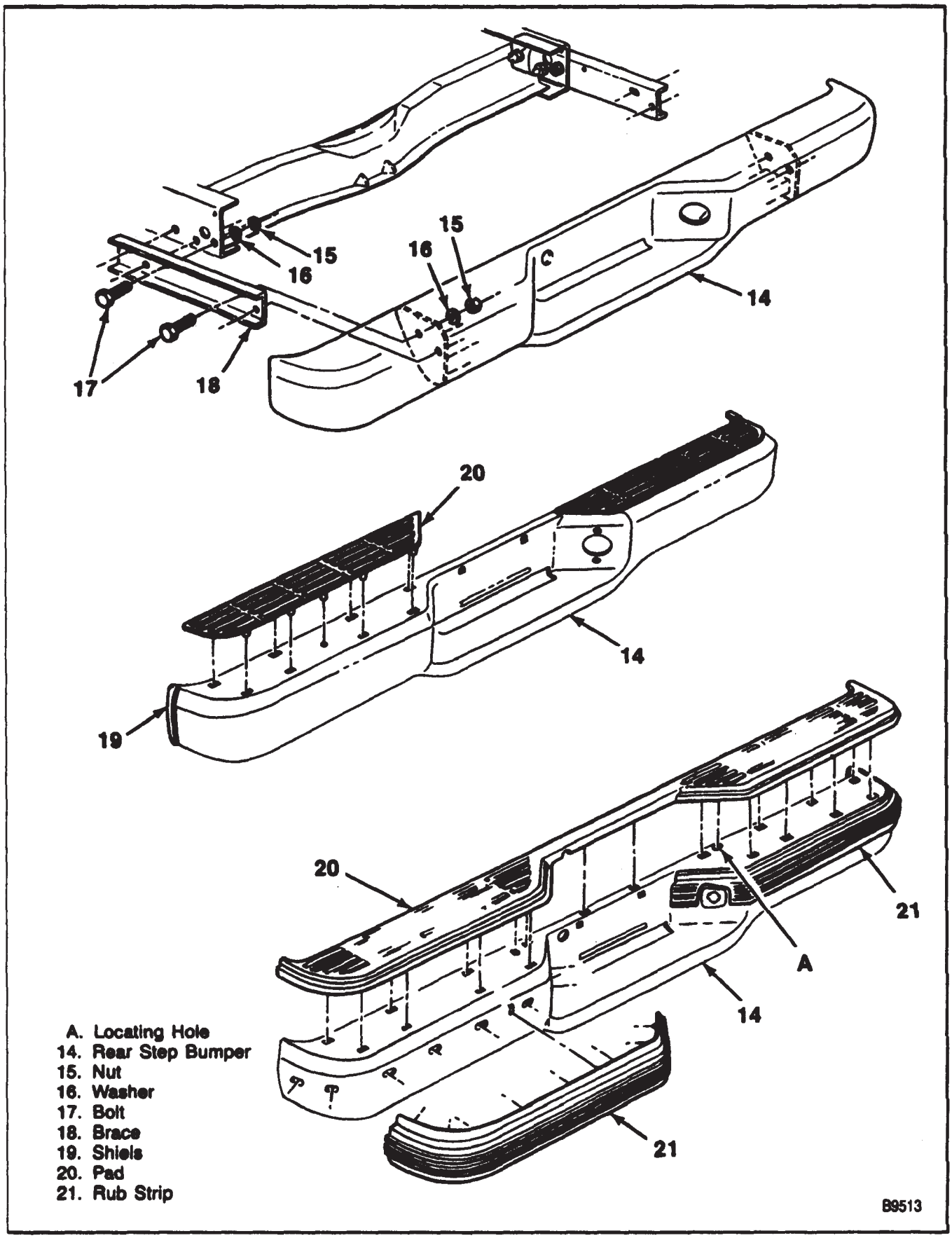

Figure 8—Rear Step Bumper Components

Install or Connect (Figure 8)

NOTICE: For steps 2, and 4, see "NOTICE" on page 2A-1.

1. Braces (18) to the frame.
2. Brace (18) to frame bolts (21), washers (20) and nuts (19).
3. Bumper (14) to the vehicle.
4. Brace (18) to bumper bolts (17), washers (16) and nuts (15).

Tighten

- Bolts to 105 N·m (77 ft. lbs.).

REAR BUMPER REPLACEMENT

Remove or Disconnect (Figure 8 through 10)

1. Bracket (34) to bumper nuts (24) and bolts (26).
2. Brace (27) to bumper nuts (23) and bolts (25).
3. Bumper (22) from the vehicle.
4. Brace (27) to frame nuts (28), washers (29) and bolts (30).
5. Brace (27).
6. Bracket (34) to frame nuts (31), washers (32) and bolts (33).
7. Bracket (34).

Install or Connect (Figure 8 through 10)

NOTICE: For steps 2, 4, 6, and, 7 see "NOTICE" on page 2A-1.

1. Bracket (34) to the frame.
2. Bracket (34) to frame bolts (33), washers (32) and nuts (31).
3. Brace (27) to the frame.
4. Brace (27) to frame bolts (30), washers (29) and nuts (28).
5. Bumper (22) to the vehicle.
6. Brace (27) to bumper nuts (23) and bolts (25).
7. Bracket (34) to bumper nuts (24) and bolts (36).

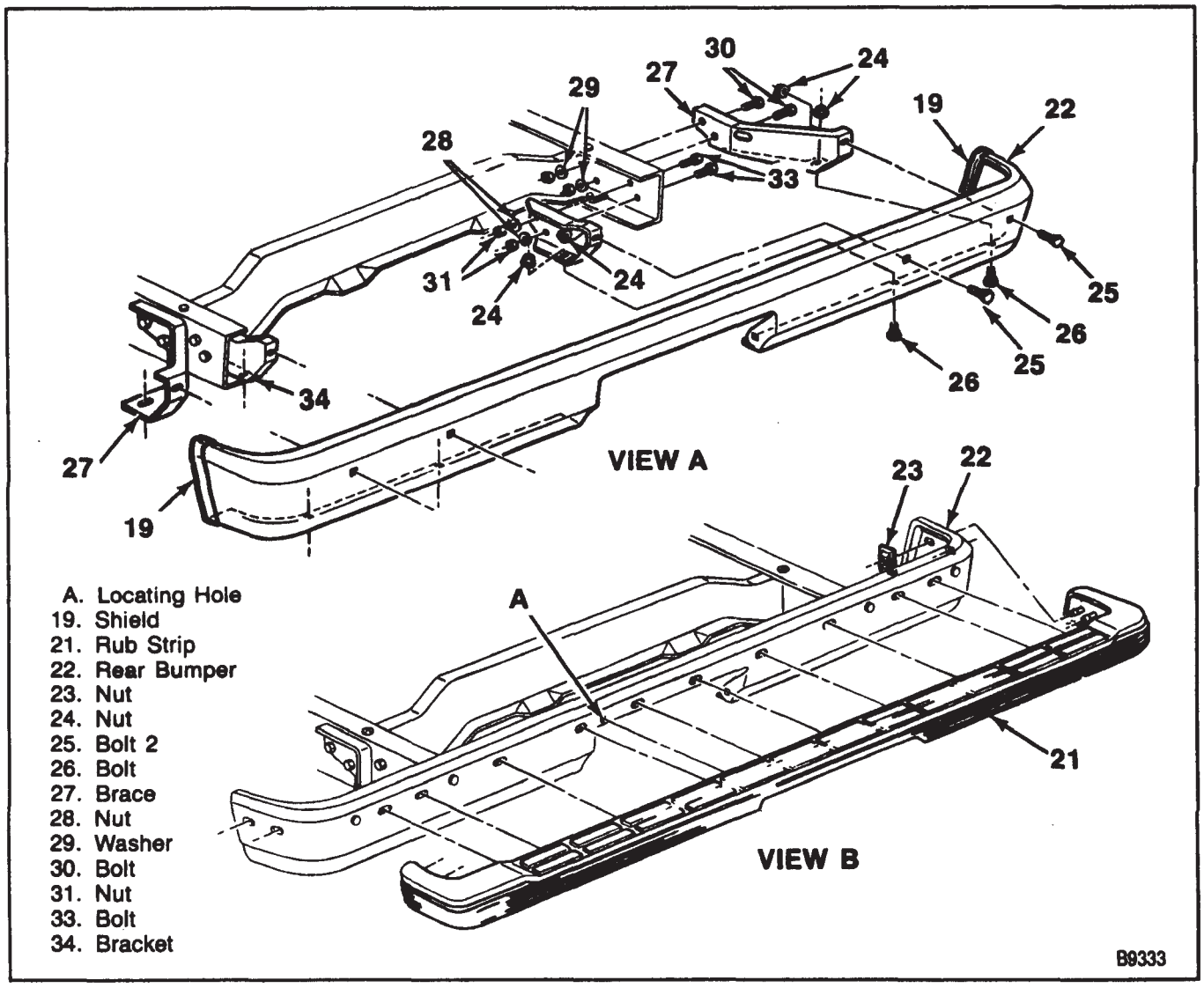

Figure 9—Rear Bumper Components

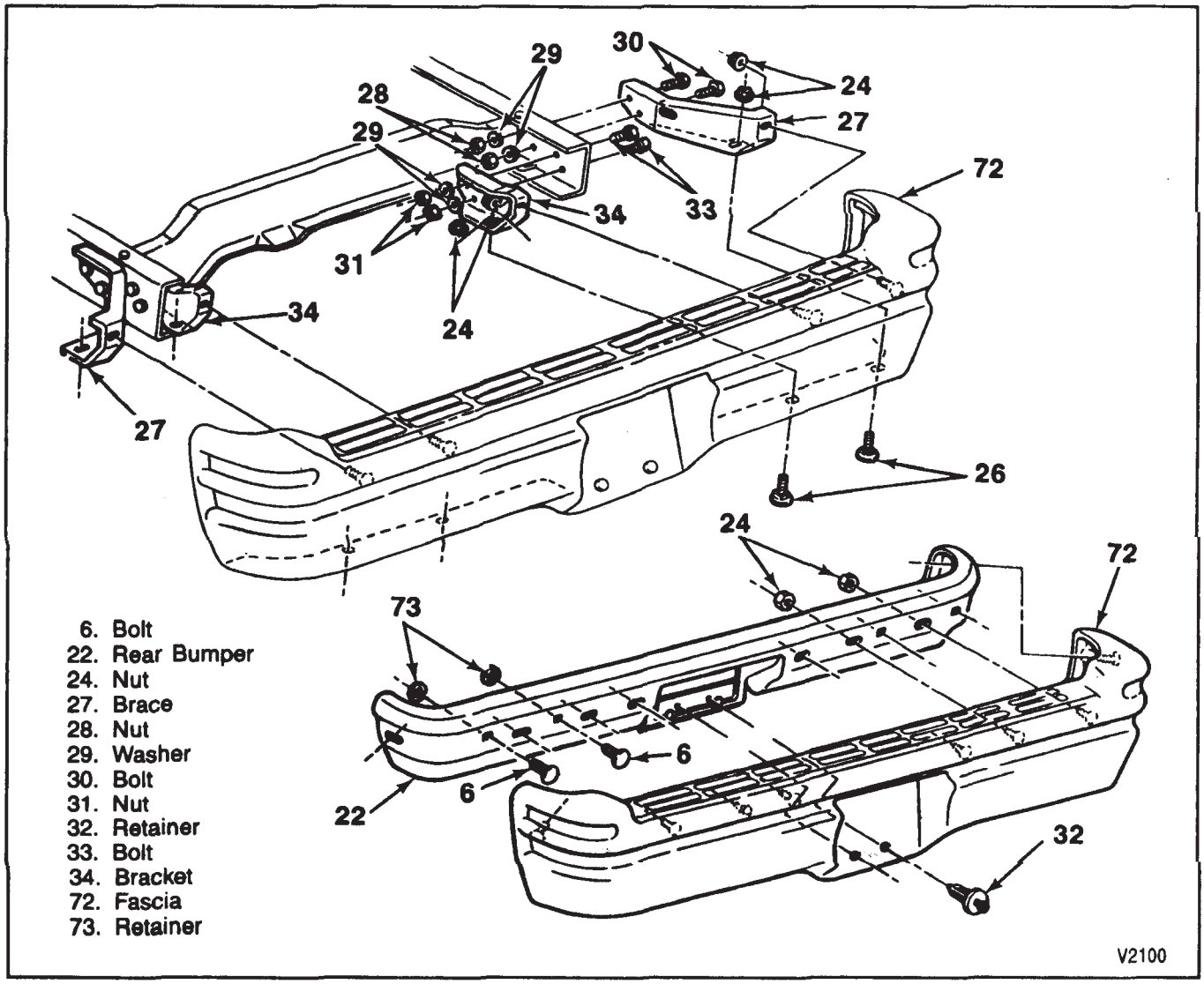

Figure 10—Rear Bumper Components

Tighten

- Bolts (30, 33) and nuts (28, 31) to 95 N·m (70 ft. lbs.).
- Nuts (23, 24) to 27 N·m (20 ft. lbs.).

REAR BUMPER FILLER REPLACEMENT

Remove or Disconnect (Figure 11)

1. Filler panel bolts (35, 39).
2. Filler panel (36).

Install or Connect (Figure 11)

1. Filler panel (36).

NOTICE: See "NOTICE" on page 2A-1.

2. Filler panel bolts (35, 39).

Tighten

- Bolts (35) to 10 N·m (84 in. lbs.).
- Bolts (39) to 4.5 N·m (36 in. lbs.).

LICENSE PLATE BRACKET REPLACEMENT

Remove or Disconnect (Figure 12)

1. Bumper (22) to license plate bracket nuts (37), and bolts (38).
2. Bumper filler (36) to license plate bracket bolt (39).
3. License plate bracket (40).

Install or Connect (Figure 12)

NOTICE: For steps 2, and, 3 see "NOTICE" on page 2A-1.

1. License plate bracket (40).

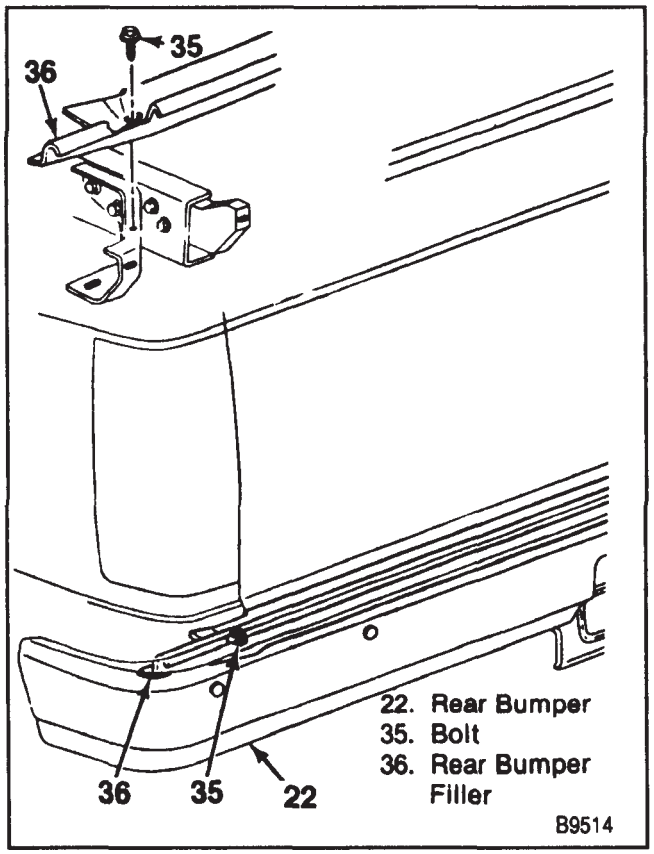

Figure 11—Rear Bumper Filler

2. Bumper filler (36) to license plate bracket bolt (39).
3. Bumper (22) to license plate bracket bolts (38) and nuts (37).

Tighten

- Nut (37) to 27 N·m (20 ft. lbs.).
- Bolts (39) to 4.5 N·m (36 in. lbs.).

TRAILER HITCHES

DEAD WEIGHT TRAILER HITCH

Remove or Disconnect (Figure 13)

1. Bracket assembly nuts, washers, and bolts from the frame.
2. Support nuts and bolts from the bumper.
3. Hitch assembly.
4. Chain bracket nut and bolt.
5. Chain bracket.
6. Support.
7. Bar assembly bolt and nut from the bracket.
   - Bar assembly.

Install or Connect (Figure 13)

NOTICE: For steps 1 through 4 see "NOTICE" on page 2A-1.

1. Bracket assembly to frame with bolts, washers and nuts.

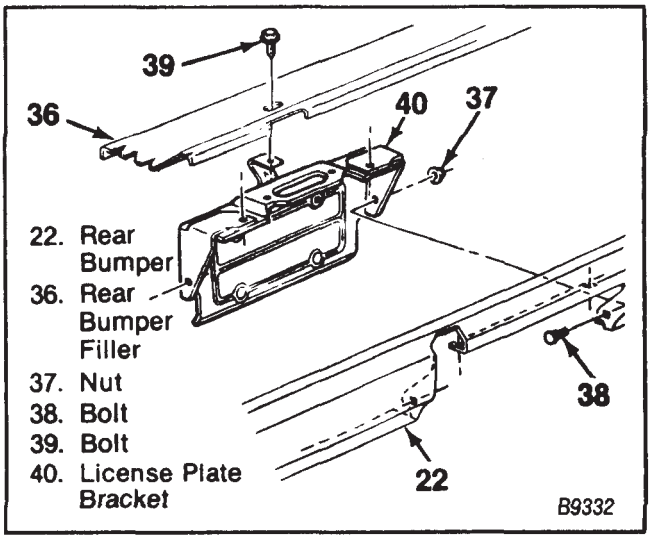

Figure 12—License Plate Bracket Components

Tighten

- Bolts to 70 N·m (50 ft. lbs.).

2. Bar assembly to support.
   - Place the bolt through the bar assembly, support, and chain bracket. Install the nut loosely.
3. Support assembly bolts through the support *and the bumper.*
   - Install the nut loosely.
4. Bar assembly bolt through the bar and bracket assembly.
   - Install the nut loosely.

Tighten

- Bar to bracket nut to 70 N·m (50 ft. lbs.).
- Bar to support nut to 70 N·m (50 ft. lbs.).
- Support to bumper nuts to 45 N·m (33 ft. lbs.).

UTILITY VEHICLE PLATFORM HITCH

Remove or Disconnect (Figure 14)

1. Rear bumper.
2. Bolts (30) and nuts (28) from the frame rails.
3. Braces (27), hitch (55) and brackets (34) from the vehicle.

Install or Connect (Figure 14)

NOTICE: See "NOTICE" on page 2A-1.

1. Brackets (34), hitch (55) and braces (27) to the frame rails with bolts and nuts).

Tighten

- Nuts to 140 N·m (100 ft. lbs.).

2. Bumper to the vehicle.

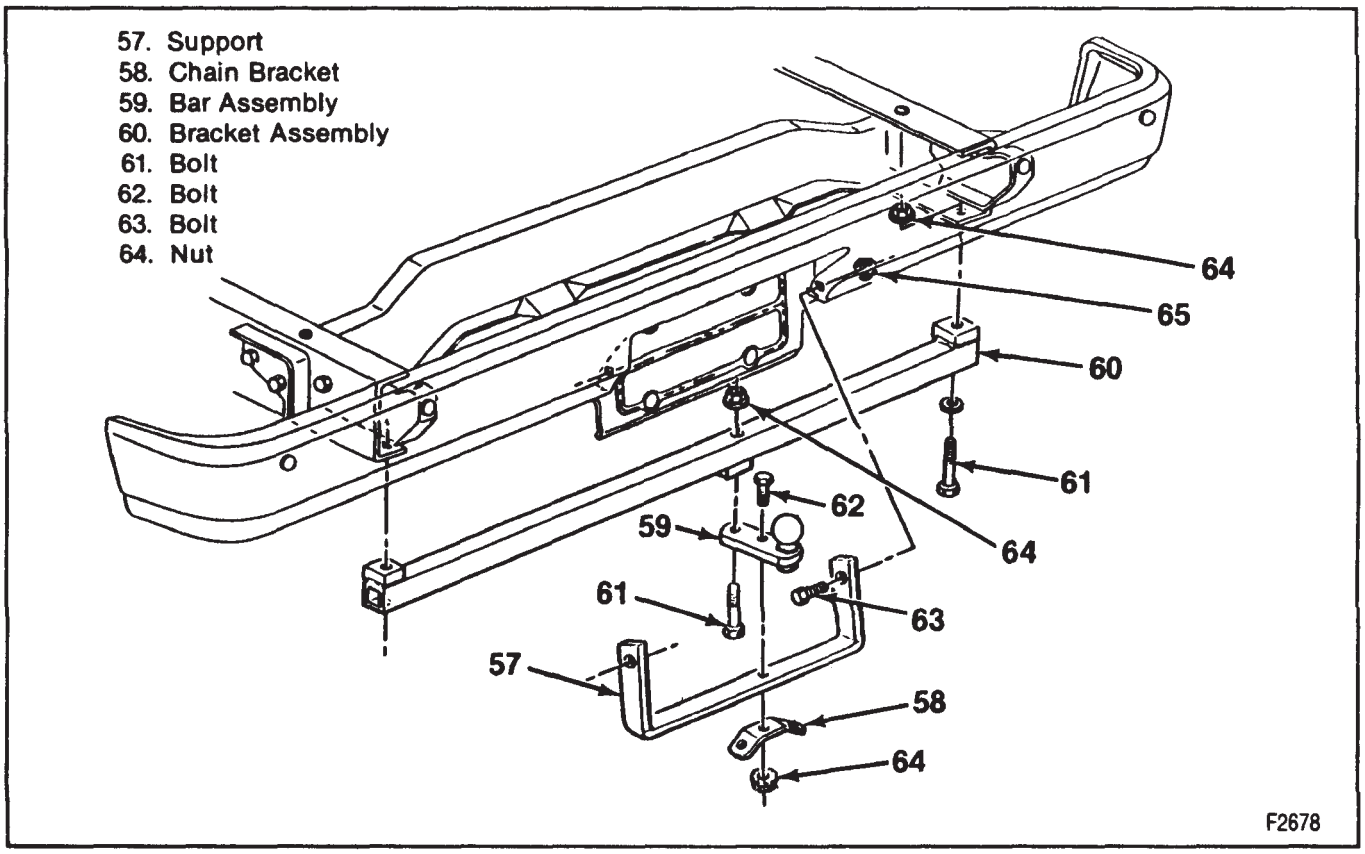

Figure 13—Dead Weight Trailer Hitch Components

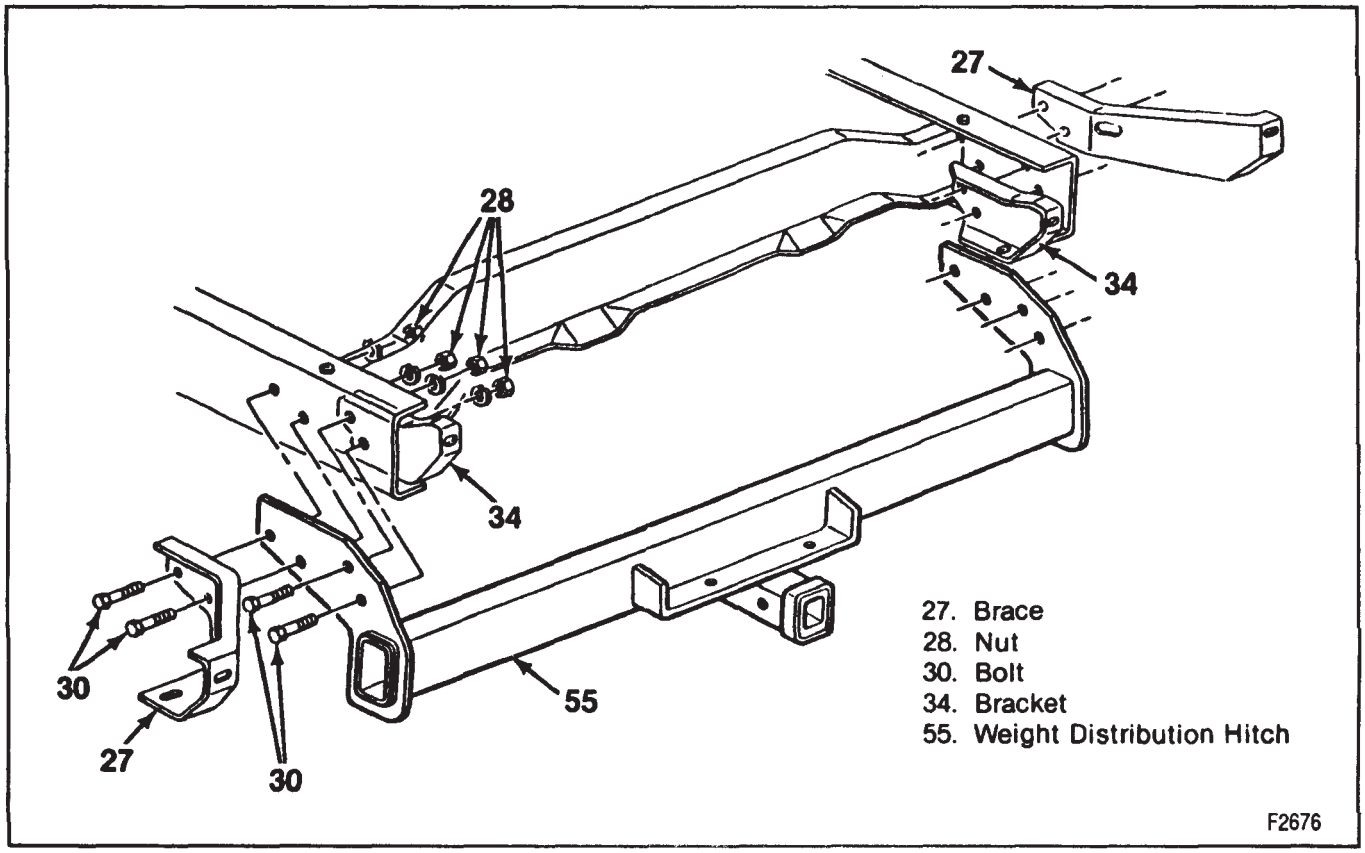

Figure 14—Weight Distribution Hitch Components—Utility Vehicle

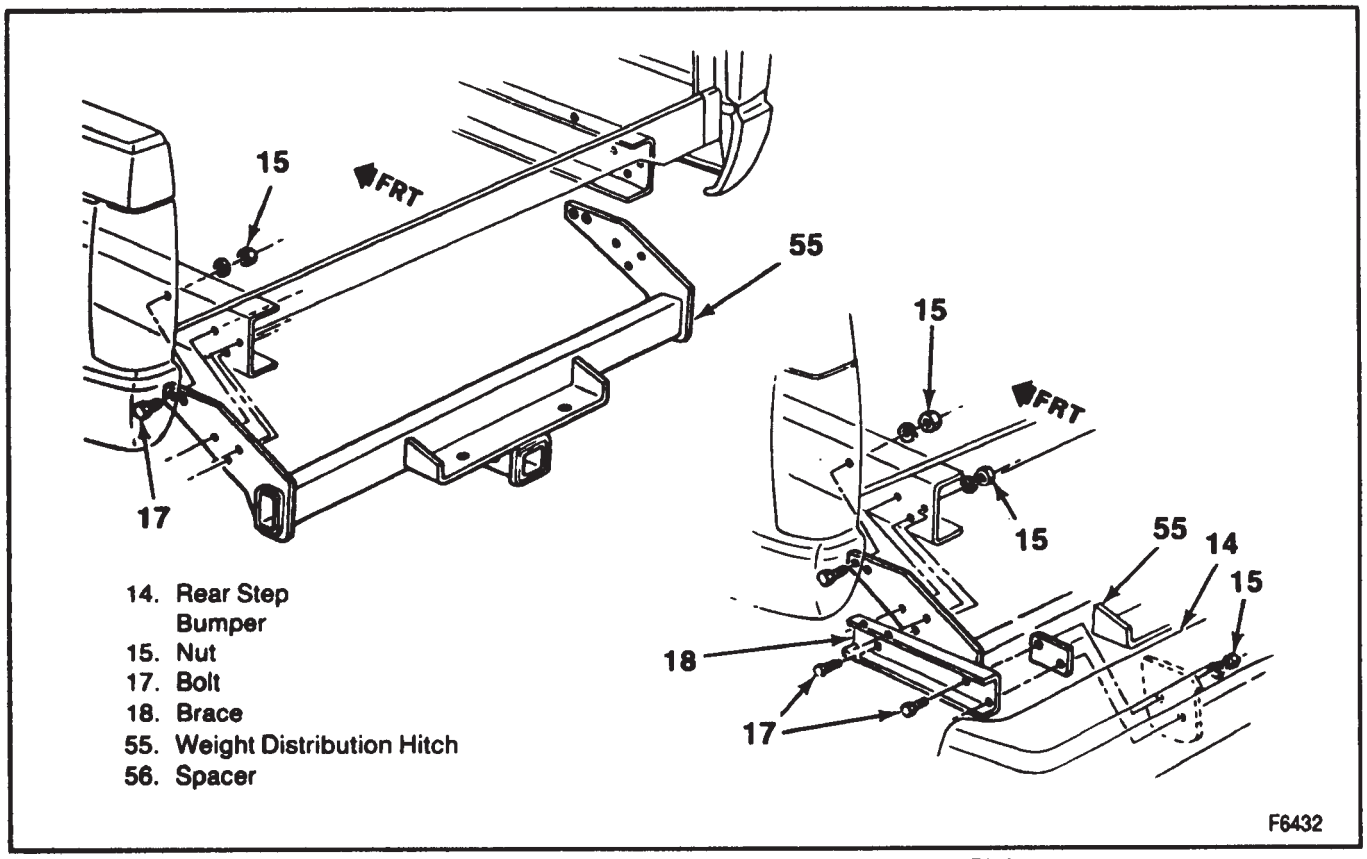

Figure 15—Weight Distribution Hitch Components—Pickup

PICKUP PLATFORM HITCH

Remove or Disconnect (Figure 15)

1. Bumper.
2. Hitch (55), bolts, washers and nuts from the frame rails or the extension.

Install or Connect (Figure 14)

NOTICE: See "NOTICE" on page 2A-1.

1. Hitch (55) to the frame rails or to the extension with bolts (17), washers and nuts (15).

Tighten

- Nuts to 110 N·m (80 ft. lbs.).

2. Bumper to the vehicle.

TOW HOOKS

Remove or Disconnect (Figure 16)

1. Bolts from the tow hooks.
2. Tow hooks (67) and plates (65) from the frame.

Install or Connect (Figure 16)

NOTICE: See "NOTICE" on page 2A-1.

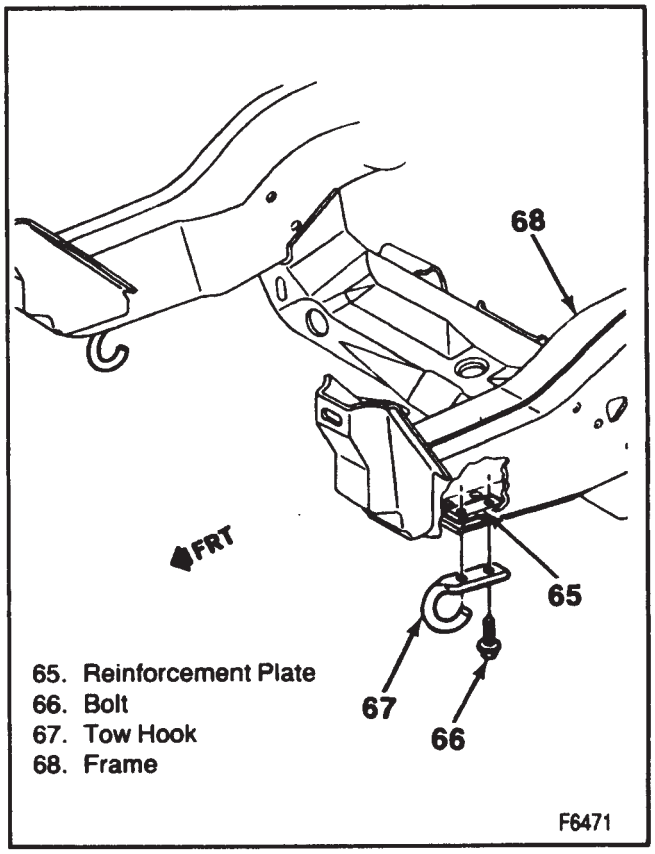

Figure 16—Tow Hooks

1. Tow hooks (67) and plates (65) to the frame.

Tighten

- Bolts to 50 N·m (37 ft. lbs.).

SPECIFICATIONS

	N·m	Ft. Lbs.
Front Bumper Brace Bolt (7)	50	37
Front Bumper Nuts (2, 5)	27	20
Front Bumper Filler Panel Bolt (12)	10	7
Step Up Rear Bumper Nut (19)	95	70
Rear Bumper Bolts (30, 33)	95	70
Rear Bumper Nuts (28, 31)	95	70
Rear Bumper Nuts (23, 24)	27	20
Rear Bumper Filter Bolt (35)	10	7
License Plate Bracket Bolt (39)	4.5	3
License Plate Bracket Nut (37)	27	20
Body Mount Bolt (46)	75	55
Body Mount Nut (42)	47	35
Bracket Assembly to Frame Bolts (61)	63	46
Bar Assembly to Bracket Nut (61)	63	46
Bar Assembly to Support Nut (62)	63	46
Support to Bumper Nuts (65)	40	30

T2003

SECTION 2B

SHEET METAL

NOTICE: When fasteners are removed, always reinstall them at the same location from which they were removed. If a fastener needs to be replaced, use the correct part number fastener for that application. If the correct part number fastener is not available, a fastener of equal size and strength (or stronger) may be used. Fasteners that are not reused, and those requiring thread locking compound will be called out. The correct torque value must be used when installing retainers that require it. If the above conditions are not followed, parts or system damage could result.

CONTENTS

SUBJECT	PAGE
On-Vehicle Service	2B- 1
Hood Replacement	2B- 1
Hood Hinge Replacement	2B- 3
Hood Primary Latch Catch Assembly Replacement	2B- 4
Hood Primary Latch Assembly Replacement	2B- 4
Hood Latch Adjustment	2B- 5
Front Fender Replacement—Right	2B- 5
Front Fender Replacement—Left	2B- 5
Front Wheelhouse Panel Replacement—Right	2B- 7
Front Wheelhouse Panel Replacement—Left	2B- 8
Cowl Vent Grille Replacement	2B- 8
Grille Replacement	2B- 9
Center Support Replacement	2B- 9
Radiator Support Replacement	2B-10
Front Wheelhouse Molding Replacement	2B-11
Front Fender Emblem Replacement	2B-11
Adhesive—Retained Moldings and Emblem Replacement	2B-11
Decal Replacement	2B-11
Radiator Grille Emblem Replacement	2B-12
Cab Mount Replacement	2B-12
Anticorrosion Treatment	2B-13
Sheet Metal Repair	2B-16
Dinging and Finishing	2B-16
Sheet Metal Adjustments	2B-16
Painting Sheet Metal	2B-16
Anti-Chip Coating Replacement	2B-18
Paint Codes	2B-18
Specifications	2B-19
Special Tools	2B-19

ON-VEHICLE SERVICE

HOOD REPLACEMENT

- Raise and support the hood (figures 1, 2, and 3).
- Install protective coverings over the fenders.

Remove or Disconnect (Figures 1 and 3)

1. Underhood lamp wire.
   - Mark the position of the hinge on the hood to aid in realignment.
   - Secure the rear edge of the hood.
2. Hinge to hood attaching bolts (44).
3. Hood assembly (3) from the hinges (35).

Install or Connect (Figures 1 and 3)

- Support the hood.

1. Hood assembly (3) to the hinges (35).

NOTICE: See "NOTICE on page 2B1 of this section.

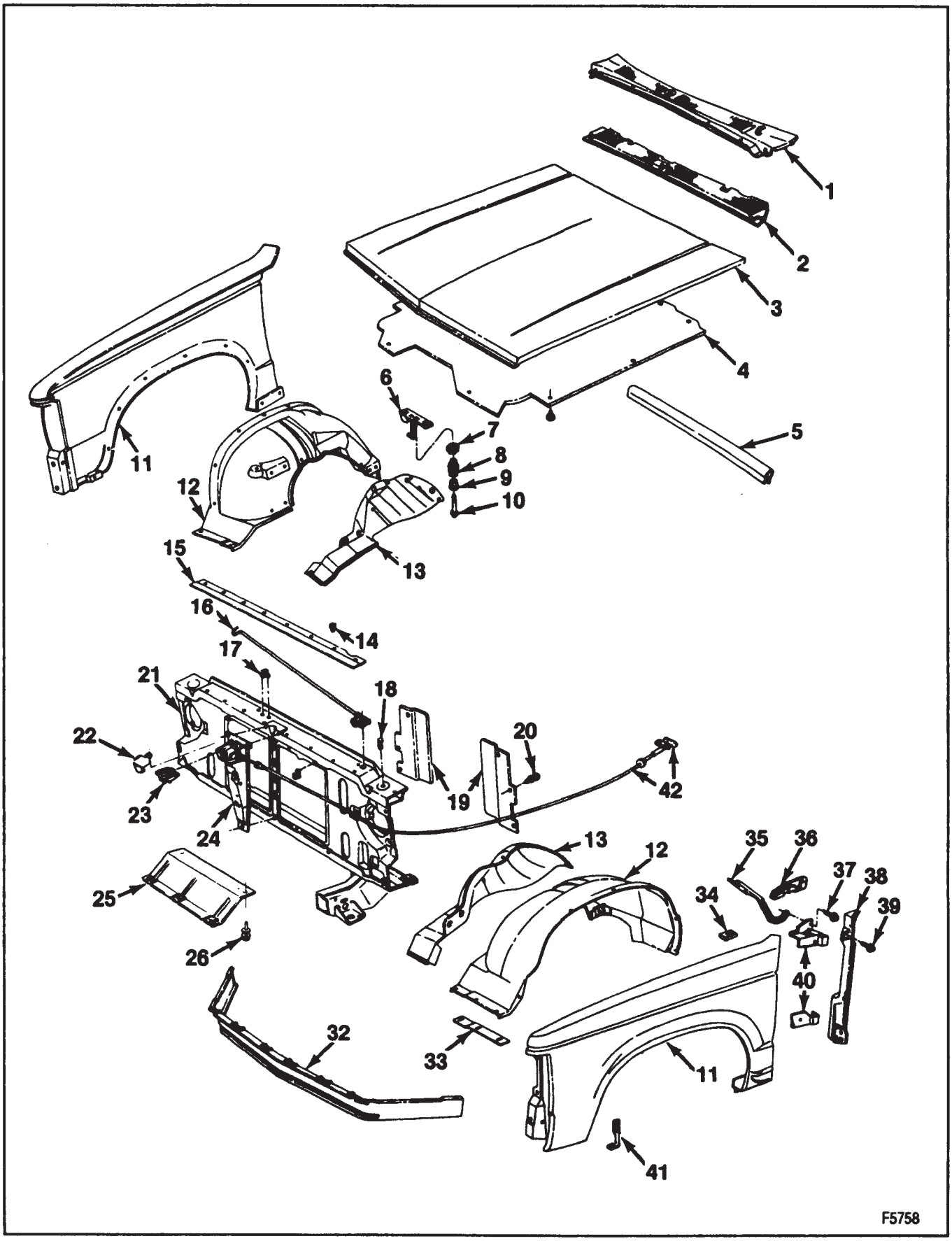

Figure 1—Front End Body Components

1. Cowl Vent Grille
2. Cowl Vent Grille Screen
3. Hood
4. Hood Insulator
5. Cowl Vent Grille Seal
6. Secondary Hood Latch
7. Nut
8. Hood Primary Latch Spring
9. Hood Primary Latch Retainer
10. Hood Primary Latch Bolt
11. Fender Assembly
12. Wheelhouse Panel
13. Wheelhouse Panel Shield
14. Hood Seal Retainer
15. Hood Front Seal
16. Hood Support Rod
17. Hood Support Rod Retainer
18. Hood Front Bumper
19. Radiator Support Baffle
20. Radiator Support Retainer
21. Radiator Support Assembly
22. Primary Latch Shield
23. Hood Primary Latch Catch Assembly
24. Center Sheet Metal Support
25. Radiator Support Lower Baffle
26. Retainer
32. Front Air Deflector
33. Wheelhouse Panel Reinforcement
34. Hood Hinge Seal
35. Hood Hinge
36. Hood Hinge Seal
37. Bolt
38. Cowl and Fender Shroud Seal
39. Bolt
40. Fender Reinforcement
41. Front Fender Reinforcement

F5759

Figure 2—Front End Body Components

2. Hinge to hood attaching bolts (44).

Tighten

- Bolts (44) to 25 N·m .(18 ft. lbs.).
- Align the hinges with the alignment marks on the hood.

3. Underhood lamp wire.
- Remove the protective coverings from the fenders.
- Lower the hood, and recheck the alignment.

HOOD HINGE REPLACEMENT

Remove or Disconnect (Figures 3 and 4)

- Raise and support the hood.

1. Cowl vent grille (1). Refer to "Cowl Vent Grille Replacement" in this section.
2. Hood hinge to hood bolts (44).
3. Hood hinge to fender nut (45) and bolt (44).
4. Hood hinge (35) from vehicle.

Install or Connect

1. Hood hinge (35) to vehicle.
- Apply lubriplate or equivalent to the hood hinge around the hinge to fender bolt hole.

2. Hood hinge to fender nut (45) and bolt (44).

NOTICE: See "NOTICE" on page 2B-1 of this section.

3. Hood hinge to hood bolts (44).

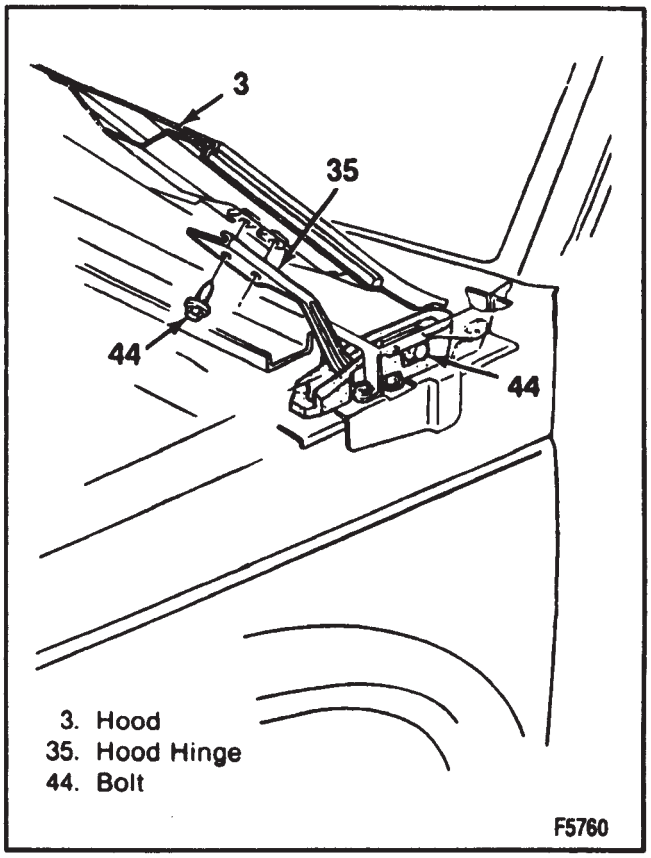

Figure 3—Hood Hinge

Tighten

- Bolts (44) to 25 N·m (18 ft. lbs.)

4. Cowl vent grille (1). Refer to "Cowl Vent Grille Replacement" in this section.

HOOD PRIMARY LATCH CATCH ASSEMBLY REPLACEMENT

Remove or Disconnect (Figures 5 and 6)

- Raise and support the hood.

1. Cable (42) from the catch assembly (23).
2. Shield (22) to catch assembly bolts (25).
3. Catch assembly to center support bolt (25).
4. Catch assembly (23).
   - Slide the catch assembly from the center support.

Install or Connect

NOTICE: For steps 2 and 3 refer to "Notice" on page 2B-1 of this section.

1. Catch assembly (23) to the center support (24).
   - Slide the catch assembly into the support.
2. Catch assembly (23) to center support bolt (25).

Tighten

- Bolt to 10 N·m (90 in. lbs.).

3. Shield to latch bolts (25).

Tighten

- Bolts to 10 N·m (90 in. lbs.).

4. Cable (42) to the latch assembly (23).

- Lower the hood.

HOOD PRIMARY LATCH ASSEMBLY REPLACEMENT

- Raise and support the hood.

Remove or Disconnect (Figure 7)

1. Latch assembly to hood bolts (26).

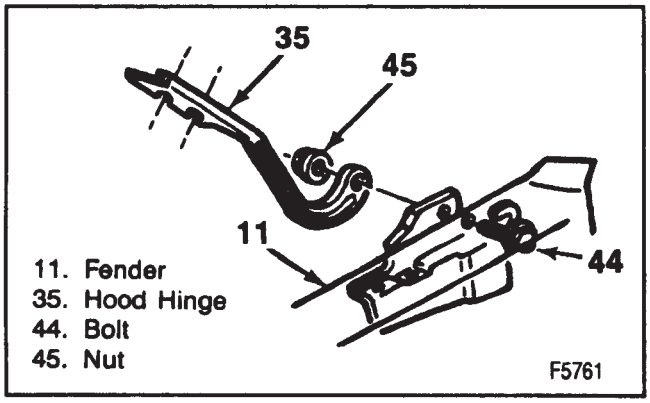

Figure 4—Hood Hinge Removed

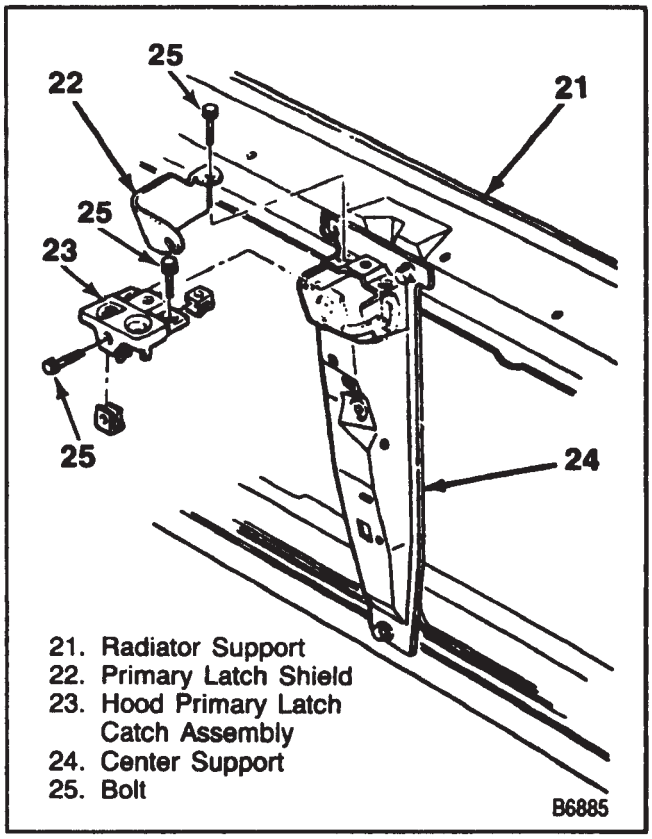

Figure 5—Hood Primary Latch Components

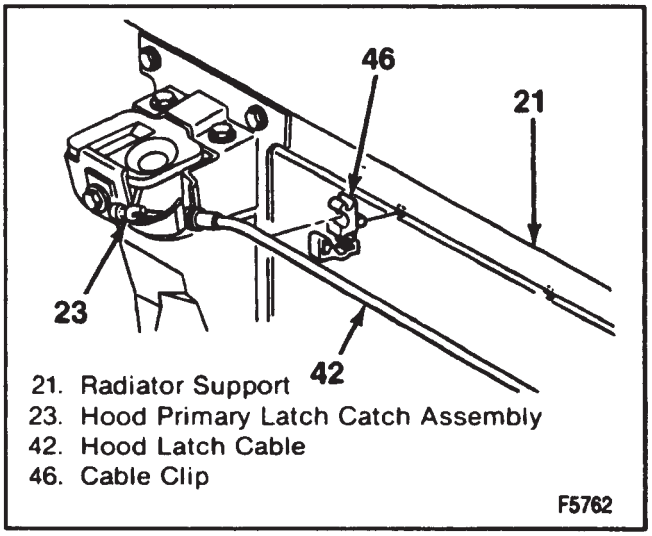

Figure 6—Hood Latch Cable

2. Latch assembly (6) from the hood (3).

Install or Connect

1. Latch assembly (6) to the hood (3).

NOTICE: Refer to "Notice" on page 2B-1 of this section.

2. Latch assembly to hood bolts (26).

Tighten

- Bolts (26) to 27 N·m (20 ft. lbs.).

HOOD LATCH ADJUSTMENT

Inspect (Figures 5 and 7)

- Hood latch.
  - Release the hood primary latch to check pop-up spring operation.
  - Attempt to raise the hood while the hood is in the pop-up position. The latch should engage and prevent the hood from being raised.

Adjust

- Hood latch forward or backward until the nubbin enters the center of the guide.

NOTICE: Bending the nubbin to accomplish this adjustment may seriously affect hood lock and secondary latch operation, and is not recommended.

FRONT FENDER REPLACEMENT—RIGHT

Remove or Disconnect (Figures 3, 4, and 8)

1. Radiator grille.
2. Bumper. Refer to FRAME AND BUMPERS (SECTION 2A).
3. Bumper filler panel.
- Raise and support the hood.
4. Battery.
5. Battery tray to fender bolts.
6. Radiator coolant bottle (if present).
7. Antenna mast and base, if equipped.
8. Windshield wiper arms.
9. Cowl vent grille. Refer to "Cowl Vent Grille Replacement" in this section.

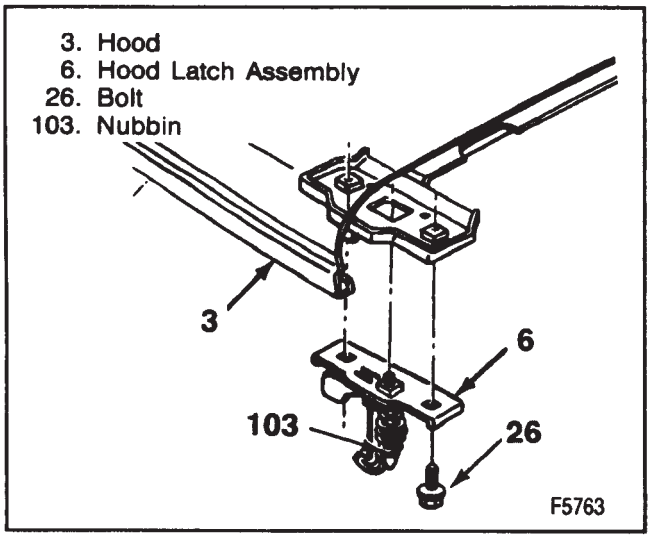

Figure 7—Hood Latch Assembly

10. Hood hinge to fender nut and bolt.
- Support the hood at the rear corner.
11. Fender to radiator support bolts (52).
12. Fender to reinforcement bolt (53).
13. Fender to door frame bolt (54).
14. Fender to door hinge bolts (55).
15. Fender from the vehicle.

Install or Connect (Figures 3, 4, and 8)

1. Fender to the vehicle.

NOTICE: See "Notice" on page 2B-1 of this section.

2. Fender to door hinge bolts (55).
3. Fender to door frame bolt (54).
4. Fender to reinforcement bolt (53).
5. Fender to radiator support bolts (52).
6. Hood hinge to fender nut and bolt.
7. Cowl vent grille. Refer to "Cowl Vent Grille Replacement" in this section.
8. Windshield wiper arms.
9. Antenna mast and base, if equipped.
10. Battery tray to fender bolts.
11. Battery.
12. Radiator coolant bottle (if present).
13. Bumper filler panel.
14. Bumper. Refer to FRAME AND BUMPERS (SECTION 2A).
15. Radiator grille.

FRONT FENDER REPLACEMENT—LEFT

Remove or Disconnect (Figures 3, 4, and 8)

1. Radiator grille.
2. Bumper. Refer to FRAME AND BUMPERS (SECTION 2A).
3. Bumper filler panel.
4. Radiator coolant bottle (if present).
5. Windshield wiper fluid bottle.
6. Hood latch cable.
7. Windshield wiper arms.
8. Cowl vent grille. Refer to "Cowl Vent Grille Replacement" in this section.
9. Hood hinge to fender nut and bolt.
- Support the hood at the rear corner.
10. Fender to radiator support bolts (52).
11. Fender to reinforcement bolt (53).
12. Fender to door frame bolt (54).
13. Fender to door hinge bolts (55).
14. Fender (11) to from vehicle.

Install or Connect (Figures 3, 4, and 8)

1. Fender (11) to the vehicle.

NOTICE: See "Notice" on page 2B-1 of this section.

2. Fender to reinforcement bolt (53).

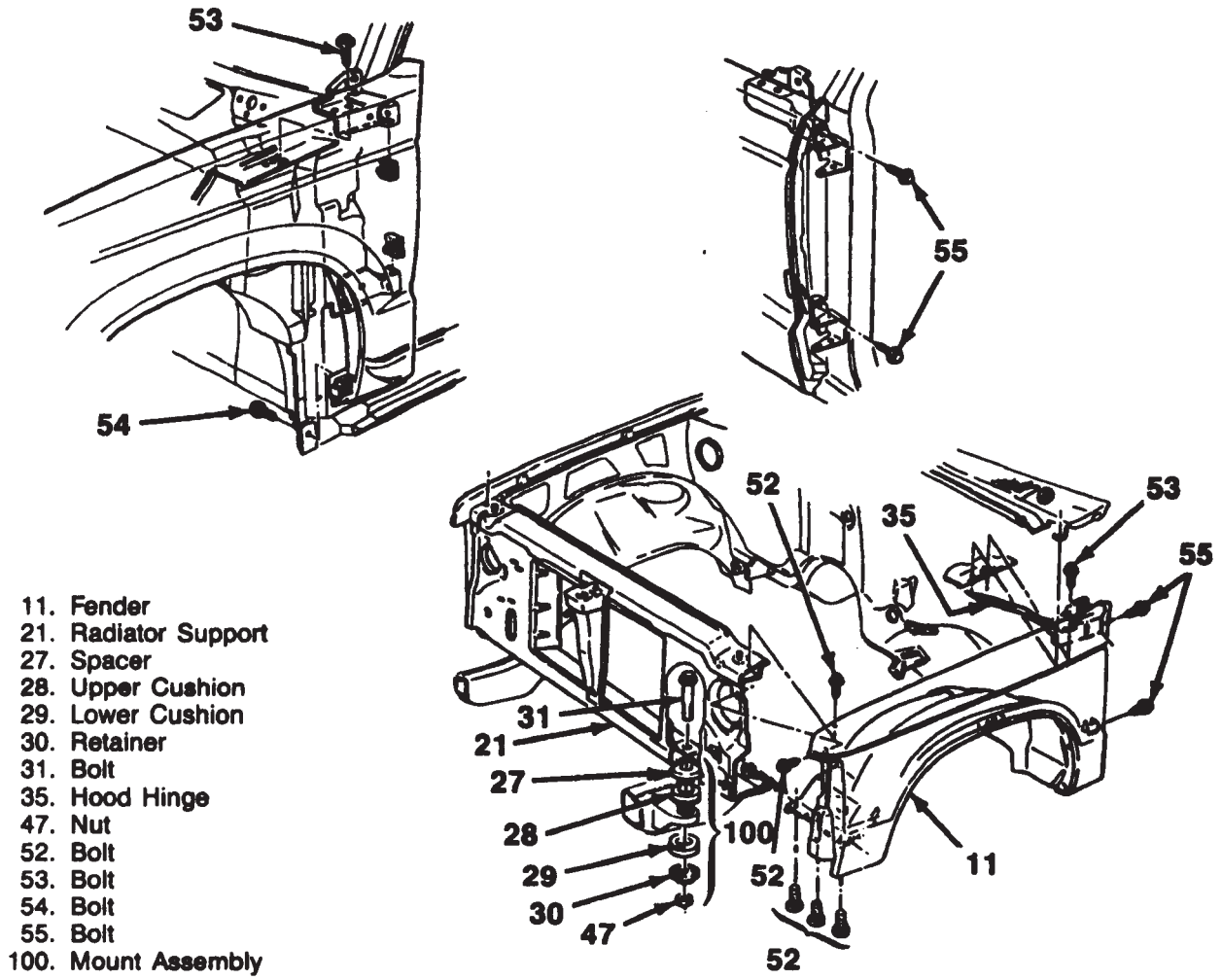

11. Fender
21. Radiator Support
27. Spacer
28. Upper Cushion
29. Lower Cushion
30. Retainer
31. Bolt
35. Hood Hinge
47. Nut
52. Bolt
53. Bolt
54. Bolt
55. Bolt
100. Mount Assembly

F5764

Figure 8—Radiator Support and Fender

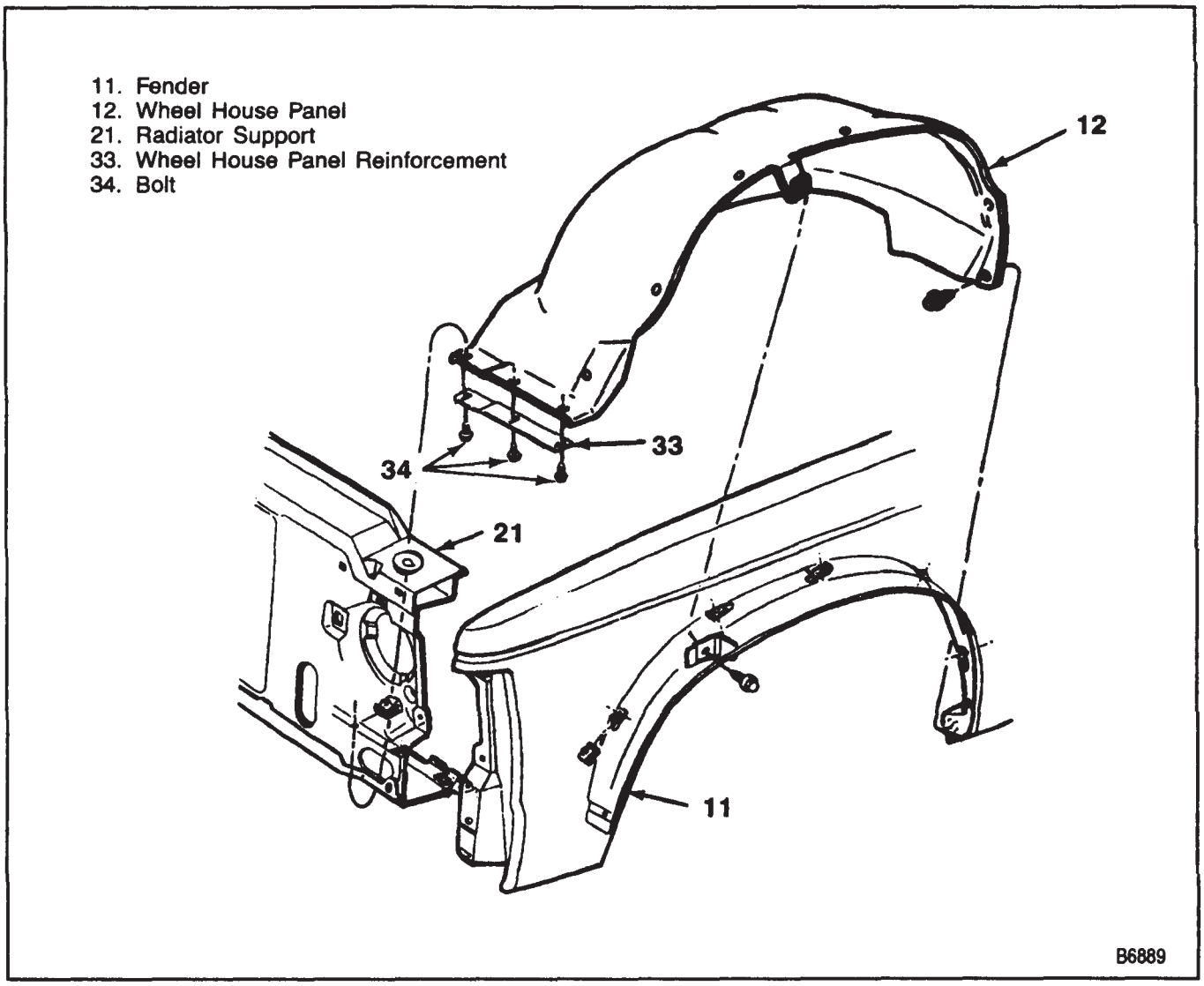

Figure 9—Wheelhouse Panel

3. Fender to radiator support bolts (52).
4. Fender to door hinge bolts (55).
5. Fender to door frame bolt (54).
6. Hood hinge to fender nut (45) and bolt (44).
7. Cowl vent grille. Refer to "Cowl Vent Grille Replacement" in this section.
8. Windshield wiper arms.
9. Hood latch cable.
10. Windshield wiper fluid bottle.
11. Radiator coolant bottle (if present).
12. Bumper filler panel.
13. Bumper. Refer to FRAME AND BUMPERS (SECTION 2A).
14. Radiator grille.

FRONT WHEELHOUSE PANEL REPLACEMENT—RIGHT

Remove or Disconnect (Figure 9)

1. Battery cables.
2. Battery.
3. Battery tray.
4. Ground strap.
5. Heater hose.
6. Wheelhouse to radiator support and fender screws (33).
7. Wheelhouse panel (12) from the fender.
8. Dust shield from the wheelhouse panel (12).

Install or Connect (Figure 9)

1. Dust shield to the wheelhouse panel (12).
2. Wheelhouse panel (12) to the fender (11).

NOTICE: See "Notice" on page 2B-1 of this section.

3. Wheelhouse to radiator support and fender screws (34).
4. Heater hose.
5. Ground strap.
6. Battery tray.
7. Battery.
8. Battery cables.

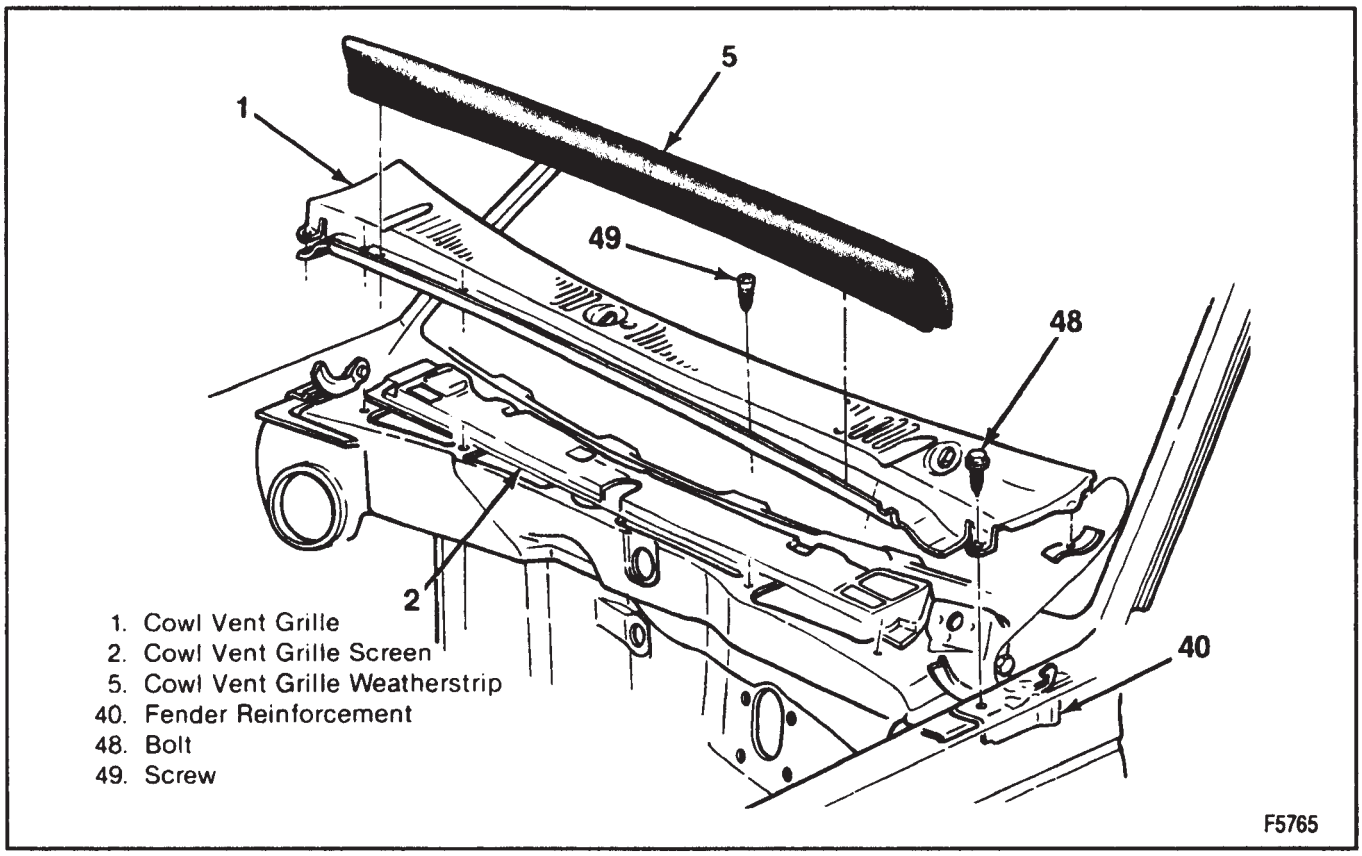

Figure 10—Cowl Vent Grille Components

FRONT WHEELHOUSE PANEL REPLACEMENT—LEFT

Remove or Disconnect (Figure 9)

1. Negative battery cable.
2. Cruise control transducer and power unit (if present).
3. Wheelhouse to radiator support and fender screws (34).
4. Wheelhouse panel (12) from the fender (11).
5. Dust shield from the wheelhouse panel (12).

Install or Connect (Figure 9)

1. Dust shield to the wheelhouse panel (12).
2. Wheelhouse (12) to the fender (11).

NOTICE: See "Notice" on page 2B-1 of this section.

3. Wheelhouse to radiator support and fender screws (34).
4. Cruise control transducer and power unit.
5. Negative battery cable.

COWL VENT GRILLE REPLACEMENT

Remove or Disconnect (Figure 10)

Tools Required:
J 8966 Windshield Wiper Arm Remover and Installer

- Raise and support the hood.

1. Windshield washer hoses.
2. Windshield wiper arms using J 8966.
3. Cowl vent grille weatherstrip (5).
4. Vent grille to cowl screws (49).
5. Vent grille to cowl bolts (48).
   - Apply tape to the rear edge of the hood.
6. Cowl vent grille (1).
   - Lift the front edge of the grille and pull the grille away from the retaining clips.

Install or Connect (Figure 10)

Tools Required:
J 8966 Windshield Wiper Arm Remover and Installer

1. Cowl vent grille (1).
   - Place the rear edge of the grille under the front fender reinforcement clips.

NOTICE: See "Notice" on page 2B-1 of this section.

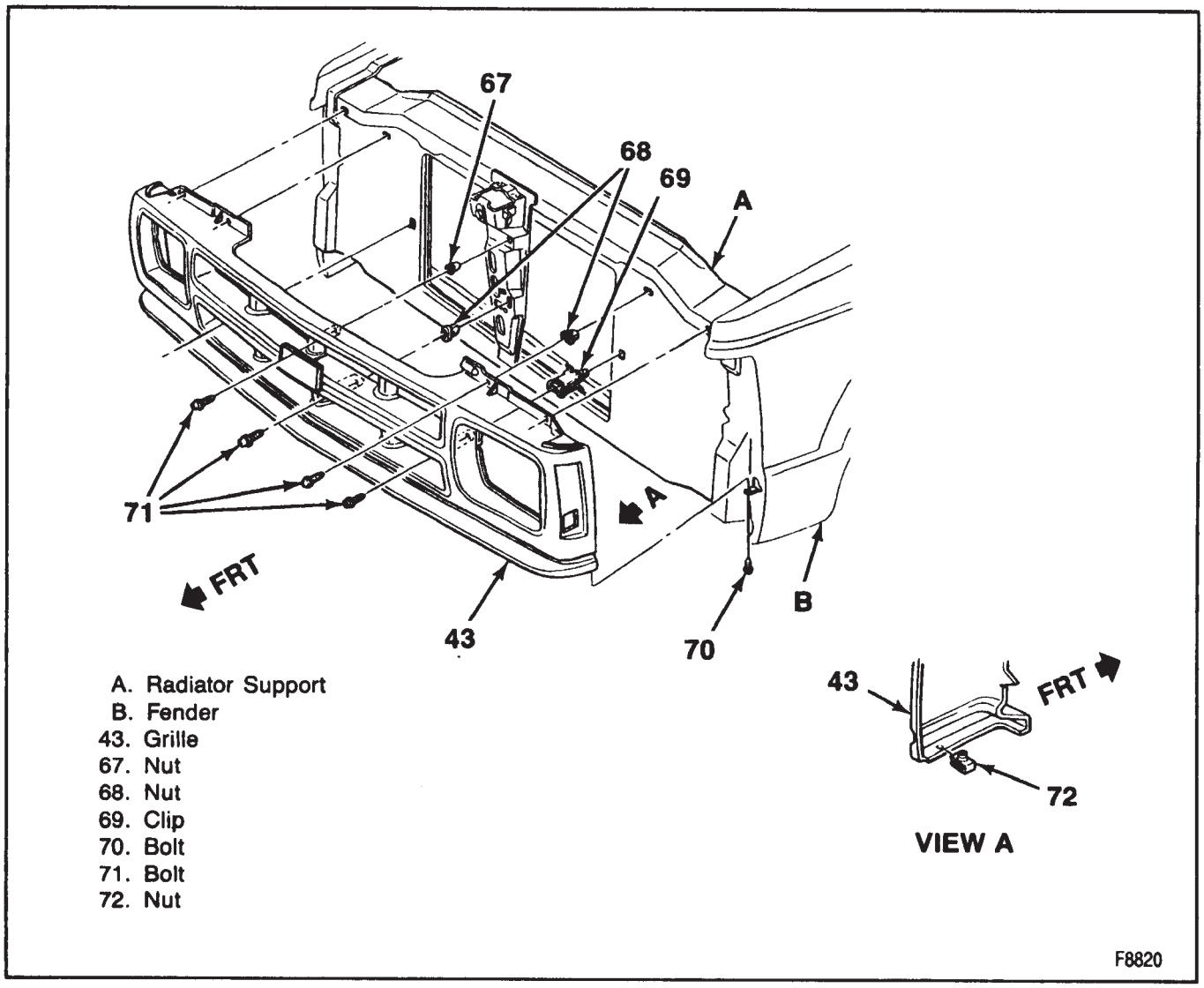

Figure 11—Radiator Grille

2. Vent grille to cowl bolts (48).
3. Vent grille to cowl screws (49).
4. Cowl vent grille weatherstrip (5).
5. Windshield wiper arms using J 8966.
6. Windshield washer hoses.

- Remove the tape from the rear edge of the hood.

GRILLE REPLACEMENT

Remove or Disconnect (Figure 11)

1. Grille to fender bolts (70).
2. Grille to radiator support bolts (71).
3. Grille (43) from vehicle.

Install or Connect (Figure 11)

1. Grille (43) to vehicle.

NOTICE: See "Notice" on page 2b-1 of this section.

2. Grille to radiator support bolts (71).
3. Grille to fender bolts (70).

CENTER SUPPORT REPLACEMENT

Remove or Disconnect (Figures 6, 11, and 12)

- Raise and support the hood.

1. Grille (43).
2. Bumper filler panel.
3. Hood latch cable (42).

NOTICE: See "Notice" on page 2B-1 of this section.

4. Center support to radiator support bolts (100).
5. Center support (24) from the radiator support (21).
6. Primary hood latch (23) from the center support (24).

Install or Connect (Figures 6, 11, and 12)

1. Primary hood latch (23) to the center support (24).
2. Center support (24) to the radiator support (21).

3. Center support to radiator support bolts (100).
4. Hood latch cable (42).
5. Bumper filler panel.
6. Grille (43).

RADIATOR SUPPORT REPLACEMENT

Remove or Disconnect (Figures 1, 2, 6, 8, 11, and 12)

1. Battery.
2. Bumper. Refer to FRAME AND BUMPERS (SECTION 2A).
3. Bumper filler panel.
4. Headlamp assemblies. Refer to LIGHTING SYSTEMS (SECTION 8B).
5. Radiator grille (43).
6. Hood release cable (42) from the support (21) and the hood latch (23).
7. Center support (24).
8. Front wiring harness from the clips.
9. Ground screws from the radiator support bolts.
10. Fan shroud to radiator support bolts.
    - Slide the shroud towards the rear of the vehicle.
11. Horn.
12. Evaporative control canister.
13. Battery tray to radiator support bolts.
14. Radiator baffle (25).

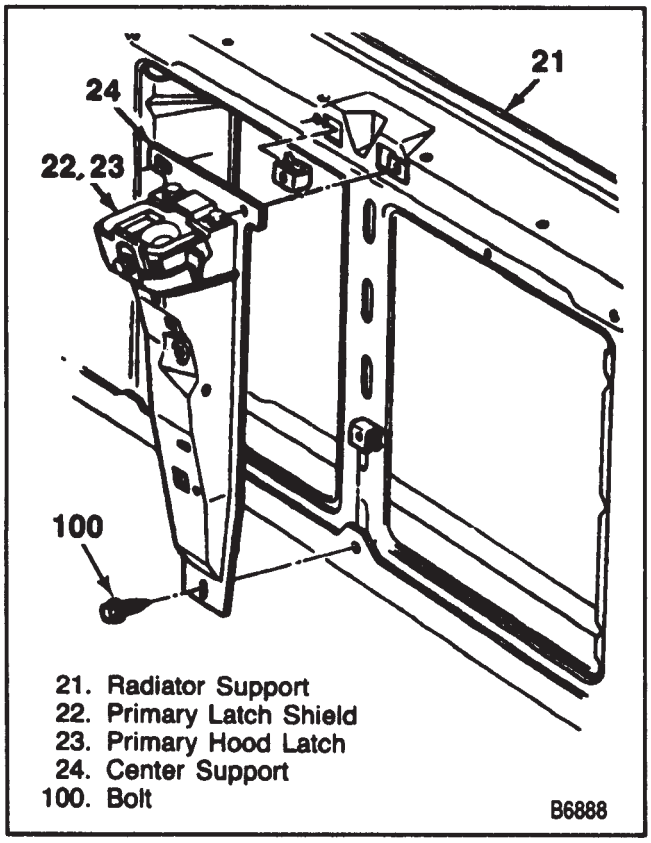

21. Radiator Support
22. Primary Latch Shield
23. Primary Hood Latch
24. Center Support
100. Bolt

Figure 12—Center Support

15. Air conditioning condenser to radiator support bolts (if present). Refer to AIR CONDITIONING (SECTION 1B).
16. Hood support rod (16).
    - Raise and support the hood.
17. Radiator support to right and left fender bolts (52).
18. Radiator support to right and left wheelhouse panel bolts (52).
19. Left wheelhouse panel to fender bolts (34).
20. Radiator support to frame bolts (31).
21. Radiator support frame mounts (101).
22. Radiator support (21).
    - Lightly push the left fender away from the vehicle to allow clearance between the fender and the radiator support.
    - Slide the left side of the support away from the vehicle.

Install or Connect (Figures 1, 2, 8, 11, and 12)

1. Radiator support (21) to the frame.
    - Lightly push the left fender away from the vehicle to allow clearance between the fender and the radiator support.
    - Slide the right side of the support onto the frame, and pivot the left side of the support into place.
2. Radiator support (21) to frame mounts (101).

NOTICE: See "Notice" on page 2B-1 of this section.

    - Bolts (31) through the frame mount (101).
3. Hood support rod (16).
4. Left wheelhouse panel to fender bolts (34).
5. Radiator support to right and left wheelhouse panel bolts (52).
6. Radiator support to right and left fender bolts (52).
7. Air conditioning condenser to radiator support bolts (if present). Refer to AIR CONDITIONING (SECTION 1B).
8. Radiator baffle (25).
9. Battery tray to radiator support bolts.
10. Evaporative control canister.
11. Horn.
12. Fan shroud to radiator support bolts.
13. Ground screws to the radiator support.
14. Front wiring harness to the clips.
15. Air intake hose.
16. Center support (24).
17. Hood release cable (42) to the support (21) and the hood latch (23).
18. Bumper filler panel.
19. Radiator grille (43).
20. Headlamp assemblies. Refer to LIGHTING SYSTEMS (SECTION 8B).
21. Bumper. Refer to FRAME AND BUMPERS (SECTION 2A).
22. Battery.
    - Lower the hood carefully. Check the latch adjustment. Refer to "Hood Latch Adjustment" earlier in this section.

FRONT WHEELHOUSE MOLDING REPLACEMENT

Remove or Disconnect (Figure 13)

1. Molding to fender screws (102).
2. Molding (50) from the fender (11).

Install or Connect (Figure 13)

1. Molding (50) to the fender (11).
2. Molding to fender screws (102).
   - Begin attaching the molding at the pilot hole. Then work forward and rearward from the pilot hole screw.

FRONT FENDER EMBLEM REPLACEMENT

Remove or Disconnect (Figure 14)

1. Fender (11). Refer to "Front Fender Replacement" in this section.
2. Emblem to fender nuts (200).
3. Emblem (51) from the fender (11).

Install or Connect (Figure 14)

1. Emblem (51) to the fender (11).

NOTICE: See "Notice" on page 2B-1 of this section.

2. Emblem to fender nuts (200).
3. Fender (11). Refer to "Front Fender Replacement" in this section.

ADHESIVE—RETAINED MOLDINGS AND EMBLEM REPLACEMENT

These items should be applied in an environment free of dust or dirt that could come in contact with the sticky backing and prevent proper adhesion.

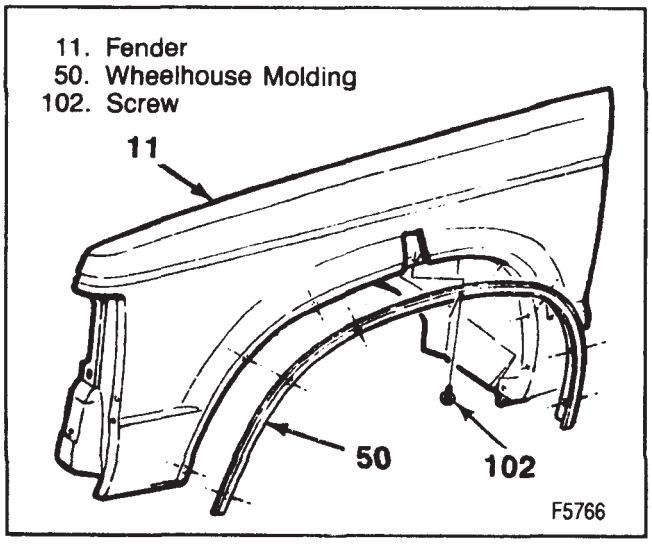

Figure 13—Wheelhouse Molding

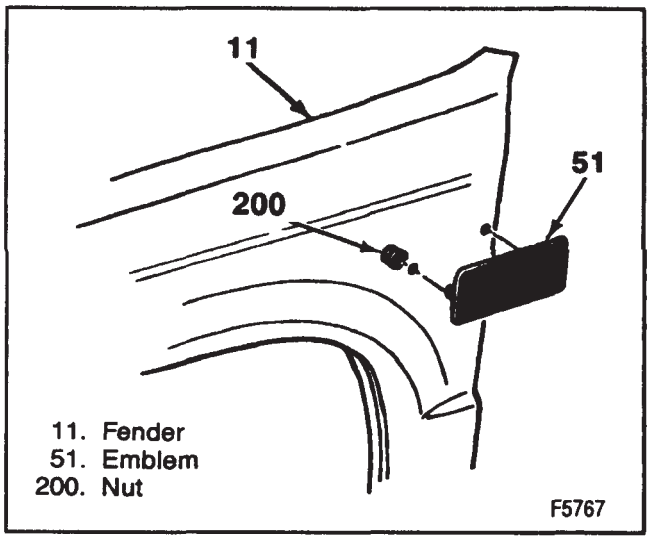

Figure 14—Front Fender Emblem

1. Clean the area where the molding is to be mounted (figure 15). Use a suitable solvent such as a mixture of 50 percent isopropyl alcohol and 50 percent water or equivalent. Dry the area thoroughly.
2. The body area must be at a temperature range of 27°C to 41°C (80°F to 105°F). Heat the area if necessary.
3. The moldings must be at a temperature range of 29°C to 32°C (85°F to 90°F). Place the moldings, adhesive side down, on a heated surface or use a heat lamp or heat gun.
4. Remove the protective liner on the back of the molding.
5. Apply the molding, emblem or script to the body surface
6. Apply equal pressure along the item to uniformly bond it to the body surface. Emblems can be clamped to the body to compress the foam tape.

DECAL REPLACEMENT

Decals should be applied in a clean environment where dust or fibers will not interfere with proper adhesion.

1. Clean the area where the decal will be mounted (figure 16). Use a suitable solvent such as a mixture of 50 percent isopropyl alcohol and 50 percent water. Dry the area thoroughly. If paint in the area is chipped, repaint the area, feathering it in.
2. The body surface and the decal must be warmed to 27°Cto 38°C(80°to 100°F).
3. Most stripes and decals can be applied dry as long as this results in a bubble-free application. Stripes or decals that wrap into body openings or are to be mounted on flexible surfaces must be mounted wet.

   Wet application:

4. Use wetting agent such as Dupont Duponal WA or equivalent. Do not use a soap solution. Duponal is a paste that should be mixed with water (5 percent Duponal WA and 95 percent water). Follow the manufacturer's instructions and warnings that come with the product.

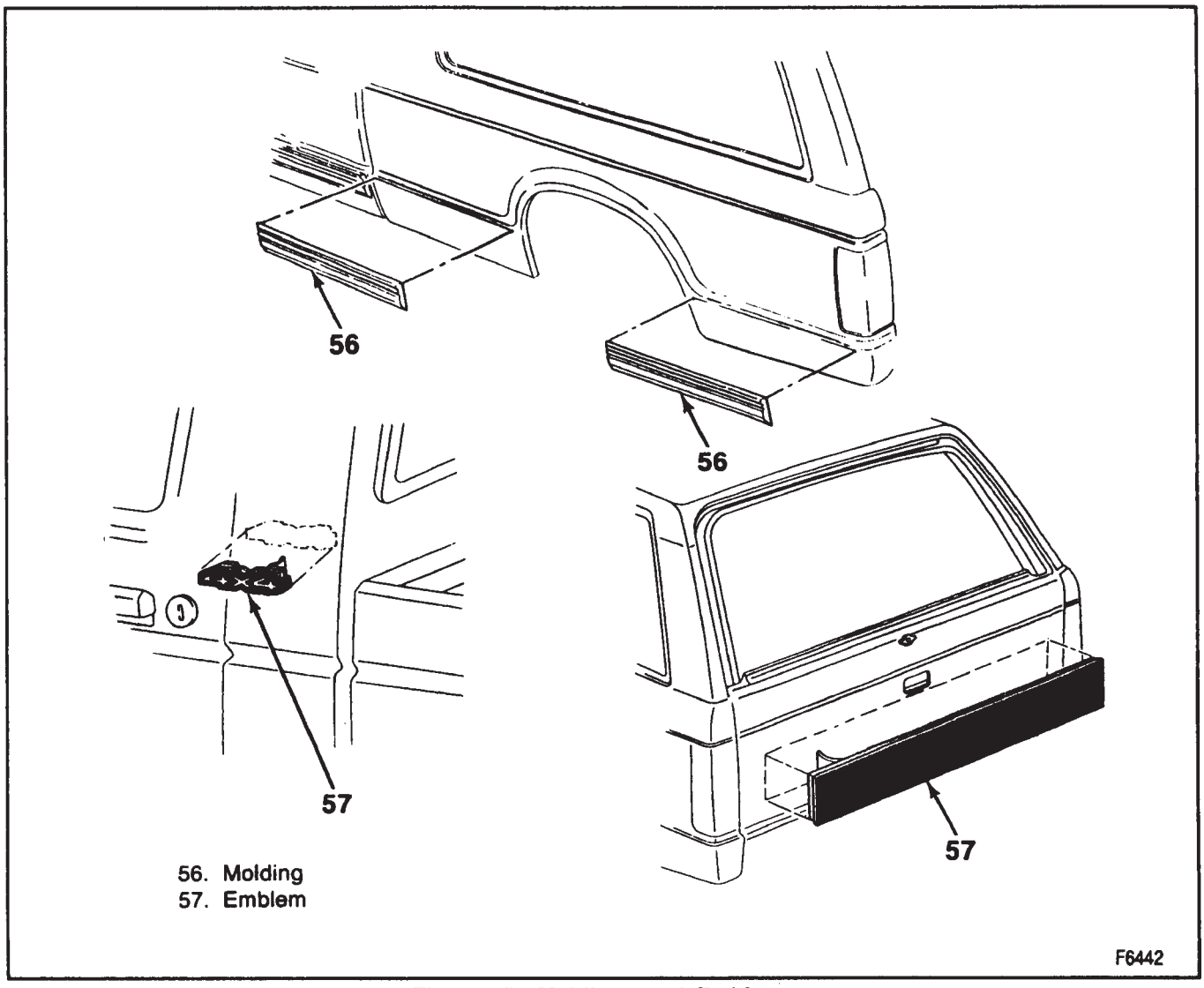

Figure 15—Moldings and Emblems

CAUTION: Do not allow Duponal to contact the eyes or skin as Duponal may cause irritation to the eyes, skin or respiratory tract. Flush any contacted areas with water. Use in a well ventilated area and avoid inhaling fumes. Avoid getting Duponal on any clothing and always wash clothing before reuse.

5. Remove the backing from the decal by peeling it away. In hot, humid weather, the adhesive back of the decal can be sprayed with a mist of the wetting solution.
6. Using a squeegee and starting at the center of the decal, squeegee the decal onto the body removing air bubbles and wetting solution.
7. Remove the premask from the decal by pulling it back onto itself. Do not lift the premask straight up.
8. Go over the decal again with the squeegee.
9. If air bubbles are still present, prick them with a pin.
10. Apply additional heat to at least 60°C (140°F) to decals at or below the belt line of the vehicle. While the body and decal are still hot, a teflon sheathed squeegee should be used to go over the decal again.

RADIATOR GRILLE EMBLEM REPLACEMENT

Remove or Disconnect (Figure 17)

1. Grille (43) from the vehicle.
2. Emblem retaining nuts.
3. Emblem (52) from the grille (43).

Install or Connect (Figure 16)

1. Emblem (52) to the grille (43).
2. Emblem retaining nuts.
3. Grille (43) to the vehicle.

CAB MOUNT REPLACEMENT

When changing cab mounts, it is important to properly support the frame while changing the mount. If only one mount is to be changed, the entire side on which

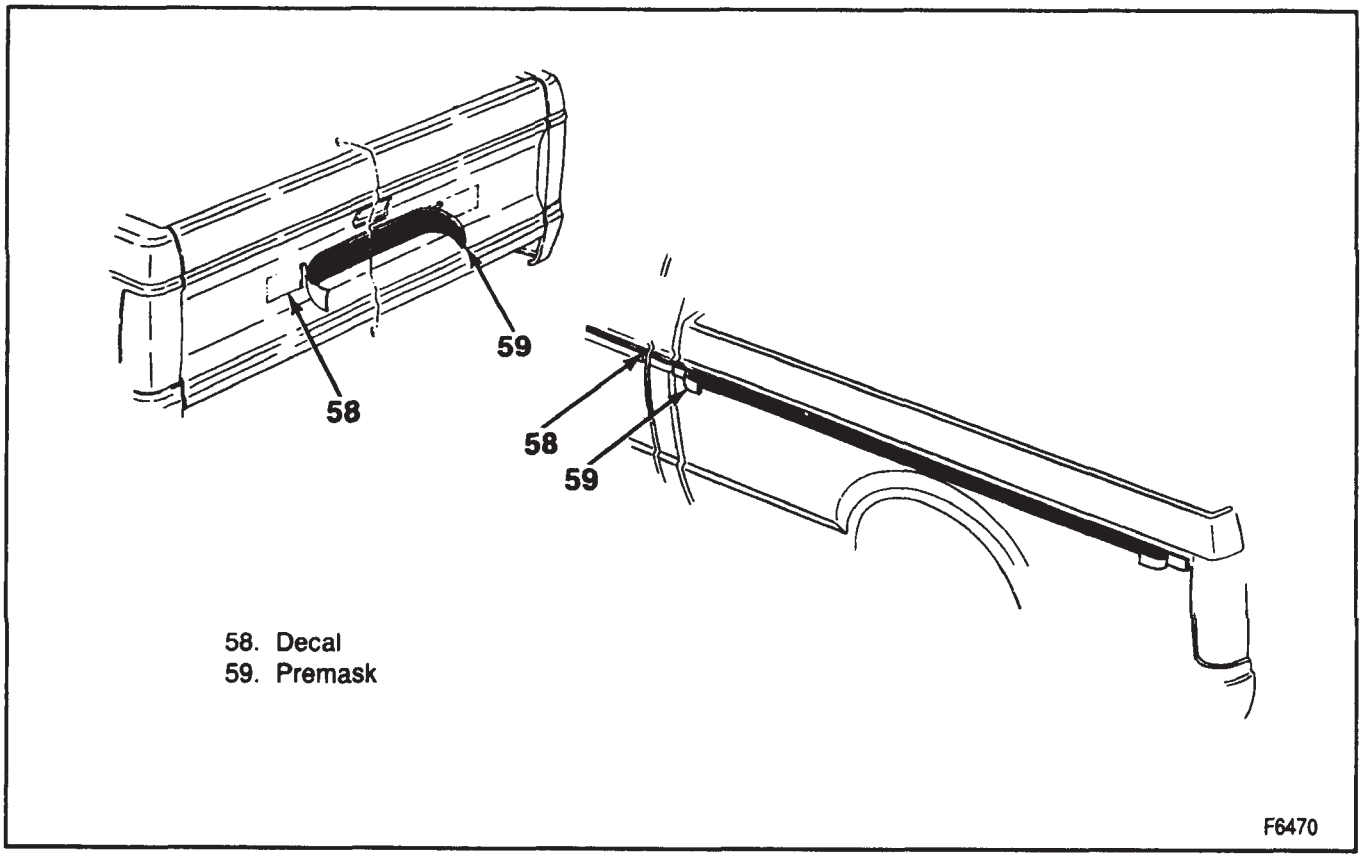

Figure 16—Decals

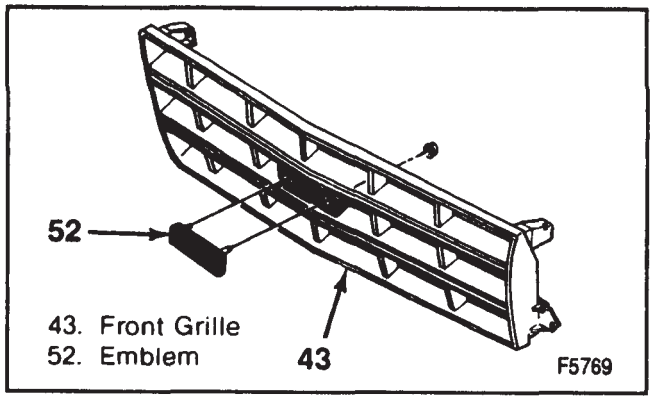

Figure 17—Radiator Grille Emblem

the mount is placed must be lowered enough to provide clearance for the mount.

Shims are available in 1.5 mm (0.05 inch) and 3.00 mm (0.11 inch) sizes and are used to level the cab. The shim stack should not exceed 6.0 mm (0.24 inch).

Remove or Disconnect (Figures 18 and 19)

- Raise the vehicle slightly on the hoist.
- Place jack stands under the body on the side of the vehicle where the mounts will be replaced.

1. Bolt (50).
2. Retainer (49).
3. Lower cushion (48).

- Lower the hoist enough to leave the body supported by the jacks.

4. Upper cushion (47).
5. Spacer (46) (except utility vehicle).
6. Shims (61).

Install or Connect (Figures 18 and 19)

1. Shims (61).
2. Spacer (46) (except utility vehicle).
3. Upper cushion (47).

- Raise the frame slightly on the hoist.

4. Lower cushion (48).
5. Retainer (49).

NOTICE: See "Notice" on page 2B-1 of this section.

6. Bolt (50).

- Remove the jacks.

Tighten

- Bolt to 70 N·m (52 ft. lbs.).

- Lower the hoist.

ANTICORROSION TREATMENT

This vehicle was designed and built to resist corrosion. Application of additional rust-inhibiting materials is not necessary or required under the 6 year/100,000 mile corrosion coverage.

- Some after-manufacture rustproofing may create a potential environment which reduces the corrosion resistance designed and built into this vehicle.

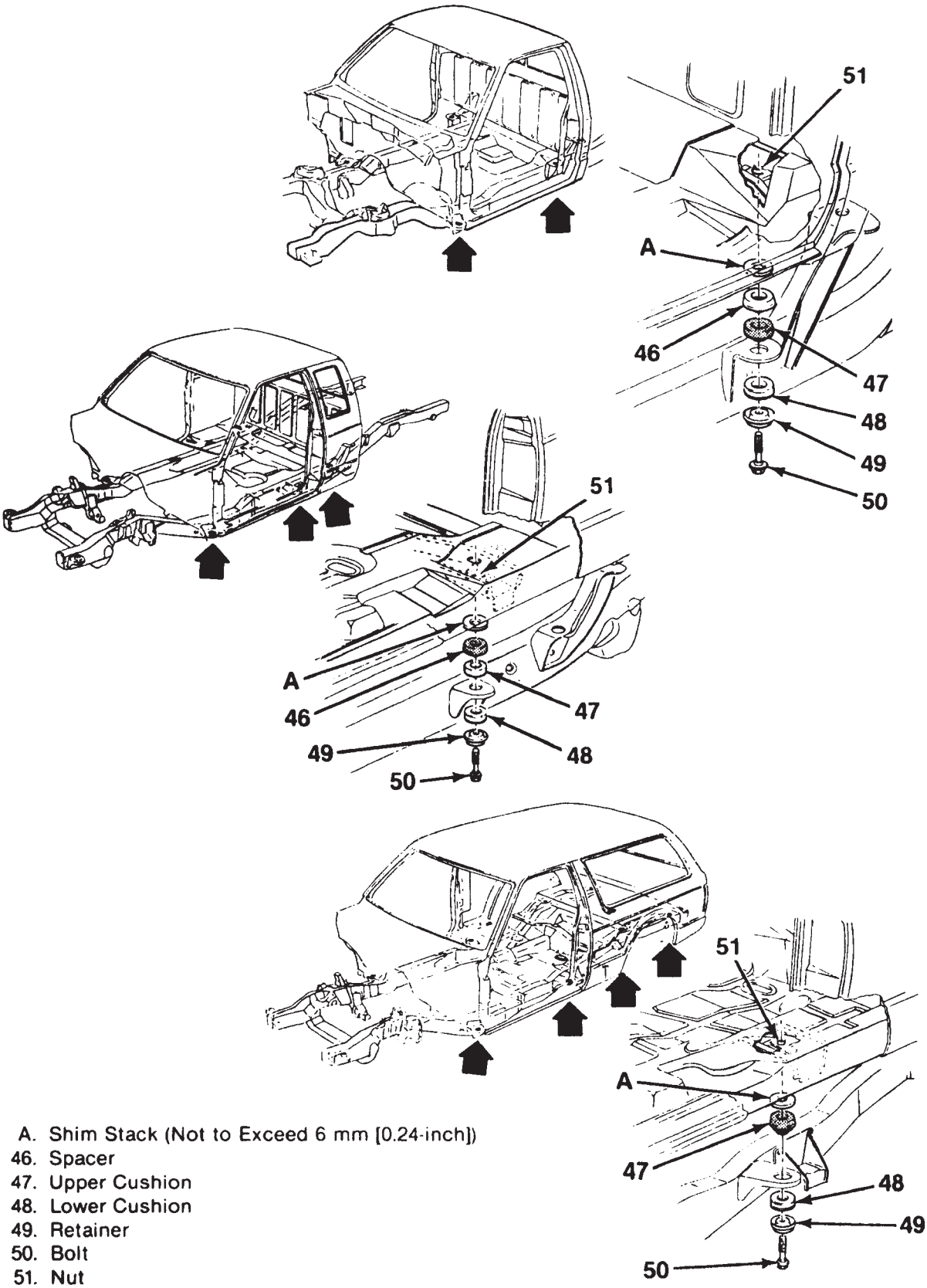

A. Shim Stack (Not to Exceed 6 mm [0.24-inch])
46. Spacer
47. Upper Cushion
48. Lower Cushion
49. Retainer
50. Bolt
51. Nut

Figure 18—Cab Mounts

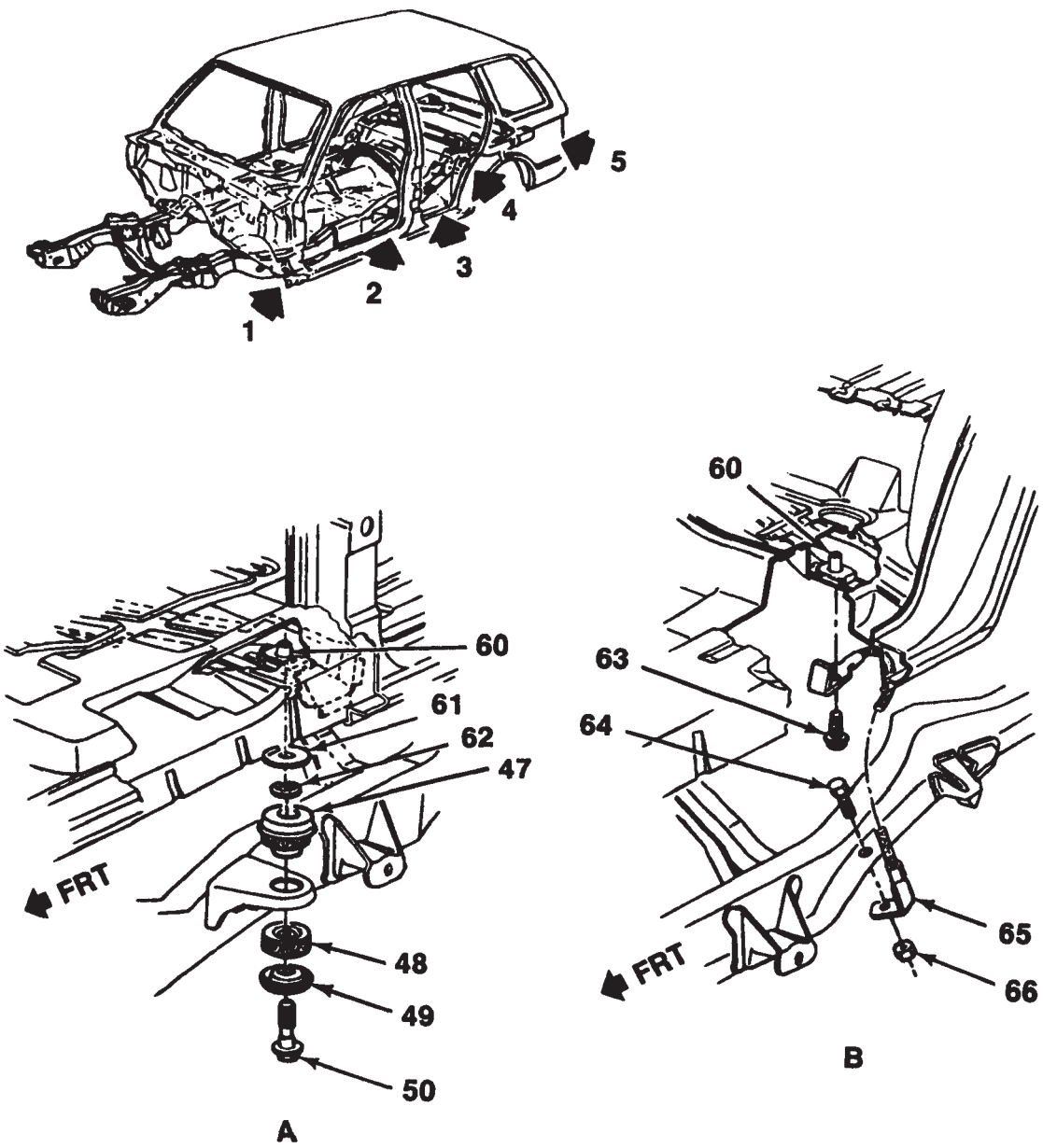

A. Cab Mounts 1, 2, 4 and 5
B. Cab Mount 3 Only
47. Upper Cushion
48. Lower Cushion
49. Retainer
50. Bolt
60. Cage Nut
61. Shim
62. Push-on Nut (Mount 1 R.H. Only)
63. Bolt
64. Bolt
65. Cable Assembly
66. Nut

F8799

Figure 19—Cab Mounts, 4 Door Utility Vehicle

- Depending upon application technique, some after-manufacture rustproofing could result in damage or failure of some electrical or mechanical systems of the vehicle.
- *Repairs to correct damage or malfunctions caused* by after-manufacture rustproofing are not covered under any of the GM new vehicle warranties.

SHEET METAL REPAIR

To help prevent rust, special anticorrosion materials are used on interior surfaces of metal panels. These materials include special metals such as one-sided and two-sided galvanized, zincro-metal and zinc-iron alloy steels. These specially treated metals are used in fenders, doors, quarter panels, rocker panels, floor pans, and other critical areas.

Spray-on materials such as zinc-rich primers and waxes are also applied to interior surfaces. These are mainly used in areas where moisture might gather. Sealers are applied along exposed joints and moisture-repelling asphaltic sound deadeners are applied inside wheel wells and doors, and on some underbody parts.

If, while repairing damaged areas these special treatments are disturbed, the metals may be left unprotected. This could lead to corrosion; therefore, these surfaces should be recoated with service-type anticorrosion materials.

Steps for applying anti-corrosion materials should be:

1. **Clean-up and Preparation**
   Depending on the location of the area, sandblasting, scraping, wire brushing, sandpaper, and steel wool can be used to remove residue.
2. **Applying Primer Coats**
   All bare metal must be primed with an acrylic chromate material.
3. **Applying Sealers**
   All flanged joints, overlap joints, and seams should be sealed with a medium-bodied consistency sealer which stays flexible and is paintable.
   All open joints which require bridging of sealer to close a gap should take a heavy-bodied caulking material.
4. **Applying Color**
   If areas such as underbody, hem flanges, exposed joints and engine compartment need color, follow conventional refinishing preparation, undercoat buildup, and color application procedures. Rubout and extensive sanding of the undercoats is not necessary.
5. **Applying Deadeners**
   Use a heavy-bodied undercoat with a rubberized or asphaltic base. Areas for application can be determined by original production application.
6. **Applying Anticorrosion Material**
   Use a light-bodied material designed to penetrate between close metal-to-metal surfaces such as pinch weld joints, hem flanges, and other attaching points where metal surfaces are difficult to coat with conventional materials.
7. **Conventional Undercoating**
   Apply to large areas such as doors, hoods, fenders, etc. Use care not to spray material into door hardware such as locks, run channels, and window regulator.
   On the underbody the material should not be applied to any moving or rotating parts.
   After undercoating, make sure that all body drain holes are open.

DINGING AND FINISHING

Paint is quickly scuffed off sharp dents leaving metal exposed to rusting and corrosion; therefore, damaged panels should be repaired as soon as possible. Repair damaged panels by forcing outward in the direction opposite to the force which caused the damage. In this way, metal strains, set up when the damage occurred, are relieved.

The importance of proper metal finishing to produce a fairly smooth surface should not be underestimated. The application of a hammer directly to a panel tends to stretch the metal and cause a great deal of unnecessary work. Whenever possible, a spoon should be used under the hammer when bumping a panel.

SHEET METAL ADJUSTMENTS

When aligning sheet metal, start at the fenders where they meet the front edge of the doors and work towards the front of the vehicle.

Align each fender so the rear edge of the fender is within 5.0 ±1.0 mm (0.19 ±0.04 inch) and parallel to the door (figure 20). Align the top edge of the fender so it is within 2.5 ±1.0 mm (0.09 ±0.04 inch) of the cowl vent grille.

Align the hood so the rear edge is within 6.6 ±1.0 mm (0.25 ±0.04 inch) of the cowl vent grille. Each side edge should be within 4.5 ±1.0 mm (0.17 ±0.04 inch) of the fender. If it is difficult to center the hood, or if the hood appears to be out of square, the front end sheet metal may need to be adjusted as a unit.

To adjust the front end sheet metal as a unit, loosen the radiator support retaining bolts. Lightly push the sheet metal into its proper position, and retighten the radiator support bolts.

PAINTING SHEET METAL

REPAINTING

1. Thorough cleaning is necessary. All corrosion, grease, and other foreign matter must be removed. Use of phosphoric base metal conditioners is recommended in preparing steel for painting. These materials vary in method of application and use; they should be used only as directed by the manufacturer. Solvent cleaning, pressure steam cleaning, wire brushing, and hand sanding methods are recommended.
2. Completely remove the old paint by use of organic or alkaline solvents. However, if alkaline removers are used, all traces of alkali must be washed off before primer is applied. If the old primer is very difficult to remove, and if there is no evidence of metal corrosion, the old primer may be left in place.
3. Apply primer, preferably by spraying and allow it to dry. Use a good oxide primer obtained from a reputable manufacturer.

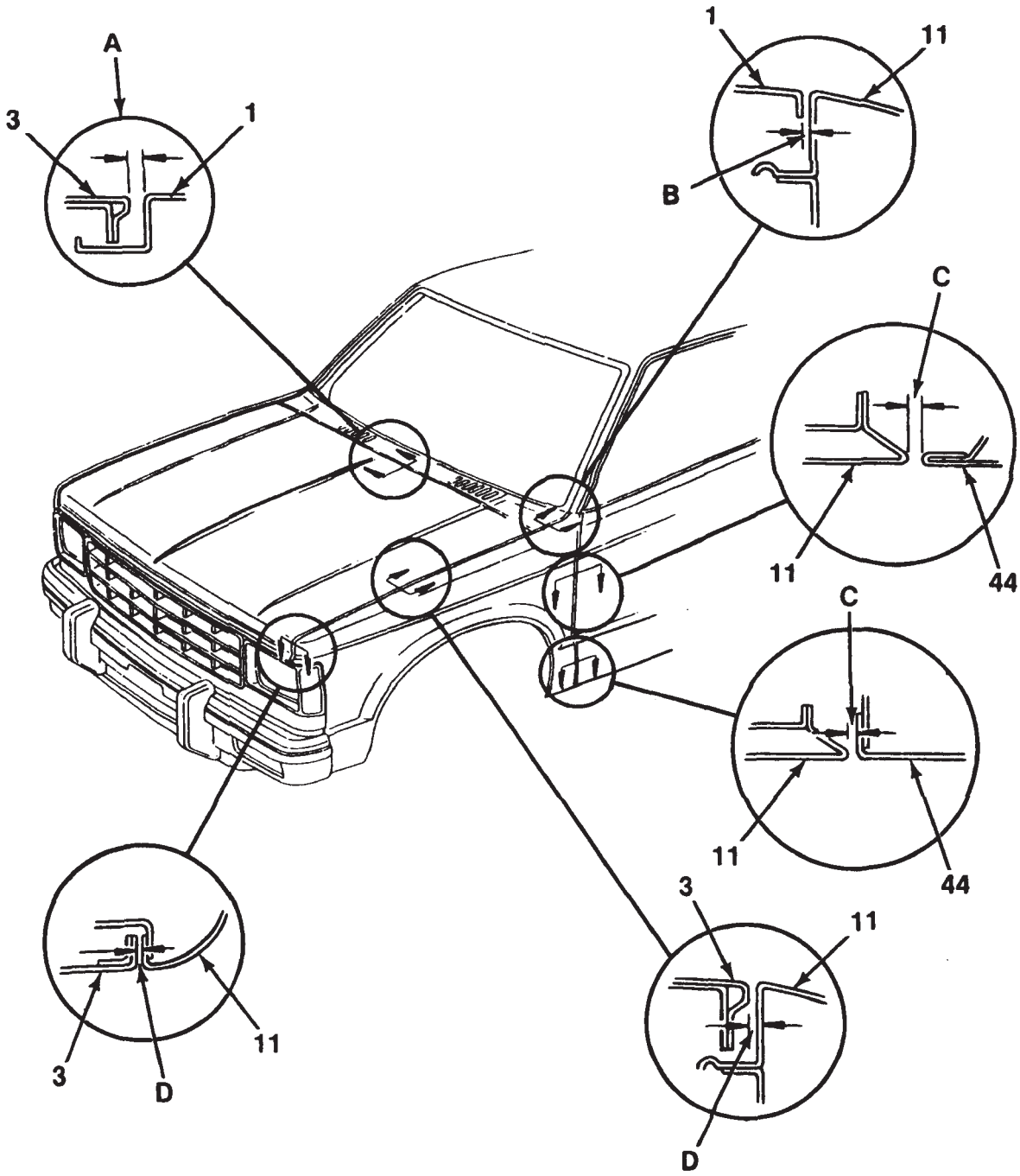

1. Cowl Vent Grille
3. Hood
11. Fender
44. Door

A. 6.6 ± 1.0 mm (0.26 ± 0.04-inch) and parallel within 1.5 mm (0.06-inch)
B. 2.5 ± 1.0 mm (0.09 ± 0.04-inch) and parallel within 0.5 mm (0.02-inch)
C. 5.0 ± 1.0 mm (0.19 ± 0.04-inch) and parallel within 1.0 mm (0.04-inch)
D. 4.5 ± 1.0 mm (0.17 ± 0.04-inch) and parallel within 1.5 mm (0.06-inch)

F-05771

F5771

Figure 20—Sheet Metal Adjustments

4. Apply the finish coats.
   a. For the understructure, or other parts not requiring color, apply two coats of a good air-drying black or other automotive lacquer.
   b. *To exposed body parts, apply surfacer and* paint in accordance with standard practice.

ANTI-CHIP COATING REPLACEMENT

The rocker panels were treated with a chip resistant coating before the color coat application. When these areas are being repaired the anti-chip coating should be applied before the paint.

1. Remove the old paint and special coating from the panels.
2. Sand the area smooth.
3. *Apply primer to the surface.*
4. Mix the anti-chip material such as Immont (R-M 891 or PPG Roadguard DX-54) following the manufacturers directions.
5. Apply 4 to 6 coats of the mixture with a feed gun, following manufacturer's directions for gun pressure and drying time.
6. Apply paint.

PAINT CODES

The following are the paint code letters and numbers for the refinishing paint suppliers.

DuPont refinish paints are available in:

- L-Lucite—Acrylic Lacquer
- A-Centari—Acrylic Enamel
- D-Dulux—Enamel
- 355S-Flexible Additive
- 1234 Vinyl Lacquer-Chip Resistant

NOTE: Vinyl Resin must be added to the base color when painting interior components.

DuPont Vinyl Resin #304—Instrument Panel

DuPont Vinyl Resin #305—All Remaining Interior Parts Except Seats

DuPont Vinyl Resin #306—Seats and Vinyl Roofs

When ordering DuPont paint, use "L," "A," "D," 355S or 1234 with the appropriate DuPont code.

Ditzler refinish paints are available in:

- DBU-Deltron Acrylic Basecoat Clearcoat
- DDL-Duracryl-Acrylic Lacquer
- DAR-Delstar-Acrylic Enamel
- DAU-Deltron-Acrylic Urethane
- DIA-Interior Lacquer
- UCV-Vinyl Colors
- *DX-369-Flexative-Flexible Finishes*
- DX-54-Roadguard-Road Abrasion Protection

When ordering Ditzler paint use "DDL," "DBU","DAR," "DAU," "UCV," "DX-369," or "DX-54" with the appropriate Ditzler code.

Sherwin-Williams, Acme/Rogers, and Martin-Senour refinish paints are available in acrylic lacquer or acrylic enamel.

S-W use: prefix 34, J4, or L10 for acrylic lacquer
prefix 35, J5, or F10 for acrylic enamel
Acme use: prefix 84 for acrylic lacquer
prefix 85 for acrylic enamel
Rogers use: prefix 94 for acrylic lacquer
prefix 95 for acrylic enamel

Martin Senour: jobber will interchange the number shown when acrylic lacquer is needed.

EXTERIOR COLORS

GM Code	Fisher Code	Color	DuPont	BASF	PPG Ditzler	Martin Senour	Sherwin Williams Acme/Rogers
12	5111	White	817	1347	2185	30-3563	L10A-1369 1492
17	7468	Slate Gray*	B8235	12866	3453	30-5142	32377 32377
19	5118	Black	99S	-	9000 9300	8800	L10B-1738 3000
24	9222	Bright Blue Metallic	B8894	18120	4110	38144	38144 38144
25	9830	Bright Teal	B9224	22263	4469	45877	45877
26	9662	Light Blue	-	-	-	-	-
43	9663	Seafoam Green	-	-	-	-	-
47	9095	Dark Blue Metallic	B9019	20052	4251	42479	42479
48	9096	Dark Red	B9020	20053	4239	42480	42480
72	7475	Bright Red	B8241	12885V	3464	30-5120	32097 32097
90	8798	Gray Metallic	B8629	16118	3916	30-5490	35367 35367

*Accent Color

T2005

SPECIFICATIONS

Item	N·m	Ft. Lbs.
Hood Primary Latch Catch Assembly Bolt	10	90*
Primary Latch Shield Bolts	10	90*
Hood Primary Latch Bolt	27	20
Cab Mount Bolts	70	52
Number 3 Cab Mount Cable to Frame Nut (4 Door Utility Vehicle)	45	33
Number 3 Cab Mount Cable to Cab Bolt (4 Door Utility Vehicle)	70	52
Radiator Grille to Radiator Support Bolts	1.4	12*
Radiator Grille to Front Fender Bolts	2	18*

*Inch Pounds

T2341

SPECIAL TOOLS

1. 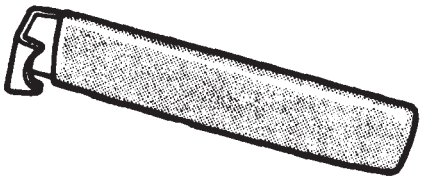 J-8966

1. Windshield Wiper Arm Remover and Installer

F2705

SECTION 3

STEERING, SUSPENSION, WHEELS AND TIRES

CONTENTS

SUBJECT	PAGE
Front End Alignment	3A-1
Power Steering	3B1-1
Manual Steering	3B2-1
Steering Linkage	3B3-1
Front Suspension	3C-1
Rear Suspension	3D-1
Wheels and Tires	3E-1
Steering Column—Standard	3F1-1
Steering Column—Tilt	3F2-1

SECTION 3A

FRONT END ALIGNMENT

***NOTICE:** When fasteners are removed, always reinstall them at the same location from which they were removed. If a fastener needs to be replaced, use the correct part number fastener for that application. If the correct part number fastener is not available, a fastener of equal size and strength (or stronger) may be used. Fasteners that are not reused, and those requiring thread locking compound will be called out. The correct torque value must be used when installing fasteners that require it. If the above conditions are not followed, parts or system damage could result.*

CONTENTS

SUBJECT	PAGE
Description	3A-2
Diagnosis of Front End Alignment	3A-3
On-Vehicle Service	3A-3
Definition of Terms	3A-3
Inspection	3A-4
Caster and Camber Adjustment	3A-4
Toe-In Adjustment	3A-4
Rear Axle Housing Alignment	3A-5
Trim Height Specifications	3A-5
Specifications	3A-7

DESCRIPTION

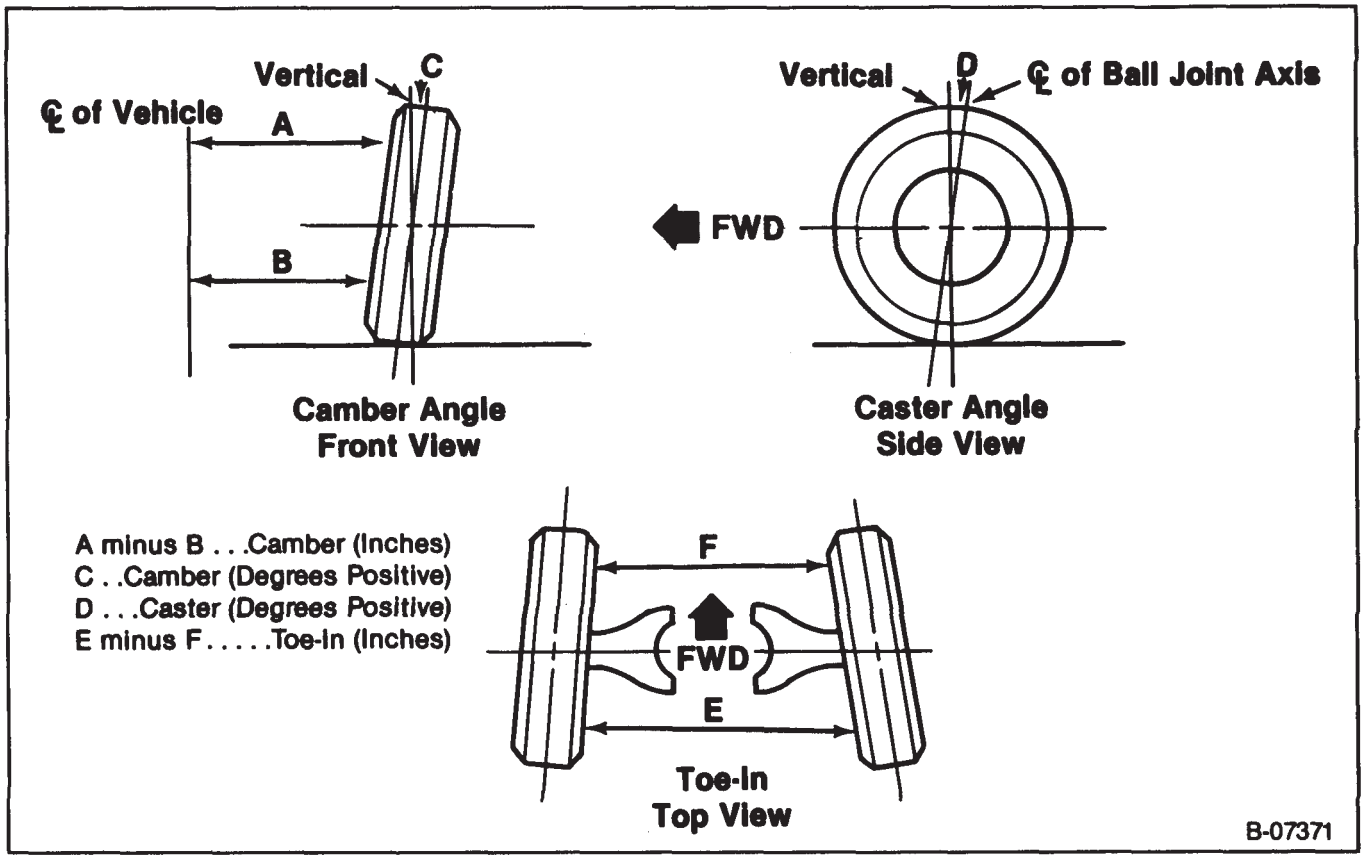

Figure 1—Caster - Camber - Toe-In

"Front End Alignment" refers to the angular relationship between the suspension attaching parts, the wheels and the ground. Proper alignment is considered essential for efficient steering, good directional stability, and to prevent abnormal tire wear. The most important factors of front end alignment are wheel toe-in, wheel camber, and axle caster (figure 1).

DIAGNOSIS OF FRONT END ALIGNMENT

PROBLEM	POSSIBLE CAUSE	CORRECTION
Noisy Front End.	1. Worn tie rod ends. 2. Loose suspension bolts. 3. Lack of proper lubrication. 4. Loose shock absorbers or worn bushings. 5. Loose stabilizer bar.	1. Replace the ends. 2. Refer to FRONT SUSPENSION (SEC. 3C). 3. Refer to MAINTENANCE AND LUBRICATION (SEC. 0B). 4. Tighten bolts and/or replace bushings. 5. Tighten.
Wheel Bounce	1. Tire and wheel out of balance. 2. Blister or bump on tire. 3. Improper shock absorber action. 4. Excessive wheel or tire run-out. 5. Tire "Lead."	1. Refer to WHEELS AND TIRES (SEC. 3E). 2. Replace the tire. 3. Replace the shock absorber. 4. Refer to WHEELS AND TIRES (SEC. 3E). 5. Refer to WHEELS AND TIRES (SEC. 3E).
Low or Uneven Trim Height.	1. Broken or sagging springs. 2. Overloaded or improperly loaded vehicle.	1. Replace the springs. 2. Avoid overloading the vehicle.
Excessive Tire Wear.	1. Incorrect wheel alignment. 2. Failure to rotate tires. 3. Damaged shock absorbers. 4. Improper tire pressure. 5. Overloaded or improperly loaded vehicle. 6. Broken or sagging springs.	1. Align the wheels. 2. Refer to WHEELS AND TIRES (SEC. 3E). 3. Replace the shock absorber. 4. Refer to WHEELS AND TIRES (SEC. 3E). 5. Avoid overloading the vehicle. 6. Replace the springs.

ON-VEHICLE SERVICE

DEFINITION OF TERMS

CAMBER (Figure 1)

Camber is the inward or outward tilting of the front wheels from the vertical. When the wheels tilt outward at the top, the camber is positive (+). When the wheels tilt inward at the top, the camber is negative (-). The amount of tilt measured in degrees from the vertical is called the camber angle.

If the camber is extreme or unequal between the wheels, improper steering and excessive tire wear will result. Negative camber causes wear on the inside of the tire, while positive camber causes wear to the outside.

CASTER (Figure 1)

Caster is the tilting of the front steering axis either forward or rearward from the vertical. A rearward tilt is said to be positive (+) and a forward tilt is said to be negative (-).

Incorrect caster may result from damaged control arms and other related front suspension parts. Refer to FRONT SUSPENSION (SEC. 3C). Also, uneven or spotty tire wear is a sign of unequal caster and camber settings.

TOE-IN (Figure 1)

Toe-in is the turning in of the front wheels. The actual amount of toe-in is normally only a fraction of a degree. Toe-in is measured from the center of the tire treads or from the inside of the tires. The purpose of toe-in is to insure parallel rolling of the front wheels and to offset any small deflections of the wheel support system which can occur when the vehicle is rolling forward. Incorrect toe-in results in excessive toe-in and unstable steering. Toe-in is the last alignment angle to be set in the front end alignment procedure.

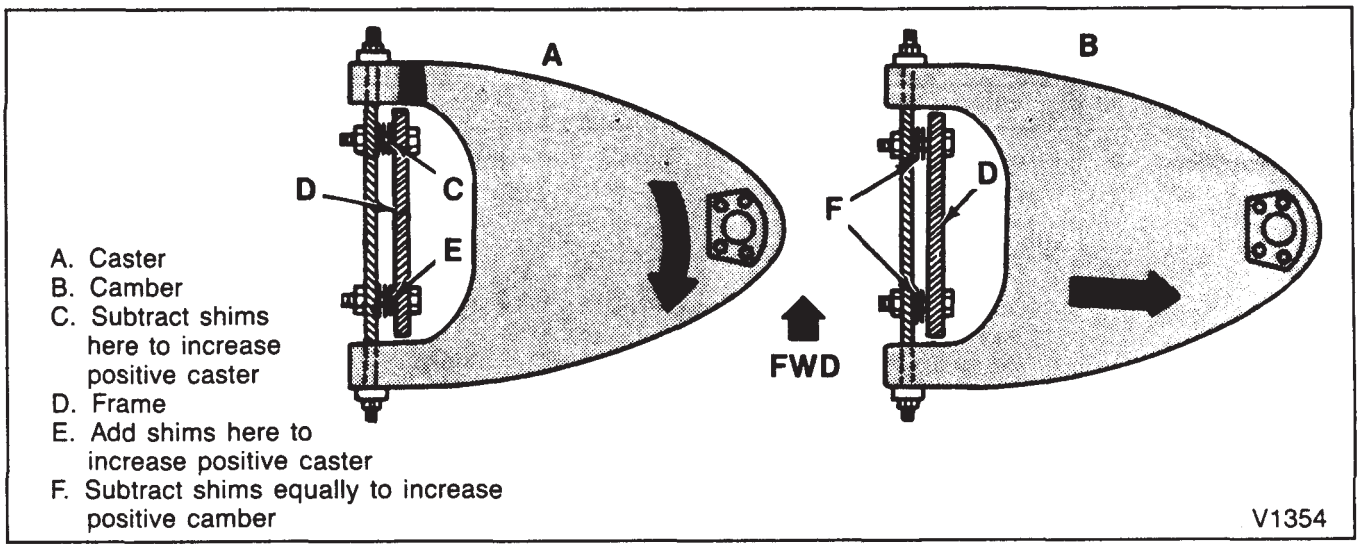

Figure 2—S Models Caster-Camber Adjustment

INSPECTION

Before making any adjustments affecting caster, camber or toe-in, the following front end inspection should be made:

Inspect

1. Tires for proper inflation pressure. Refer to WHEELS AND TIRES (SEC. 3E).
2. Front wheel bearing for proper adjustment. Refer to FRONT SUSPENSION (SEC. 3C).
3. Ball joints, tie rod ends, and relay rods.
4. Wheels and tires for run-out. Refer to WHEELS AND TIRES (SEC. 3E).
5. Vehicle trim heights (refer to "Trim Height Specifications" in this section). Any corrections must be made before adjusting caster, camber or toe-in.
6. Steering gear for looseness at the frame.
7. Shock absorbers for leaks or any noticeable noise. Refer to FRONT SUSPENSION (SEC. 3C).
8. Control arms or stabilizer bar attachments for looseness. Refer to FRONT SUSPENSION (SEC. 3C).
9. Alignment equipment. Follow the manufacturer's instructions.
10. Level of the vehicle. The vehicle must be on a level surface, fore and aft, and transversely.

CASTER AND CAMBER ADJUSTMENT

Important

- Before adjusting caster and camber angles, the front bumper should be raised and released twice to allow the vehicle to return to its normal height. Refer to "Trim Height Specifications" in this section.

S-MODELS

Caster and camber adjustments are made by inserting shims between the upper control arm shaft and the frame bracket. Shims may be added, subtracted or transformed to change the readings (figure 2).

To adjust caster and camber, loosen the upper control arm shaft-to-frame nuts, add or subtract shims as required, and torque the nuts. Toe-in must be checked after changing caster or camber.

1. CASTER — Transfer shims from front to rear or rear to front.
   - The transfer of one shim from the rear bolt to the front bolt will decrease positive caster.
2. CAMBER — Change shims at both the front and rear of the shaft.
   - Adding an equal number of shims at the both front and rear of the cross shaft will decrease positive camber.

A normal shim pack will leave at least two threads of the bolt exposed beyond the nut. The difference between front and rear shim packs must not exceed 10 mm (0.40-inch). If these requirements cannot be met, check for damaged control arms and related parts.

Tighten the nut on the thinner shim pack first. This improves shaft-to-frame clamping force and torque retention.

T-MODELS (Figure 3)

Caster and camber adjustments are made by means of cams on the upper control arm frame attaching bolts.

To adjust caster and camber, loosen upper control arm-to-frame attaching nuts. Rotate cam by rotating bolt head.

1. CASTER — To increase positive caster, move the front cam lobe inboard and the rear cam lobe outboard.
2. CAMBER — To increase positive camber, move both front and rear cam lobes inboard.

Torque the nuts after selecting the proper cam position. Refer to FRONT SUSPENSION (SEC. 3C).

TOE-IN ADJUSTMENT

NOTICE: See 'Notice' on page 3A-1.

Tie rod adjuster parts often become rusted in service. If the torque required to remove the nut from the bolt after breakaway exceeds 9.0 N·m (7 ft. lbs.), discard the nuts and bolts. Apply penetrating oil between the clamp and tube and rotate the clamps until they move freely. Install new bolts and nuts with the correct part number.

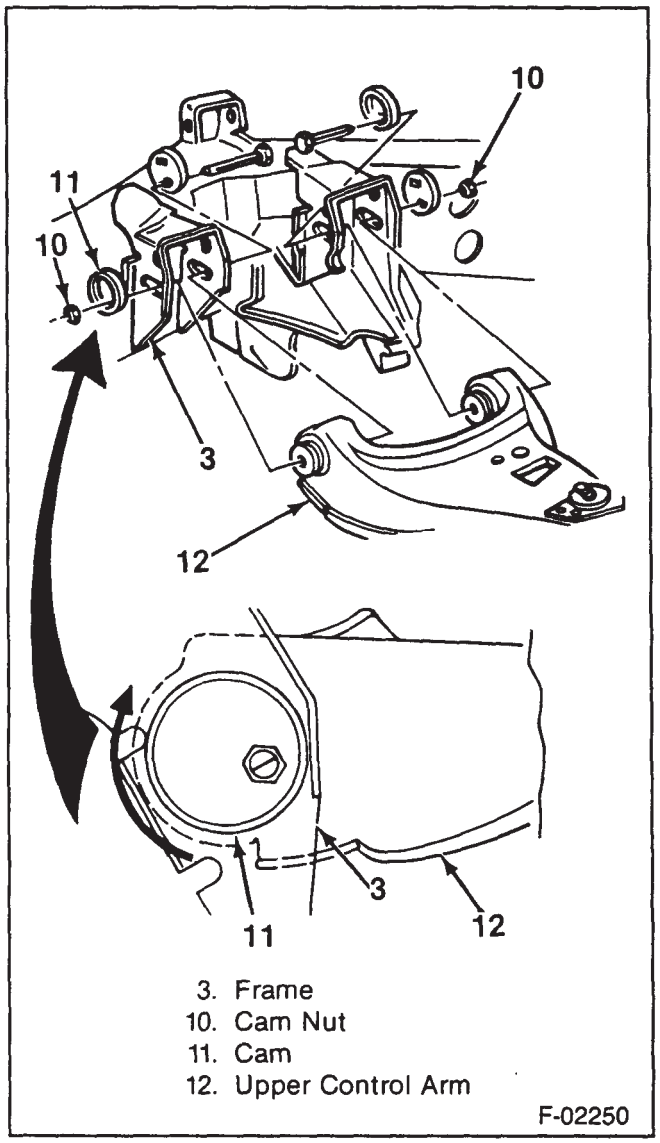

Figure 3—T Models Caster-Camber Adjustment

Toe-in can be increased or decreased by changing the length of the tie rods. A threaded sleeve is provided for this purpose.

When the tie rods are mounted ahead of the steering knuckle they must be:

- Decreased in length to increase toe-in.
- Increased in length to decrease toe-in.

Adjust

- Loosen the clamp bolts at each end of the steering tie rod adjustable sleeves.
- Set the steering wheel in straight ahead position.
- Turn the tie rod adjusting sleeves to obtain proper toe-in specification.
- Check the number of threads inside the adjuster sleeve. They must be equal to within three threads. Refer to STEERING LINKAGE (SEC. 3B3) for clamping instructions.

REAR AXLE HOUSING ALIGNMENT

If an alignment machine or rear tire wear indicates that the axle housing may be misaligned, bent, or rear springs mislocated, the alignment can be checked as follows.

1. Check the vehicle onto an alignment machine.
2. Compensate rear wheels along with fronts (If necessary).
3. Check camber reading which should be 3 degrees negative to 5 degrees positive.
4. Check the amount of toe-out which should be 0 degree to 0.05 degree or 0 to 1.58 mm (0 to 1/16 inch).
   - If it is necessary to back the vehicle onto an alignment machine to measure the alignment, the actual toe-out will be read on the scale as toe-in. If toe-out is checked with a tram gage, disregard this step.
   - If a tram is used for checking toe-out, still perform steps 1 and 2 to check camber.

The rear end cannot be aligned by conventional means. The axle housing and springs, if bent or damaged, must be replaced. The frame under most circumstances could be straightened. The necessary straightening operations may be performed using frame straightening equipment or by relocating the spring to the axle without removing the axle housing from the vehicle. This procedure will allow checks during the straightening operation to determine when the axle-spring assembly is within the correct limits.

If it is found that the frame and springs are within specification, the rear axle assembly itself is at fault it must be replaced.

Important

- Under no circumstances should the axle housing be straightened to correct an alignment problem. If it is determined the axle assembly is at fault it must be replaced.

TRIM HEIGHT SPECIFICATIONS

VEHICLE HEIGHTS (Figures 4 through 7)

1. Lift the front bumper of the vehicle up about 38 mm (1.5-inch). Let the vehicle settle. Do this three times. Measure "Z" dimension.
2. Push the front bumper down 38 mm (1.5-inch). Let the vehicle settle. Do this three times. Measure "Z" dimension.

   Important

   - True height is the average of the high and low measurements.
3. Lift the rear bumper of the vehicle up about 38 mm (1.5-inch). Let the vehicle settle on its own. Do this three times. Measure "D" dimension.
4. Push the rear bumper of the vehicle down about 38 mm (1.5-inch). Let the vehicle rise on its own. Do this three times. Measure the "D" dimension.

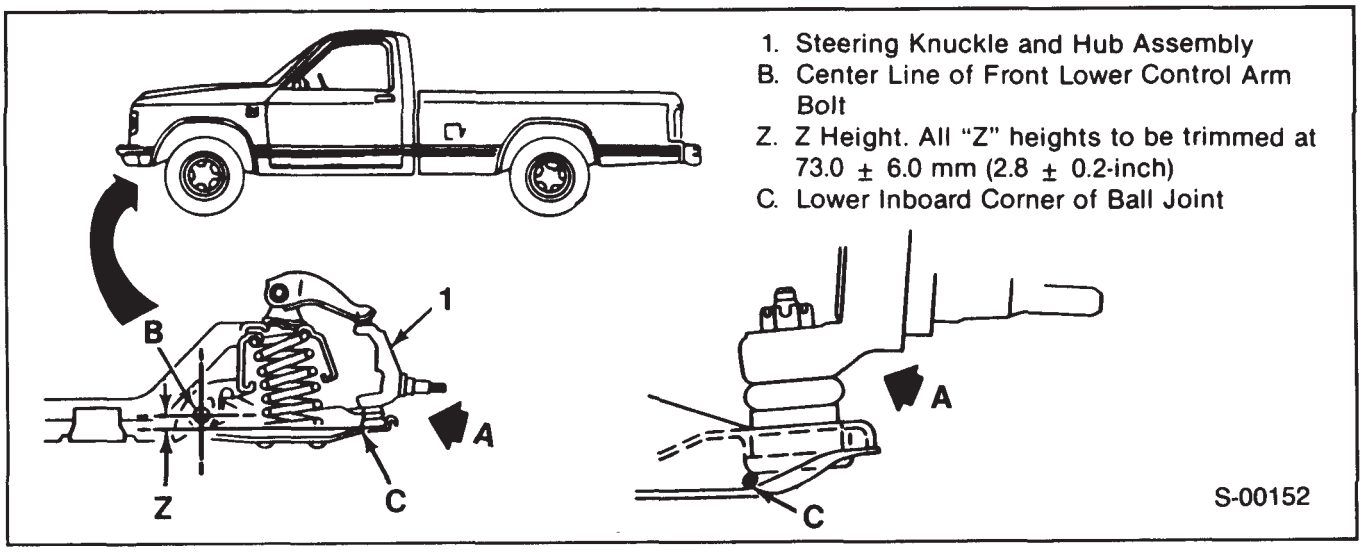

Figure 4—S Models - "Z" Height

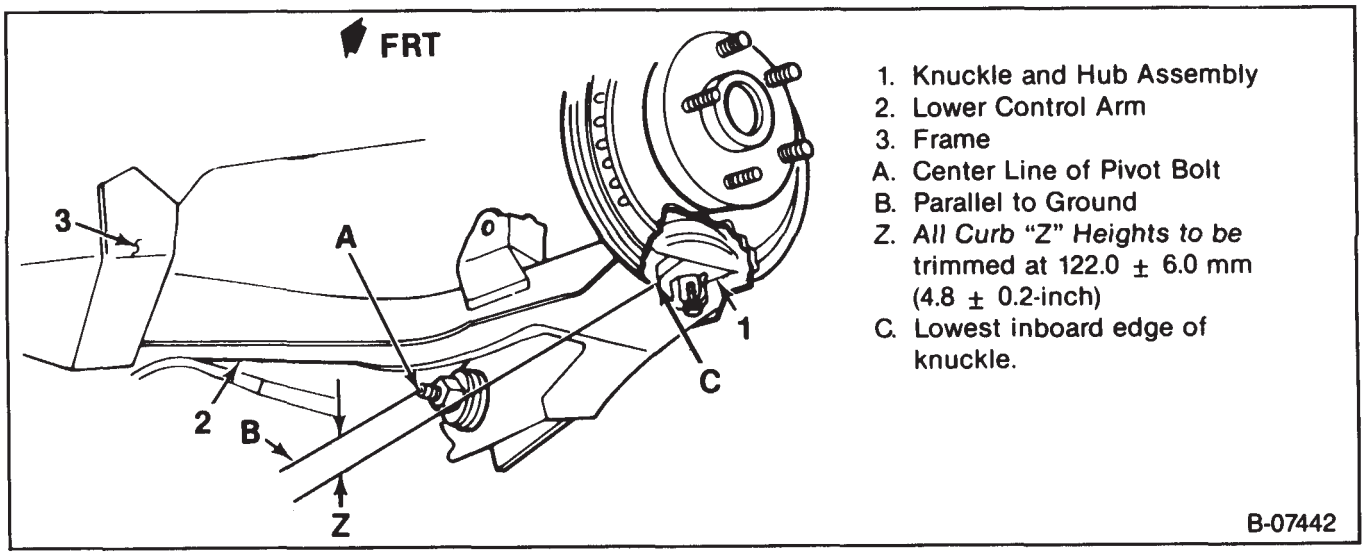

Figure 5—T Models - "Z" Height

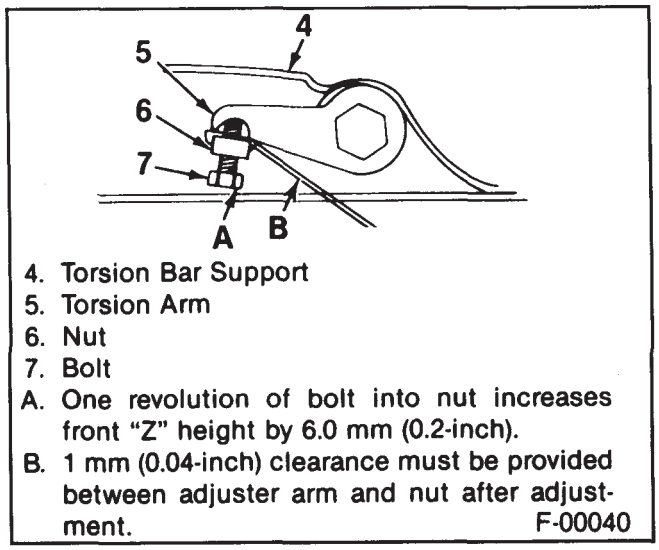

Figure 6—T Models - "Z" Trim Height Adjustment

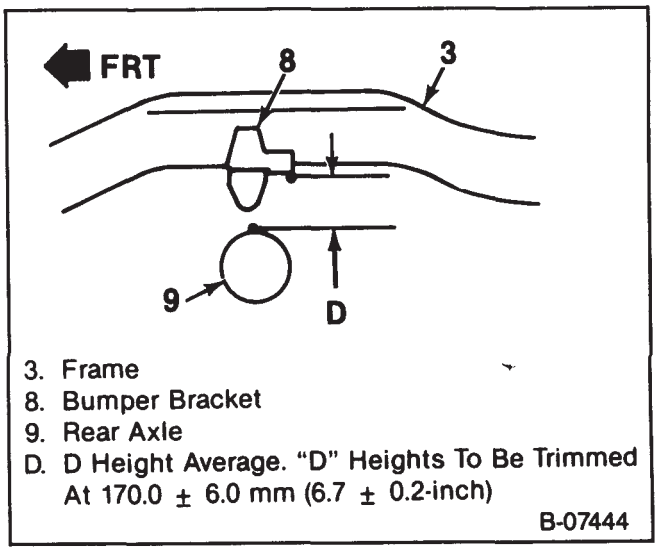

Figure 7—S/T Models — D Height

SPECIFICATIONS

TO ALIGN (A)	SERVICE CHECKING	SERVICE SETTING
CASTER	+ 2.0° ± 1.0° (C)	+ 2.0° ± 0.50° (B)
CAMBER	+ 0.8° ± 0.80° (C)	+ 0.8° ± 0.50° (B)
TOE-IN (DEGREES-PER WHEEL)	+ 0.15° ± 0.10° (D)	+ 0.15° ± 0.05° (D)

NOTE: Vehicle must be jounced three times before checking alignment to eliminate false geometry readings.

(A) Front suspension (Z) dimension and rear suspension (D) dimension are held as indicated in "Trim Height Specifications." Front end alignment specifications are indicated on this chart.
(B) Left and right side to be equal within 0.50 degree.
(C) Left and right side to be equal within 1.0 degree.
(D) Toe-in-left and right side to be set separately per wheel and steering wheel must be held in straight ahead position within ± 5.0 degree.

SECTION 3B1

POWER STEERING

NOTICE: When fasteners are removed, always reinstall them at the same location from which they were removed. If a fastener needs to be replaced, use the correct part number fastener for that application. If the correct part number fastener is not available, a fastener of equal size and strength (or stronger) may be used. Fasteners that are not reused, and those requiring thread locking compound will be called out. The correct torque value must be used when installing fasteners that require it. If the above conditions are not followed, parts or system damage could result.

NOTICE: When adding fluid or making a complete fluid change, always use GM Part No. 1050017 (or equivalent meeting GM Spec. No. 9985010) power steering fluid. Failure to use the proper fluid will cause hose and seal damage and fluid leaks.

CONTENTS

SUBJECT	PAGE
General Description	3B1- 1
Power Steering Gear	3B1- 1
Hydraulic Pumps	3B1- 1
Diagnosis of Power Steering System	3B1- 2
Locating Oil Leaks	3B1- 5
Power Steering System Test	3B1- 5
On-Vehicle Service	3B1- 7
Maintenance	3B1- 7
Fluid Level	3B1- 7
Bleeding the Power Steering System	3B1- 7
Flushing the Power Steering System	3B1- 8
Steering Gear Replacement	3B1- 8
Pitman Shaft Seal Replacement	3B1-10
Steering Gear Adjustment	3B1-11
Power Steering Pump Replacement	3B1-12
Power Steering Hoses	3B1-13
Specifications	3B1-16
Special Tools	3B1-17

GENERAL DESCRIPTION

The hydraulic power steering system consists of a pump, an oil reservoir, a steering gear, a pressure hose, and a return hose.

POWER STEERING GEAR

The power steering gear has a recirculating ball system which acts as a rolling thread between the worm shaft and the rack piston. The worm shaft is supported by a thrust bearing preload and two conical thrust races at the lower end, and a bearing assembly in the adjuster plug at the upper end. When the worm shaft is turned right, the rack piston moves up in gear. Turning the worm shaft left moves the rack piston down in gear. The rack piston teeth mesh with the sector, which is part of the pitman shaft. Turning the worm shaft turns the pitman shaft, which turns the wheels through the steering linkage.

The control valve in the steering gear directs the power steering fluid to either side of the rack piston. The rack piston converts the hydraulic pressure into a mechanical force. If the steering system becomes damaged and loses hydraulic pressure, the vehicle can be controlled manually.

HYDRAULIC PUMPS

The hydraulic pump is a vane-type design. There are two types: submerged and nonsubmerged. The submerged pump has a housing and internal parts that are inside the reservoir and operate submerged in oil. The nonsubmerged pump functions the same as the sub-

merged pump except that the reservoir is separate from the housing and internal parts (figure 1).

There are two bore openings at the rear of the pump housing. The larger opening contains the cam ring, pressure plate, thrust plate, rotor and vane assembly, and end plate. The smaller opening contains the pressure line union, flow control valve, and spring. The flow control orifice is part of the pressure line union. The pressure relief valve inside the flow control valve limits the pump pressure.

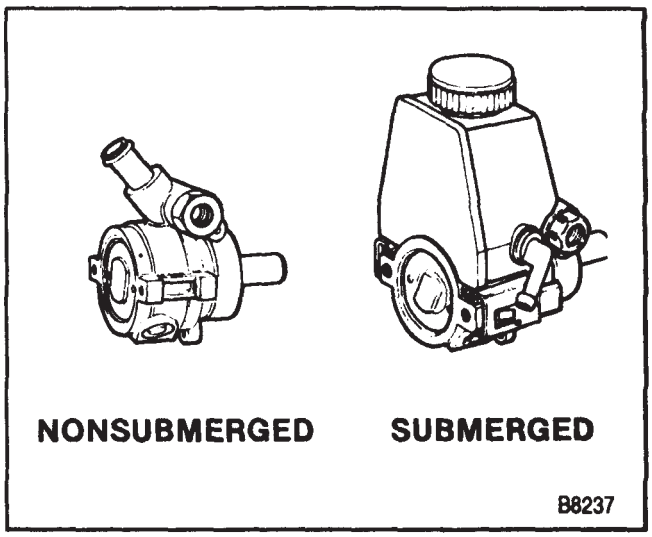

Figure 1—Power Steering Pumps

DIAGNOSIS OF POWER STEERING SYSTEM

PROBLEM	POSSIBLE CAUSE	CORRECTION
Objectionable "Hiss"	Noisy relief valve in the hydraulic pump.	There is some noise in all power steering systems. One of the most common is a hissing sound most evident at standstill parking. Hiss is a high frequency noise. The noise is present in every valve and results from high velocity fluid passing valve orifice edges. There is no relationship between the noise and performance of the steering "Hiss" may be expected when steering wheel is at end of travel or when slowly turning at standstill. Do not replace valve unless "hiss" is extremely objectionable. A replacement valve will also exhibit slight noise and is not always a cure for the objection.
Rattle Or Chuckle Noise In Steering Gear	1. Gear loose on the frame. 2. Steering linkage looseness. 3. Pressure hose touching other parts of vehicle. 4. Loose pitman arm. 5. Improper over-center adjustment. A slight rattle may occur on turns because of increased clearance off the "high point." This is normal and clearance must not be reduced below specified limits to eliminate this slight rattle.	1. Check the gear mounting bolts. Torque the bolts to specifications. 2. Check linkage pivot points for wear. Replace if necessary. 3. Adjust the hose position. Do not bend tubing by hand. 4. Torque the pitman arm bolt. 5. Adjust to specifications.

DIAGNOSIS OF POWER STEERING SYSTEM (cont'd)

PROBLEM	POSSIBLE CAUSE	CORRECTION
Excessive Wheel Kick-Back Or Loose Steering	1. Air in the system. 2. Steering gear mounting loose. 3. Steering linkage joints worn. 4. Front wheel bearings incorrectly adjusted or worn. 5. Steering gear improperly adjusted. 6. Worn or missing poppet valve (steering gear). 7. Damaged or worn steering gear.	1. Add oil to the pump reservoir and bleed. Check hose connectors for proper torque. 2. Tighten attaching bolts to specified torque. 3. Replace loose parts. 4. Adjust the bearings or replace with new parts as necessary. 5. Adjust to specifications. 6. Replace the poppet valve. 7. Disassemble and repair the steering gear as outlined in the unit repair manual.
Vehicle Leads to One Side Or The Other (Keep In Mind The Road And Wind Conditions). Test The Vehicle, Going In Both Directions, On A Flat Road.	1. Front end misaligned. 2. Unbalanced steering gear valve. If this is the cause, steering effort will be very light in direction of lead and heavy in opposite direction. 3. Steering shaft rubbing the ID of the shaft tube. 4. Steering linkage not level.	1. Adjust to specifications. 2. Replace the gear valve. 3. Align the column. 4. Adjust as required.
Momentary Increase In Effort When Turning The Wheel quickly To The Right Or Left	1. Low oil level in the pump. 2. Pump belt slipping. 3. High internal leakage (steering gear or pump)	1. Add power steering fluid as required. 2. Tighten or replace belt. 3. Refer to "Power Steering System Test" in this section.
Poor Return Of Steering	1. Tires under-inflated. 2. Lower coupling flange rubbing against the steering gear adjuster plug. 3. Steering wheel rubbing against directional signal housing. 4. Tight or frozen steering shaft bearings. 5. Steering linkage or ball joints binding. 6. Steering gear to column misalignment. 7. Tie rod pivots not centralized. 8. Lack of lubricant in the suspension ball joints and the steering linkage. 9. Stuck or plugged spool valve. 10. Rubber spacer binding in the shift tube. 11. Improper front end alignment. 12. Steering gear adjusted too lightly. 13. Kink in return hose.	1. Inflate to specified pressure. 2. Loosen the pinch bolt and assemble properly. 3. Adjust the steering jacket. 4. Replace the bearings. 5. Replace the affected parts. 6. Align the steering column. 7. Adjust tie rod ends as required to center pivots. 8. Lubricate. Refer to MAINTENANCE AND LUBRICATION (SECTION 0B). 9. Remove and clean or replace the valve. 10. Make certain the spacer is properly seated. Lubricate inside the diameter with silicone lubricant. 11. Check and adjust to specifications. 12. Adjust over-center and thrust bearing preload to specifications. 13. Replace the hose.
Steering Wheel Surges Or Jerks When Turning With Engine Running Especially During Parking	1. Low oil level in pump. 2. Loose pump belt. 3. Sticky flow control valve. 4. Insufficient pump pressure. 5. Faulty gear relief valve.	1. Add power steering fluid as required. 2. Adjust tension to specification. 3. Replace or clean the control valve. 4. Refer to "Power Steering System Test" in this section. 5. Replace the gear relief valve.

DIAGNOSIS OF POWER STEERING SYSTEM (cont'd)

PROBLEM	POSSIBLE CAUSE	CORRECTION
Hard Steering Effort in Both Directions	1. Low tire pressure. 2. Lack of lubricant in suspension or ball joints. 3. Steering gear to column misalignment. 4. Pump belt slipping. 5. Low fluid level in reservoir. 6. High internal leakage (steering gear or pump). 7. Sticky flow control valve. 8. Lower coupling flange rubbing against steering gear adjuster plug. 9. Steering gear adjusted too tight. 10. Improper front end alignment.	1. Adjust the tire pressure. 2. Lubricate and relubricate at proper intervals. Refer to MAINTENANCE AND LUBRICATION (SECTION 0B). 3. Align the steering column. 4. Tighten or replace belt. 5. Fill to proper level. Inspect lines and joints for external leakage. 6. Refer to "Power Steering System Test: in this section. 7. Replace or clean the valve. 8. Loosen the pinch bolt and assembly properly. 9. Adjust over-center and thrust bearing preload to specifications. 10. Check and adjust to specifications.
Foaming Milky Looking Power Steering Fluid, Low Level And Possible Low Pressure	Air in the fluid, and loss of fluid due to internal pump leakage causing overflow.	Check for leak and correct. Bleed system. Extremely cold temperatures will cause system aeration should the oil level be low. If oil level is correct and pump still foams, remove pump from vehicle and separate reservoir from housing. Check welsh plug and housing for cracks. If plug is loose or *housing is cracked, replace housing.*
Low Oil Pressure Due To Restriction In The Hose	1. Check for kinks in the hose. 2. Foreign object stuck in the hose.	1. Remove the kinks or replace the hose. 2. Remove the foreign object or replace the hose.
Low Oil Pressure Due To Steering Gear. Refer To "Power Steering System Test" In This Section	1. Pressure loss in cylinder due to worn piston ring or scored housing bore. 2. Leakage at the valve rings and valve body to the worn seal. 3. Leakage at the valve body or a loose fitting spool. 4. Damaged poppet valve.	1. Disassemble the steering gear as outlined in the unit repair manual. Inspect the ring and housing bore. Replace the affected parts. 2. Disassemble steering gear and replace seals. 3. Replace the valve. 4. Replace the poppet valve.
Low Oil Pressure Due To Steering Pump. Refer to "Power Steering System Test" In This Section	1. Flow control valve stuck or inoperative. 2. Pressure plate not flat against the cam ring. 3. Extreme wear of cam ring. 4. Scored pressure plate, thrust plate or rotor. 5. Vanes sticking in rotor slots. 6. Vanes not installed properly. 7. Air in oil. 8. Low oil level. 9. Pump belt slipping. 10. Damaged hoses or steering gear.	1. Replace or clean the valve. 2. Replace the pressure plate. 3. Replace and flush the system. 4. Replace parts. (If rotor, replace with rotating group), flush the system. 5. Free-up by removing burrs, varnish or dirt. 6. Install properly. Radius edge to the outside. 7. Locate source of leak and correct. *Bleed the system.* 8. Add power steering fluid as required. 9. Tighten or replace belt. 10. Replace as necessary.
Chirp Noise In Steering Pump	Pump belt slipping.	Tighten or replace belt.

DIAGNOSIS OF POWER STEERING SYSTEM (cont'd)

PROBLEM	POSSIBLE CAUSE	CORRECTION
Belt Squeal (Particularly Noticeable At full Wheel Travel And Standstill Parking)	Pump belt slipping.	Tighten or replace belt.
Growl Noise In Steering Pump	Excessive back pressure in hoses or steering gear caused by restriction.	Locate restriction and correct.
Growl Noise In Steering Pump (Particularly Noticeable At Standstill Parking)	1. Scored pressure plates, thrust plate or rotor. 2. Extreme wear of cam ring.	1. Replace parts and flush system. 2. Replace parts.
Groan Noise In Steering Pump	1. Low oil level. 2. Air in the oil. Poor pressure hose connection.	1. Add power steering fluid as required. 2. Torque the connector. Bleed the system.
Rattle Or Knock Noise In Steering Pump	1. Loose pump pulley nut. 2. Pump vanes sticking in rotor slots. 3. Pressure hose touching other parts of vehicle.	1. Torque nut. 2. Free up by removing burrs, varnish or dirt. 3. Adjust hose position.
Swish Noise In Steering Pump	Faulty flow control valve.	Replace part.
Whine Noise In Steering Pump	Pump shaft bearing scored	Replace the housing and shaft. Flush the system.
		D0096

LOCATING OIL LEAKS

1. With the vehicle's engine off, wipe the complete power steering system dry (gear, pump, hoses, and connections).
2. Check the oil level in the pump's reservoir and adjust as directed. Refer to "Fluid Level Adjustment" in this section.
3. Start the engine and turn the steering wheel from stop to stop several times. Do not hold the wheel against the stops as this may damage the pump.
4. Locate the exact area of the leak (figure 2).
   A. Return Tube Fitting—Tighten hose clamp if loose. If the fitting is deformed, replace it, apply Loctite 75559 solvent and Loctite 290 adhesive or equivalent to the tube-housing connection.
   B. Pressure Line Fitting—Torque the fitting to 27 N·m (20 ft. lbs.). If leakage persists, replace the seal.
   C. Ball Seat Leak—Seat the ball in the housing with a blunt punch. Following the manufacturer's directions, apply Loctite 75559 solvent and Loctite 290 adhesive or equivalent to the area.
   D. Drive shaft Seal—Replace the drive shaft seal. Make certain that the drive shaft is clean and free of pitting in the seal area.
   E. Housing Plug Seal—Seat the plug in the housing. Following manufacturer's directions apply Loctite 75559 solvent and Loctite 290 adhesive or equivalent, to plug-housing area.
   F. Housing Seal—Replace the seal.
   G. Side Cover Leak—Torque side cover bolts to 60 N·m (45 ft. lbs.). Replace the side cover seal if the leakage persists.
   H. Adjuster Plug Seal—Replace the adjuster plug seals.
   I. Pressure Line Fitting—Torque the hose fitting nut to 27 N·m (20 ft. lbs.). If leakage persists, replace the seal.
   J. Pitman Shaft Seals—Replace the seals.
   K. Top Cover Seal—Replace the seal.

POWER STEERING SYSTEM TEST

TEST PROCEDURE (Figure 3)

Tools Required:
J 5176-D Power Steering Gage
J 5421-02 Thermometer

The power steering system test is a method used to identify and isolate hydraulic circuit difficulties. Prior to performing this test, the following inspection and corrections, if necessary, must be made.

Inspect

- Pump reservoir for proper fluid level.
- Pump belt for proper tension.
- Pump drive pulley condition.

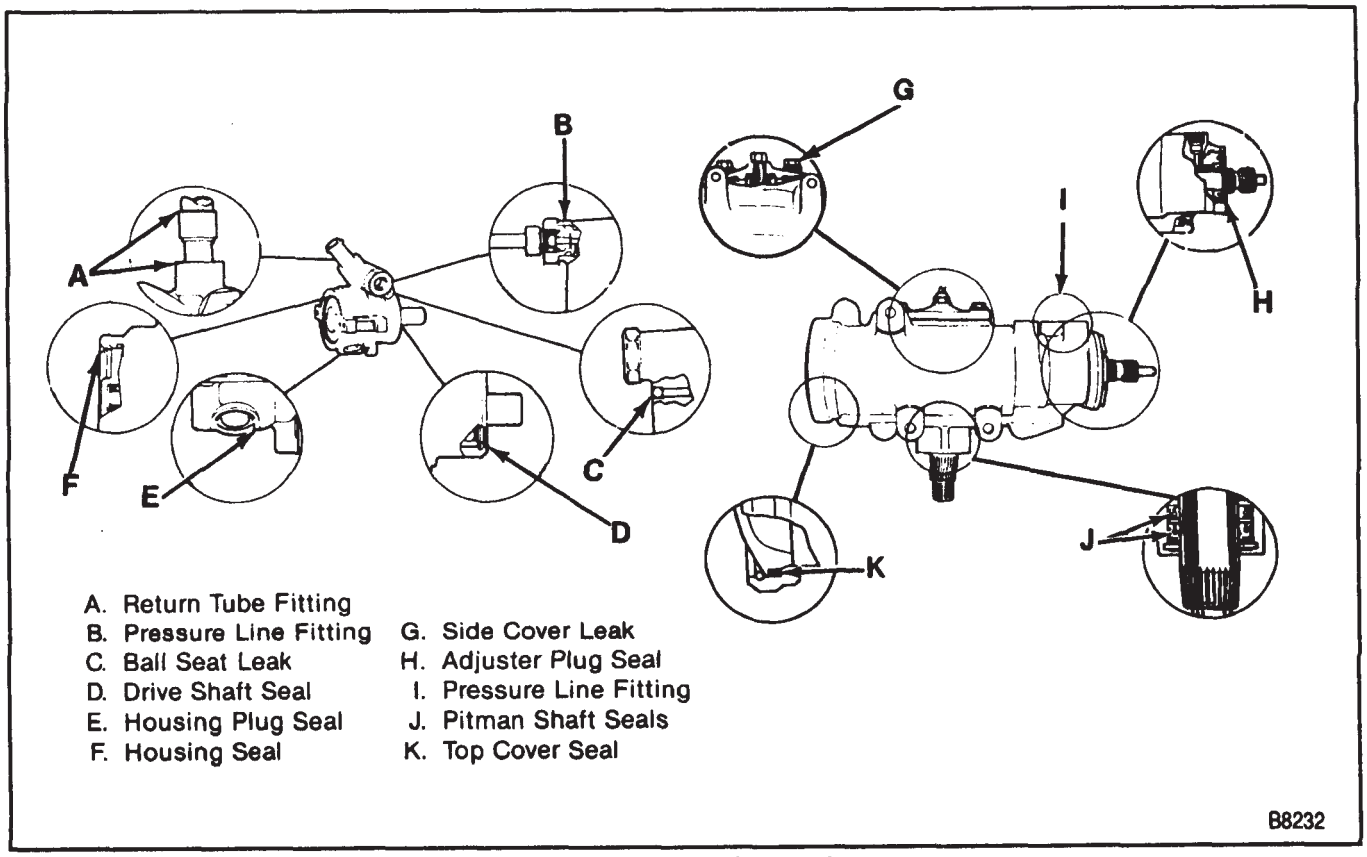

Figure 2—Fluid Leak Locations

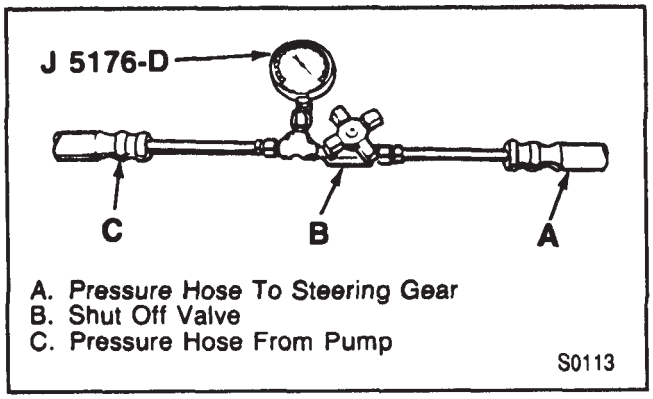

Figure 3—Checking Power Steering Pressure

Important

- All tests are made with the engine idling at normal operating temperature. Check the idle adjustment and if necessary adjust the engine idle speed to the correct specification. Refer to 1992 Fuel and Emissions Manual.

1. Place a container under the steering gear or pump to catch the fluid when disconnecting or connecting the hoses.
2. With the engine NOT running, disconnect the pressure hose at the steering gear or power steering pump and install J 5176-D to both hoses. The gage must be between the shutoff valve and pump. Open the shutoff valve.
3. Remove the filler cap from the pump reservoir and check the fluid level. Fill the pump reservoir, with power steering fluid, to the full mark on the dipstick. Start the engine and, momentarily holding steering wheel against stop, check the connections at J 5176-D for leakage.
4. Bleed the system. Refer to "Bleeding the Power Steering System."
5. Insert thermometer J 5421-02 in the reservoir filler opening. Move the steering wheel from stop to stop several times until the thermometer indicates that the hydraulic fluid in the reservoir has reached a temperature of 65° to 77°C (150° to 170°F).

Important

- To prevent scrubbing flat spots on the tires, do not turn the steering wheel more than five times without rolling the vehicle to change the tire-to-floor contact area.

6. Start the engine and check the pump's fluid level. Add power steering fluid if required. When the engine is at normal operating temperature, the initial pressure read on the gage (valve open) should be in the 550-860 kPa (80-125 psi) range. Should this pressure be in excess of 1380 kPa (200 psi), check the hoses for restrictions and the poppet valve for proper assembly.

NOTICE: Do not leave valve fully closed for more than 5 seconds as the pump could be damaged internally.

7. Fully close the gate valve 3 times. Record the highest pressures attained each time.
   - If the pressures recorded are within 7585-8274 kPa (1100-1200 psi), and the range of readings within 345 kPa (50 psi), the pump is functioning within its specifications.
   - If the pressures recorded are high, but do not repeat within 345 kPa (50 psi), the flow controlling valve is sticking. Remove the valve, clean it an remove any burrs using crocus cloth or fine hone. If the system contains some dirt, flush it. If it is exceptionally dirty, both the pump and gear must be completely disassembled, cleaned, flushed, and reassembled before further usage.
   - If the pressures recorded are constant but more than 690 kPa (100 psi), below 7585 kPa (1100 psi), replace the flow control valve and recheck. If the pressures are still low, replace the rotating group in the pump.
8. If the pump checks within specifications, leave the valve open and turn (or have turned) the steering wheel into both corners. Record the highest pressures and compare with the maximum pump pressure recorded. If this pressure cannot be built in either (or one) side of the gear, the gear is leaking internally and must be disassembled and repaired.
9. Shut the engine off, remove the testing gage, reconnect the pressure hose, check the fluid level and/or make the needed repairs.
10. If the problem still exists, the steering an front suspension must be thoroughly examined. Refer to "Diagnosis of Power Steering System."

ON-VEHICLE SERVICE

MAINTENANCE

Keep the hydraulic system clean. At regular intervals, check the pump steering fluid level in the reservoir and add fluid when required. Refer to MAINTENANCE AND LUBRICATION (SECTION 0B) in this manual for type of fluid to be used and intervals for filling.

If the system contains some dirt, flush it as detailed later in this section. If it is exceptionally dirty, both the pump and the gear must be completely disassembled before further usage.

All tubes, hoses, and fittings should be inspected for leakage at regular intervals. Fittings must be tight. Make sure the clips, clamps, and supporting tubes and hoses are in place and properly secured.

Inspect the hoses with the wheels in the straight-ahead position, then turn the wheels fully to the left and right, while observing the movement of the hoses. Correct any hose contact with other parts of the vehicle that could cause chafing or wear.

Power steering hoses and lines should not be twisted, kinked, or tightly bent. The hoses should have sufficient natural curvature in the routing to absorb movement and hose shortening during vehicle operation.

Air in the system will cause spongy action and noisy operation. When a hose is disconnected or when fluid is lost, bleed the system after refilling. Refer to "Bleeding the Power Steering System" in this section.

FLUID LEVEL

1. Run the engine until the power steering fluid reaches normal operating temperature, about 80°C (170°F), then shut the engine off.
2. Remove the reservoir cap and check the fluid level on the dipstick. On models equipped with a remote reservoir, the fluid level should be about 12.7 to 25.4 mm (1/2 to 1 inch) from the top when the wheels are in full left turn position.
3. If the fluid level is low, add power steering fluid as specified in MAINTENANCE AND LUBRICATION (SECTION 0B) to the proper level and install the reservoir cap.
4. When checking the fluid level after the steering system has been serviced, bleed the air from the system. Refer to "Bleeding the Power Steering System" in this section.

BLEEDING THE POWER STEERING SYSTEM

When a power steering pump or gear has been installed, or an oil line has been disconnected, the air that has entered the system must be bled out before the vehicle is operated. If air is allowed to remain in the power steering fluid system, noisy and unsatisfactory operation of the system may result.

BLEEDING PROCEDURE

1. Fill the pump fluid reservoir to the proper level and let the fluid settle for at least two minutes.
2. Start the engine and let it run for a few seconds. Then turn the engine off.
3. Add fluid if necessary.
4. Repeat the above procedure until the fluid level remains constant after running the engine.
5. Raise the front end of the vehicle so that the wheels are off the ground.
6. Start the engine. Slowly turn the steering wheel right and left, lightly contacting the wheel stops.
7. Add power steering fluid if necessary.
8. Lower the vehicle and turn the steering wheel slowly from stop to stop.
9. Stop the engine. Check the fluid level and refill as required.
10. If the fluid is extremely foamy, allow the vehicle to stand a few minutes and repeat the above procedure.

Inspect

- Belt for tightness.
- Pulley for looseness or damage. The pulley should not wobble with the engine running.
- Hoses so they are not touching any other parts of the vehicle.
- Fluid level and fill to the proper level.

FLUSHING THE POWER STEERING SYSTEM

1. Raise the front end of the vehicle off the ground until the wheels are free to turn.
2. Remove the fluid return line at the pump inlet connector and plug the connector port on the pump. Position the line toward a large container to catch the draining fluid.
3. While an assistant is filling the reservoir with new power steering fluid, run the engine at idle. Turn the steering wheel from stop to stop. DO NOT contact wheel stops or hold the wheel in a corner or fluid will stop and the pump will be in pressure relief mode. A sudden overflow from the reservoir may develop if the wheel is held at a stop.
4. Install all the lines and hoses. Fill the system with new power steering fluid and bleed the system as described in "Bleeding The Power Steering System." Operate the engine for about 15 minutes. Remove the pump return line at the pump inlet and plug the connection on the pump. While refilling the reservoir, check the draining fluid for contamination. If foreign material is still evident, replace all lines, disassemble and clean or replace the power steering system components. Do not re-use any drained power steering fluid.

STEERING GEAR REPLACEMENT

Remove or Disconnect (Figures 4, 5, 18, 20, and 21)

- Place a drain pan below the steering gear.

1. Return and feed hoses (53 and 54) from the steering gear (12).
   - Cap or tape the ends of the hoses and gear fittings to prevent the entrance of dirt.

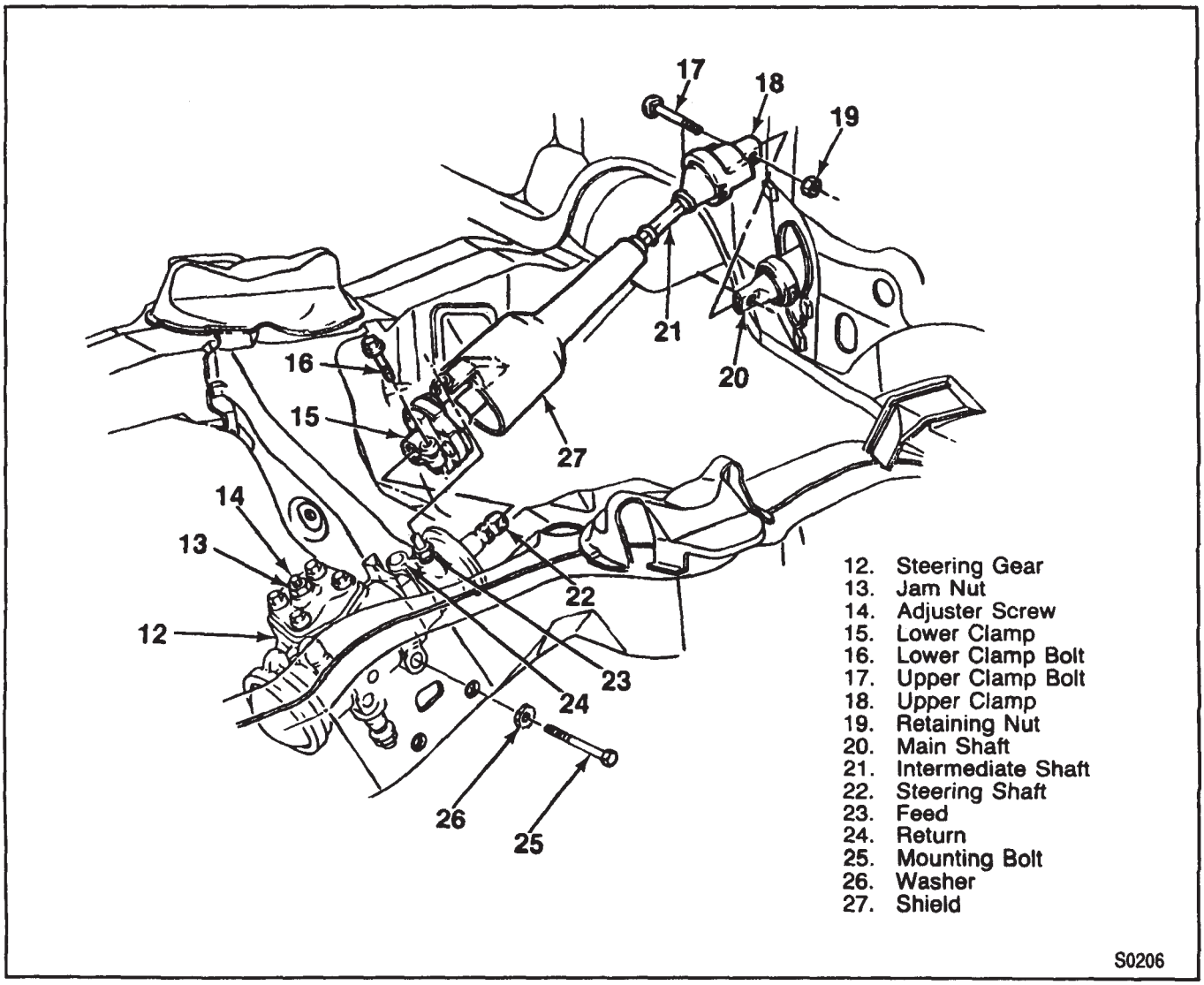

Figure 4—Steering Gear Assembly

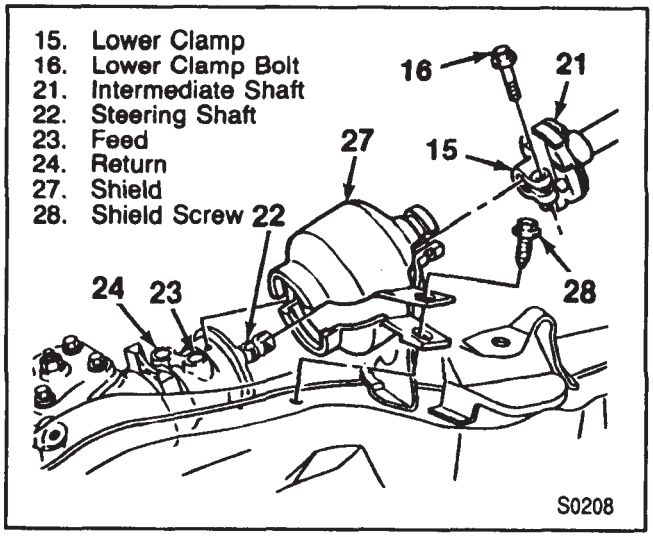

Figure 5—Steering Gear Shield—T Model

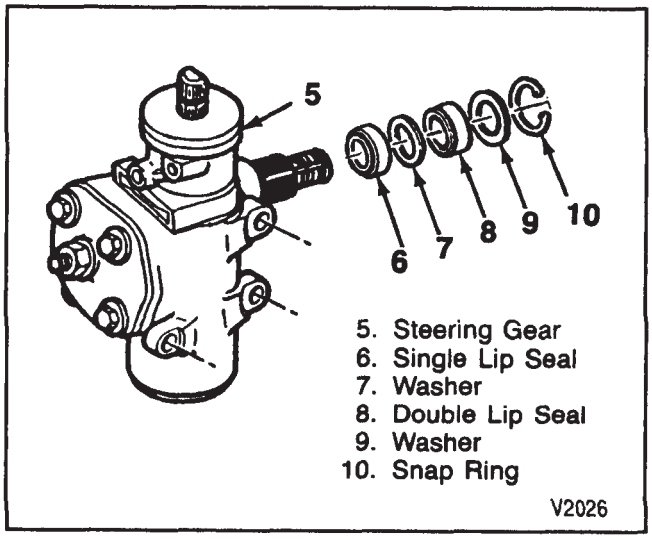

Figure 6—Pitman Seal Assembly

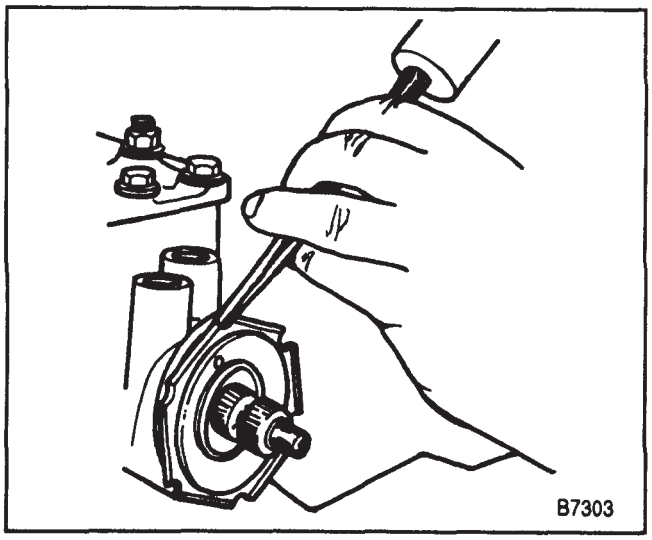

Figure 7—Loosening the Ajuster Plug Nut

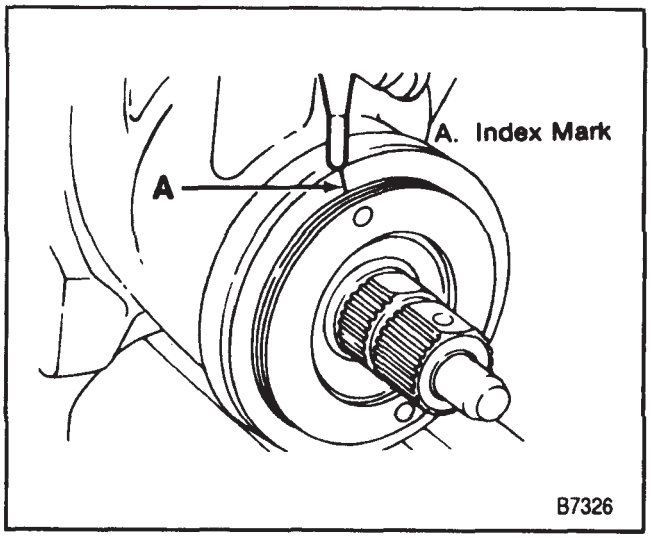

Figure 8—Alignment Marking the Adjuster Plug Hole with the Housing

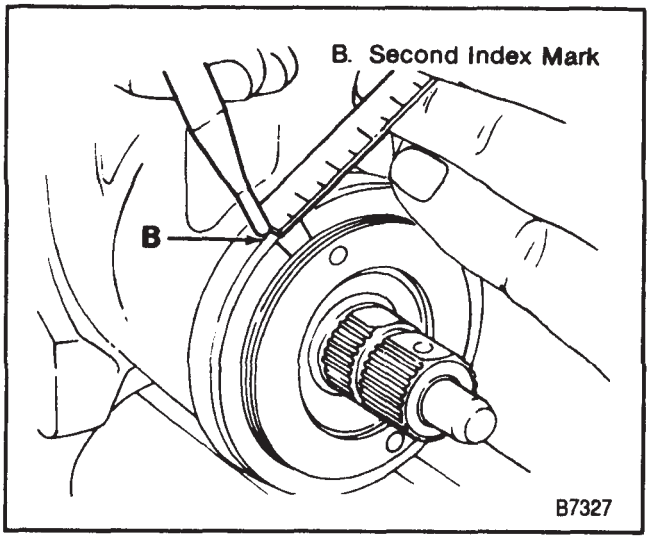

Figure 9—Remarking the Housing

2. Shield (27). On the T Model remove the shield screw (28) before removing the shield (27).
3. Lower clamp bolt (16).
   - Draw alignment marks on the lower clamp (15) and the steering shaft (22) before removing the lower clamp (15).
4. Lower clamp (15) from the steering shaft (22).
5. Pitman arm. Refer to STEERING LINKAGE (SECTION 3B3).
6. Mounting bolts (25) and washers (26).
7. Steering gear (12).

Install or Connect (Figures 4 and 5)

NOTICE: For steps 2 and 7 see "Notice" on page 3B1-1.

1. Steering gear (12).
2. Washers (26) and mounting bolts (25).

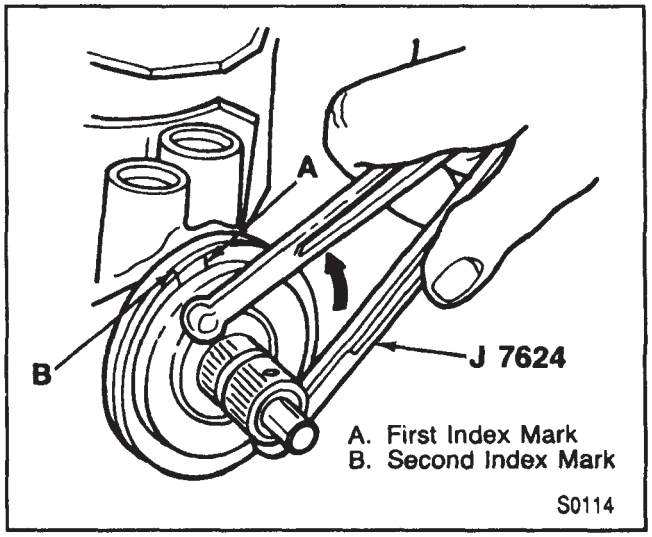

Figure 10—Aligning the Adjuster to the Second Mark

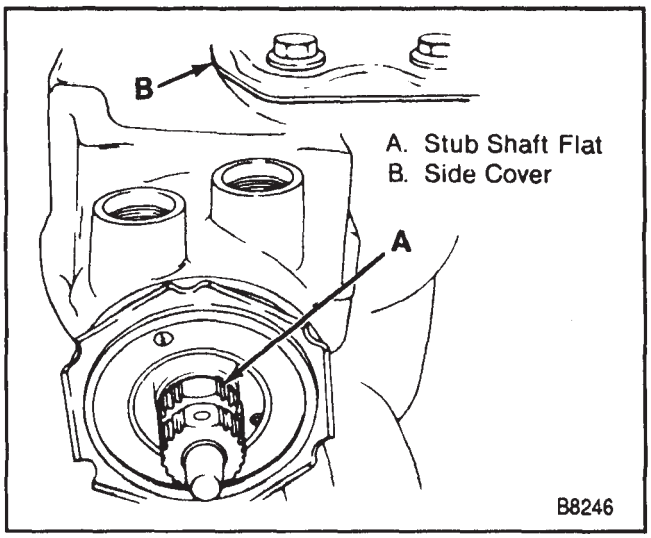

Figure 11—Aligning the Stub Shaft

Tighten

- Mounting bolts (25) to 75 N·m (55 ft. lbs.).

3. Pitman arm. Refer to STEERING LINKAGE (SECTION 3B3).
4. Lower clamp (15) to the steering shaft (22).
   - Make sure the alignment marks line up.
5. Lower clamp bolt (16).
6. Shield (27). On the T model, install the screw (28) after installing the shield (27).
7. Return and feed horses (53 and 54).

Tighten

- Hose clamps to 2.0 N·m (18 in. lbs.).

8. Bleed the system. Refer to "Bleeding the Power Steering System" in this section.

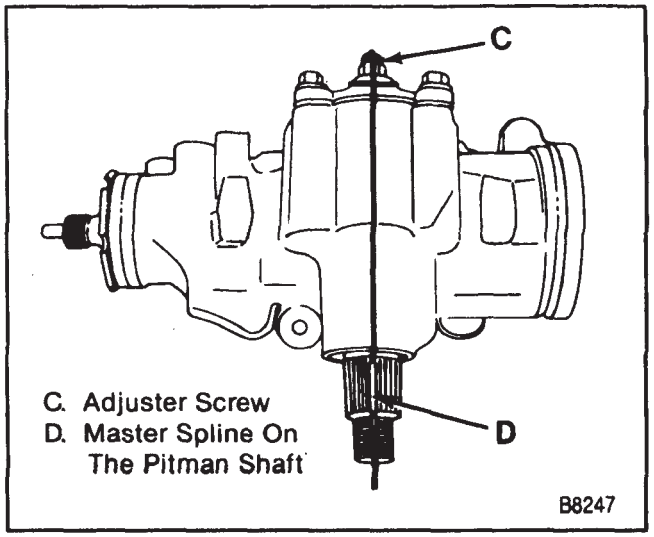

Figure 12—Aligning the Pitman Shaft Master Spline

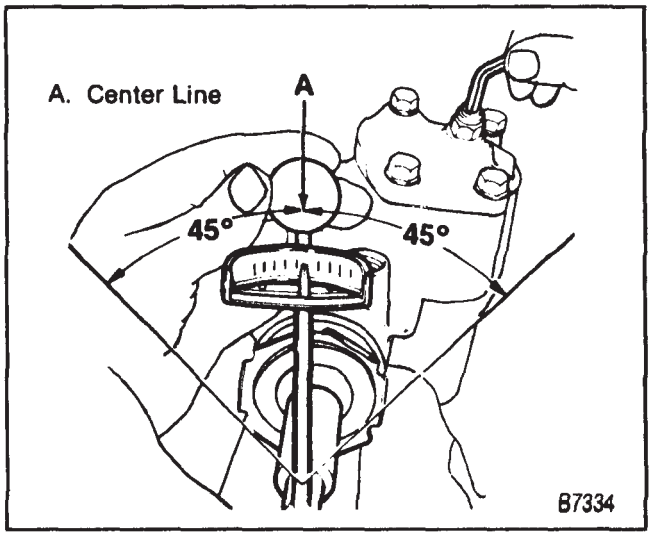

Figure 13—Checking Over-Center Rotational Torque

PITMAN SHAFT SEAL REPLACEMENT

Remove or Disconnect (Figure 6)

Tools Required:
J 4245 Internal Snap Ring Pliers

- Mark the position of the pitman arm to the pitman shaft.

1. Pitman arm. Refer to STEERING LINKAGE (SECTION 3B3).
2. Snap ring (10), use J 4245.
   - Position a drain pan under the steering gear.
3. Start the engine.
   - Turn the steering wheel from stop to stop bouncing the wheel off the stops.
4. Washers (7 and 9), single lip seal (6) and double lip seal (8).
5. Stop the engine.

Inspect

- Pitman shaft seal surfaces for roughness or pitting. If pitted, replace the shaft.
- Housing for burrs. Remove the burrs before installing the new seals.

Clean

- Pitman shaft and seal areas using a crocus cloth.

Install or Connect (Figure 6)

Tools Required:
J 4245 Internal Snap Ring Pliers
J 6219 Seal Installer

- Lubricate the new seals with power steering fluid.
- Apply a single layer of tape to the pitman arm shaft to avoid damaging the seals.

1. Single lip seal (6) and washer (7), using J 6219.
   - Install far enough to provide clearance for the remaining seal, washer, and retaining ring. DO NOT allow the seal to bottom in the bore.
2. Double lip seal (8) and washer (9), use J 6219.
3. Snap ring (10), use J 4245.
4. Center the steering gear.
   - Turn the wheel until it stops.
   - Turn the wheel in the opposite direction until it stops, while counting the number of turns.
   - Turn the wheel back 1/2 the number of turns in the previous step.

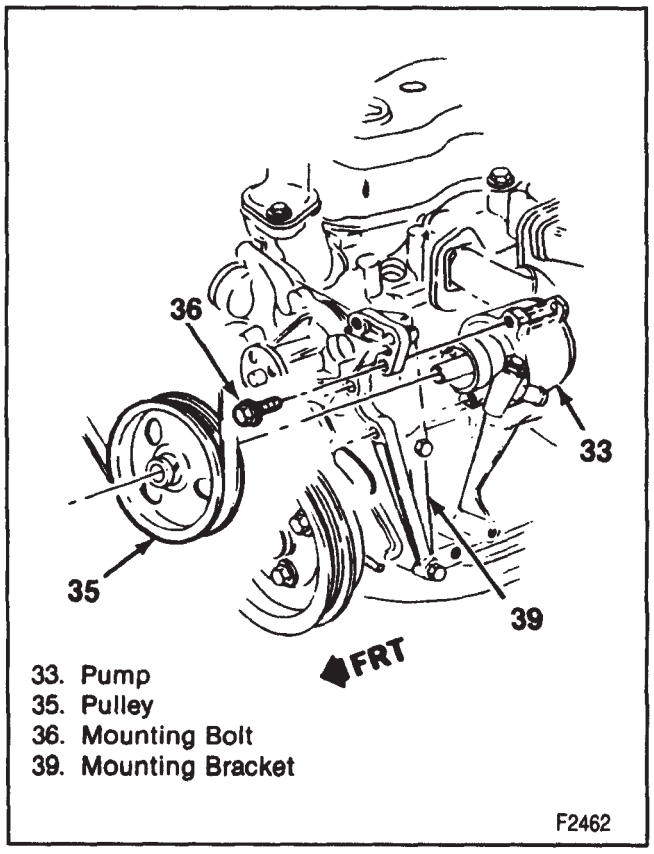

Figure 14—Power Steering Pump Mounting (2.5L Engine)

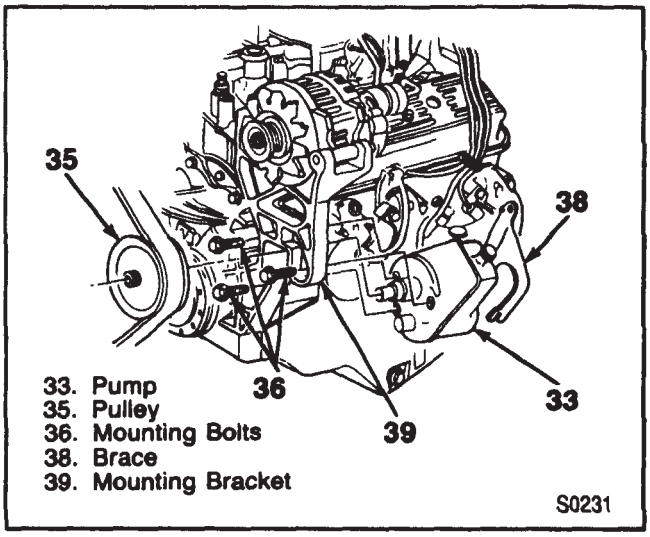

Figure 15—Power Steering Pump Mounting (4.3L Engine)

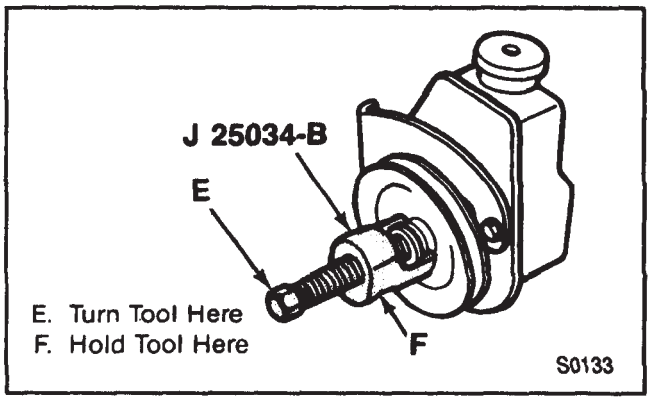

Figure 16—Removing the Pump Pulley

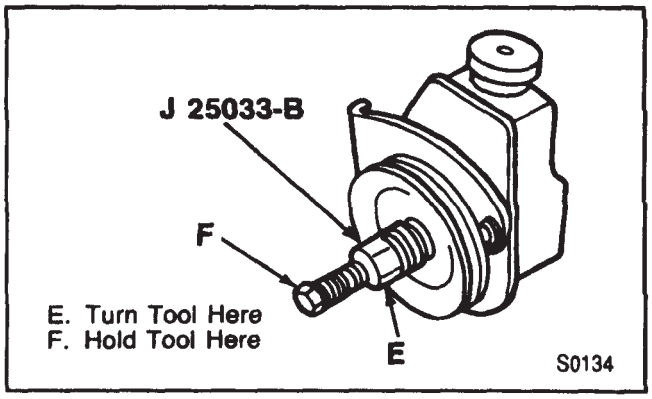

Figure 17—Installing the Pump Pulley

5. Pitman arm. Refer to STEERING LINKAGE (SECTION 3B3).
6. Bleed the system. Refer to "Bleeding the Power Steering System" in this section.

STEERING GEAR ADJUSTMENT

Steering gear adjustments are made only as corrections and not as periodic adjustments. Before any adjustments are made, refer to "Diagnosis of Power Steering System" to review the possible steering system problems. Adjusting the steering gear in the vehi-

cle is NOT recommended. Remove the gear from the vehicle and mount in a vise.

The steering gear requires two adjustments: the worm thrust bearing preload and the pitman shaft over-center preload adjustment. Adjust the worm thrust bearing preload first, then the pitman shaft over-center preload adjustment.

WORM BEARING PRELOAD ADJUSTMENT

Tools Required:
J-7624 Adjustable Spanner Wrench

1. Remove the adjuster plug nut (figure 7).
   - To aid in the removal use a hammer and a brass punch.
2. Turn the adjuster plug in, using J 7624.
   - Bottom the plug and thrust bearing in the housing.

Tighten

- Adjuster plug to 27 N·m (20 ft. lbs.).

3. Place an index mark on the housing even with one of the holes in the adjuster plug (figure 8).
4. Measure back (counterclockwise) 13 mm (0.50 inch) from the index mark and put a second mark on the housing (figure 9).
5. Rotate the adjuster plug back (counterclockwise) until the hole in the plug is aligned with the second mark on the housing (figure 10).
6. Install the adjuster plug nut.
   - Be sure the adjuster plug does not turn while tightening the nut.

OVER CENTER PRELOAD ADJUSTMENT

1. Rotate the stub shaft from stop to stop and count the number of turns.
2. Starting at either stop, turn the stub shaft back 2/3 the total number of turns. This is the "center' of the gear.
   - When the gear is centered, the flat on the stub shaft should face upward an be parallel with the side cover (figure 11) and the master spline on the pitman shaft should be in line with the adjuster screw (79) (figure 12).
3. Turn the pitman shaft adjuster screw counterclockwise until extended, then turn back in one full turn.
4. Place the torque wrench, in the vertical position, on the stub shaft. Rotate the torque wrench 45 degrees each side of the center and record the highest drag torque measured on or near center (figure 13).
5. Turn the adjuster in until the torque required to turn the stub shaft is 0.6 to 1.2 N·m (6.0 to 10.0 in. lbs.) greater than the reading in step 4.

Tighten

- Adjuster jam nut to 27 N·m (20 ft. lbs.).

POWER STEERING PUMP REPLACEMENT

Remove or Disconnect (Figures 14, 15, and 16)

Tools Required:
J 25034-B Pulley Remover

- Place a drain pan below the pump.

1. Hoses. Cap the hoses.
2. Loosen the tensioner assembly.
3. Belt.
4. V6—Rear brace nuts.
5. V6—Rear brace (38).
6. Pulley.
   - Install J 25034-B. Be sure the pilot bolt bottoms in the pump shaft by turning the nut to the top of the pilot bolt.
   - Hold the pilot bolt.
   - Turn the nut counterclockwise.
7. Mounting bolts (36).
8. Pump (33).

Install or Connect (Figures 14, 15, and 17)

Tools Required:
J 25033-B Pulley Installer

NOTICE: For steps 2, 4, and 5, see "Notice" on page 3B1-1 of this section.

1. Pump (33).
2. Mounting bolts (36).

Tighten

- Bolts (36) to 27 N·m (20 ft. lbs.), 2.5L Engine
- Bolts (36) to 50 N·m (36 ft. lbs.), 4.3L Engine

3. V6—Rear brace (38).
4. Rear brace nut.

Tighten

- Nut to 45 N·m (33 ft. lbs.).

5. Rear brace nut.

Tighten

- Nut to 25 N·m (18.5 ft. lbs.).

6. Pulley (35).
   - Place pulley on the end of the pump shaft.
   - Install J 25033-B. Be sure the pilot bolt bottoms in the shaft by turning the nut to the top of the pilot bolt.
   - Hold the pilot bolt.
   - Turn the nut clockwise.
7. Belt.
8. Hoses.
9. Fill and bleed the system. Refer to "Bleeding the Power Steering System" in this section.

Inspect

- Hoses for clearance.

POWER STEERING HOSES

When either a hose is reinstalled or replaced, the following points are essential:

- Route return and feed hoses (53 and 54) in the same position they were in before removal (figures 18, 19, 20, 21).
- Route return and feed hoses (53 and 54) smoothly, avoid sharp bends and kinking.
- After return and feed hoses (53 and 54) are installed, check for leaks while the system is being bled. Refer to "Bleeding the Power Steering System" in this section.

NOTICE: Do not start the engine with any power steering hose disconnected, or damage to the components could occur.

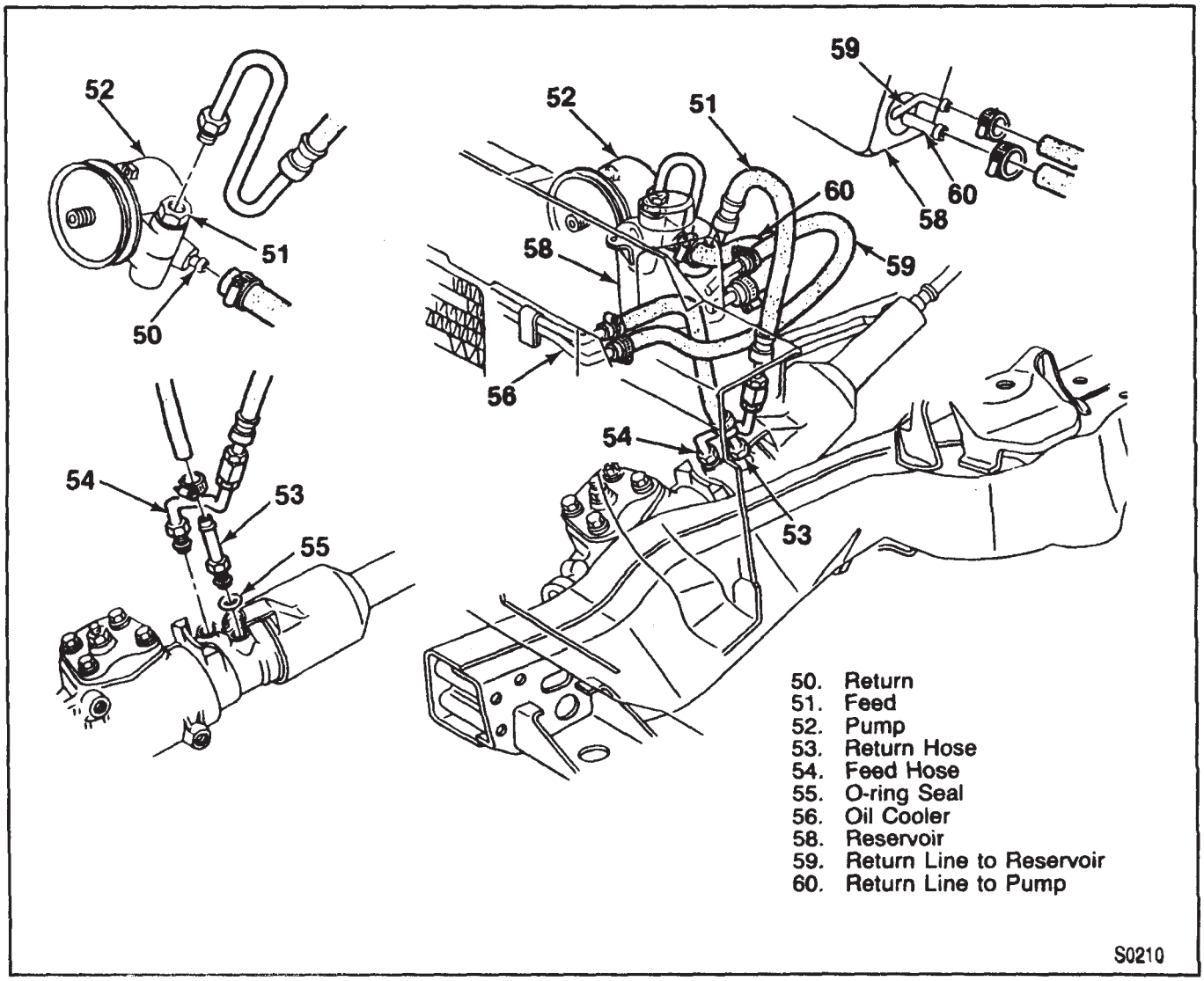

Figure 18—Hose Routing—2.5L Engine, T-Model With A/C

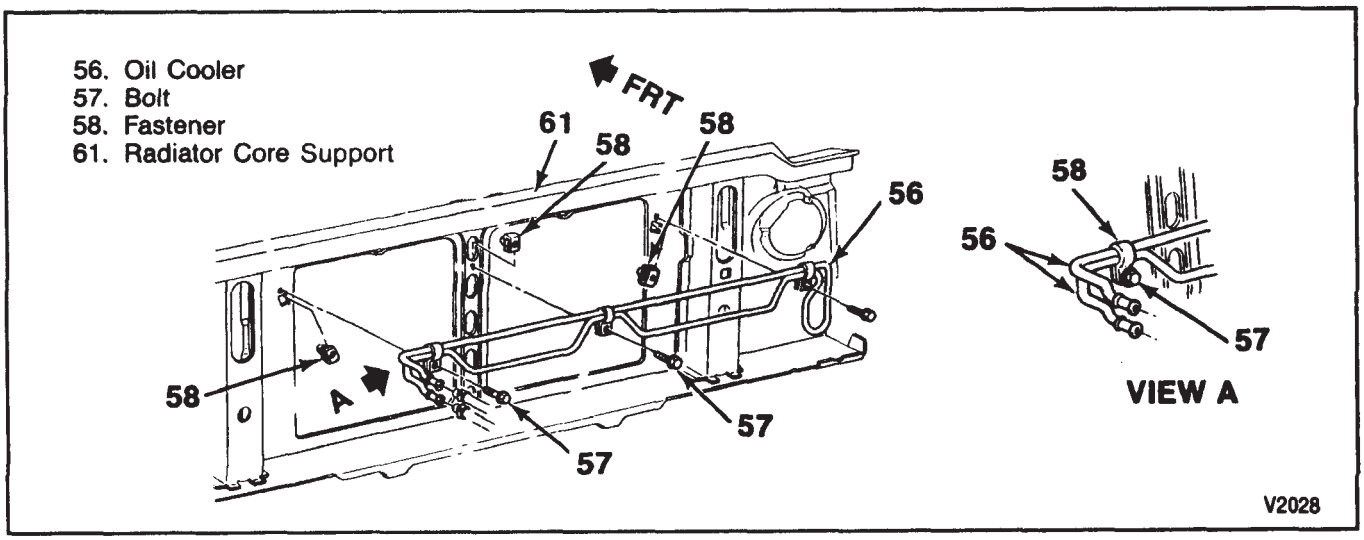

Figure 19—Power Steering Cooler—2.5L Engine

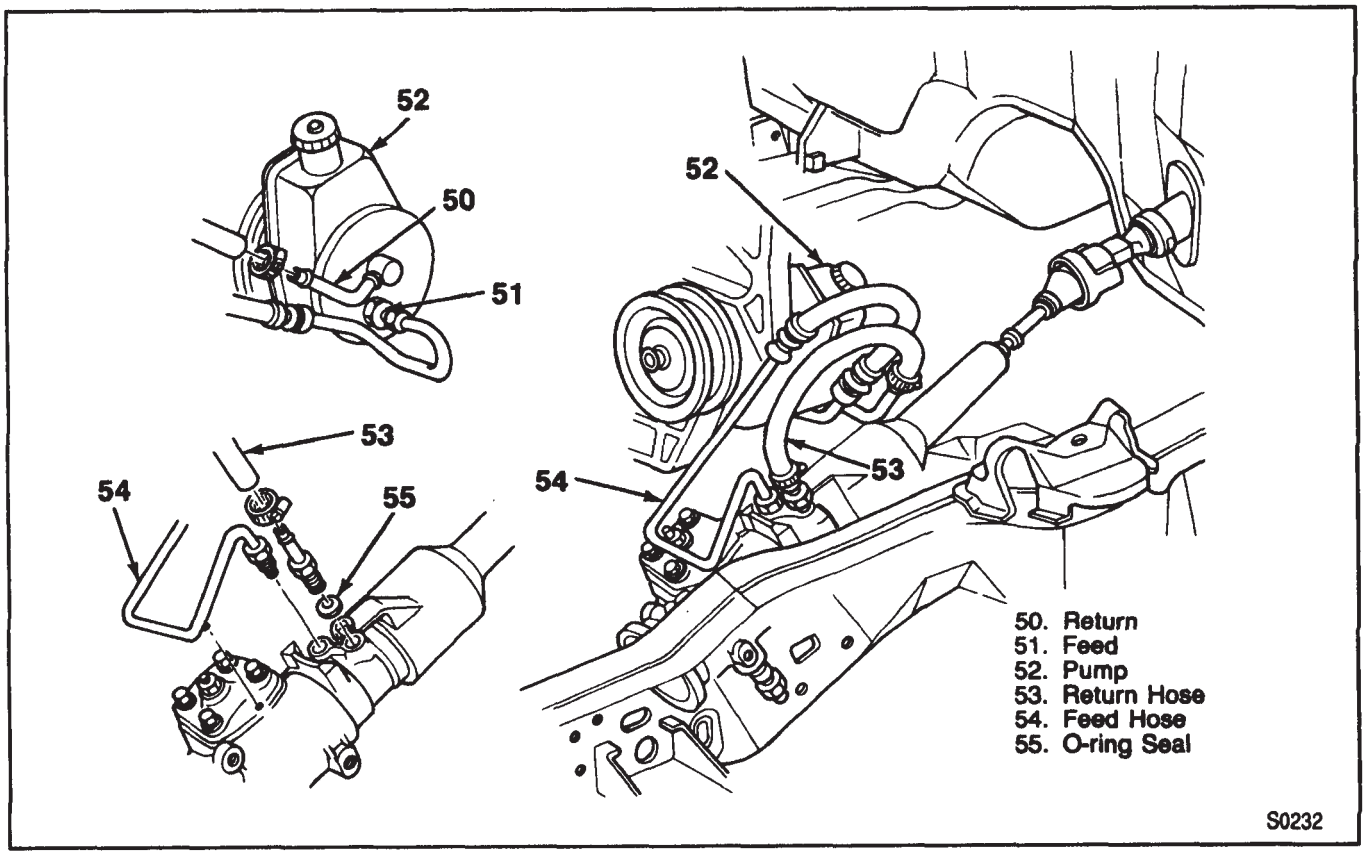

Figure 20—Hose Routing—4.3L Engine

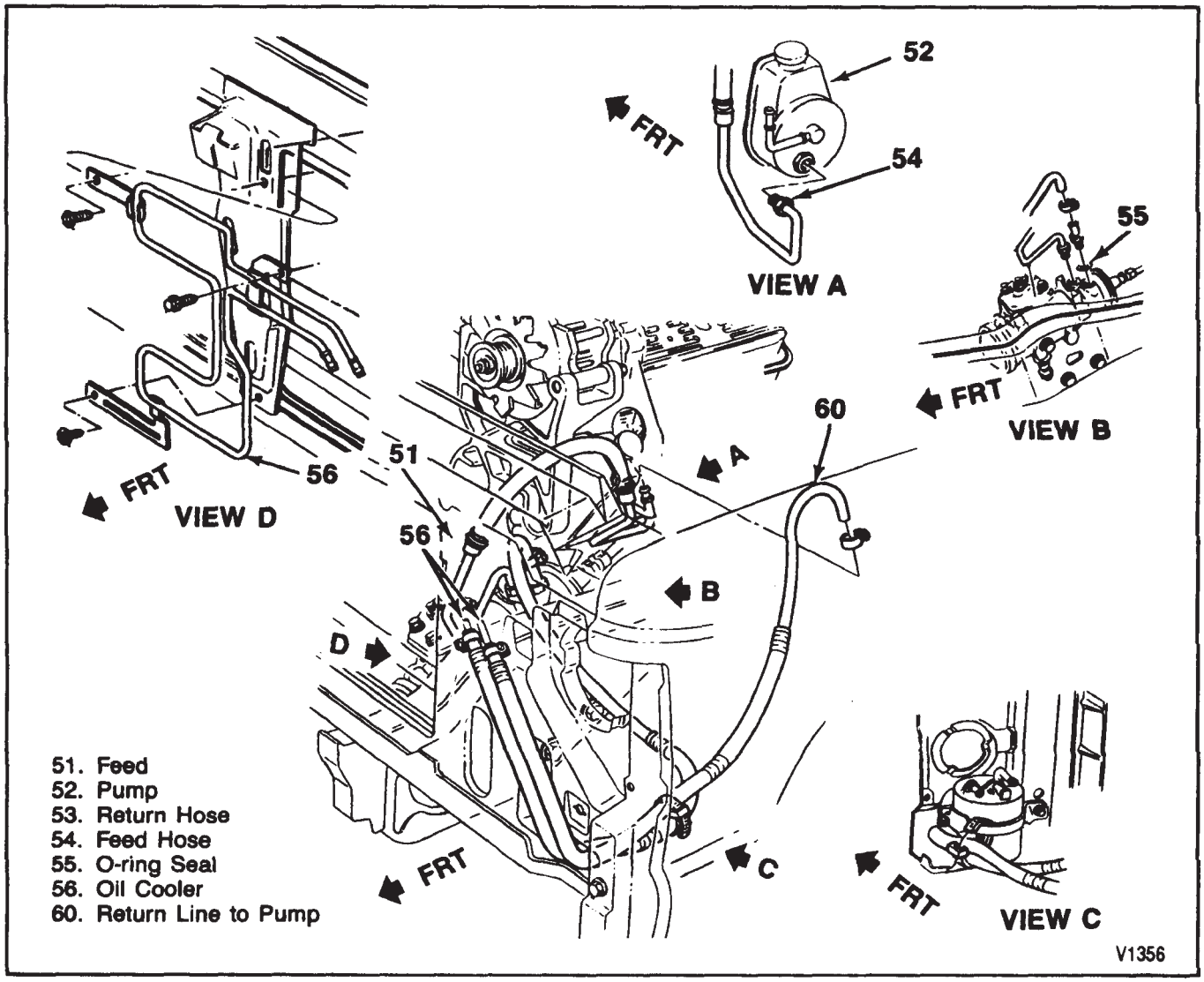

Figure 21—Hose Routing—4.3L Engine with Cooler.

SPECIFICATIONS

GENERAL SPECIFICATIONS

Lubricant

Lubricant ..... Power Steering Fluid No. 1050017 or equivalent

Adjustments

Over-Center Adjustment (new gear) ..... 0.6 to 1.2 N·m (6 to 10 in. lbs.)
Pump Belt Tension Adjustment (new belt) ..... 650 N·m (146 lbs.)
Pump Belt Tension Adjustment (used belt) ..... 300 N·m (67 lbs.)

T2011

TORQUE SPECIFICATIONS

Power Steering Pump	N·m	Ft. Lbs.
Pressure Line Fitting	27	20
Mounting Bolts (2.8 L and 4.3 L Engines)	50	36
Mounting Bolts (2.5 L Engine)	27	20
Rear Brace Nut to Pump	45	33
Rear Brace Nut to Engine	25	18.5
Steering Gear		
Gear To Frame Bolts	75	55
Side Cover Bolts	60	45
Lower Clamp Bolt (S/T)	35	26
Lower Clamp Bolt (Right Hand Drive Vehicle)	35	26
Hose Coupling	28	21

T2012

SPECIAL TOOLS

1 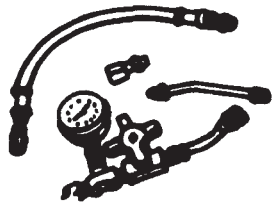 J 5176-D

2 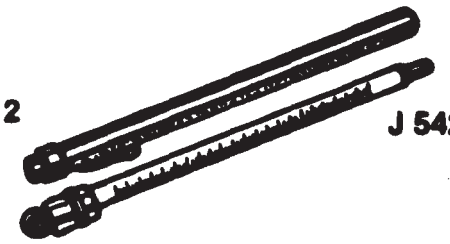 J 5421-02

3 J 4245

4 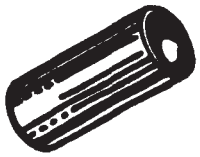 J 6219

5 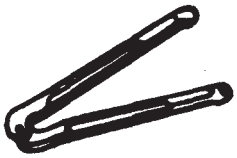 J 7624

6 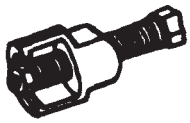 J 25034-B

7 J 25033-B

1. Power Steering Pressure Tester 0-2000 P.S.I.—Includes J 5176-5 & J 5176-20
2. Thermometer (0° to 220°F). Glass.
3. Snap Ring Pliers #23 Internal (.070" Dia. Straight Tip)
4. Pitman Shaft Oil Seal Installer
5. Adjustable Spanner Wrench
6. Power Steering Pump Pulley Remover
7. Power Steering Pump Pulley Installer

S0137

SECTION 3B2

MANUAL STEERING

NOTICE: When fasteners are removed, always reinstall them at the same location from which they were removed. If a fastener needs to be replaced, use the correct part number fastener for that application. If the correct part number fastener is not available, a fastener of equal size and strength (or stronger) may be used. Fasteners that are not reused, and those requiring thread locking compound will be called out. The correct torque value must be used when installing fasteners that require it. If the above conditions are not followed, parts or system damage could result.

CONTENTS

SUBJECT	PAGE
Description	3B2-1
Diagnosis Of Manual Steering System	3B2-2
On-Vehicle Service	3B2-3
Maintenance	3B2-3
Steering Gear Replacement	3B2-3
Pitman Shaft Seal Replacement	3B2-3
Steering Gear Adjustments	3B2-5
Specifications	3B2-7
Special Tools	3B2-8

DESCRIPTION

The steering gear is the recirculating ball nut and worm type. The worm is located on the lower end of the steering shaft. The ball nut is mounted on the worm and the steel balls act as a rolling thread between the worm and nut to provide a low friction drive between them.

Teeth on the ball nut engage teeth on the pitman shaft sector. The teeth on the ball nut are made so that a tighter fit exists between the ball nut and pitman shaft sector teeth when the front wheels are in the straight ahead position. The sector teeth are slightly tapered so that a proper preload may be obtained by moving the pitman shaft endways by means of a preload adjuster screw which extends through the gear housing side cover. The head of the preload adjuster and a selectively fitted shim fit snugly into a T-slot in the end of the pitman shaft, so that the screw also controls the end play of the shaft (figure 1).

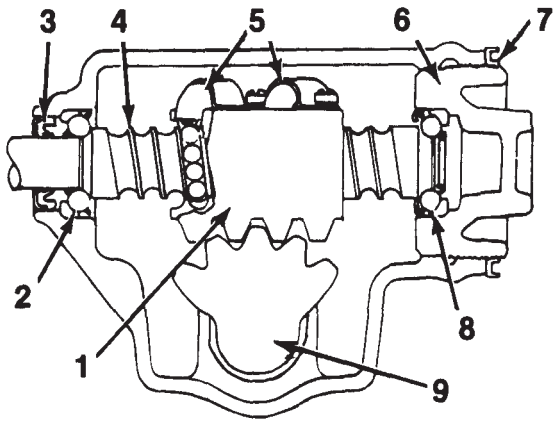

1. Ball Nut
2. Worm Bearing
3. Seal
4. Wormshaft
5. Balls and Guides
6. Adjuster Plug
7. Adjuster Nut
8. Worm Bearing (Lower)
9. Pitman Shaft Sector

S-00156

Figure 1—Manual Steering Gear

DIAGNOSIS OF MANUAL STEERING SYSTEM

PROBLEM	POSSIBLE CAUSE	CORRECTION
Rattle Or Chuckle In The Steering Gear	1. Insufficient or improper lubricant in the steering gear. 2. Pitman arm loose on the shaft or the steering gear mounting bolts loose. 3. Loose or worn steering shaft bearing. 4. Excessive over-center lash or worm thrust bearings adjusted too loose. On turns a slight rattle may occur, due to the increased lash between ball nut and pitman shaft as gear moves off the center of "high point" position. This is normal and lash must not be reduced to eliminate this slight rattle.	1. Add lubricant as required. 2. Tighten to specified torque. 3. Replace the steering shaft bearing. 4. Adjust the steering gear to specified preloads.
Poor Return Of The Steering Wheel	1. Steering column misaligned. 2. Insufficient or improper lubricant in the steering gear or front suspension. 3. Steering gear adjusted too tight. 4. Front wheel alignment incorrect (Caster).	1. Align the column. 2. Lubricate as specified. 3. Adjust over-center and thrust bearing preload to specifications. 4. Adjust to specifications.
Excessive Play Or Looseness In The Steering System	1. Front wheel bearings loosely adjusted. 2. Steering system out of alignment. 3. Worn upper ball joints. 4. Steering wheel loose on the shaft, loose pitman arm, tie rods, steering arms or steering linkage ball nuts. 5. Tires badly worn, edge of tires rounded off. 6. Excessive over-center lash. 7. Worm thrust bearings loosely adjusted.	1. Adjust bearings or replace with new parts as necessary. 2. Align caster, camber, and toe-in. 3. Check and replace ball joints if necessary. 4. Tighten to specification, replace if worn or damaged. 5. Install new tires, and check alignment. 6. Adjust over-center preload to specifications. 7. Adjust the worm thrust bearing preload to specifications.
Hard Steering — Excessive Effort Required At The Steering Wheel	1. Low or uneven tire pressure. 2. Insufficient or improper lubricant in the steering gear or front suspension. 3. Steering shaft flexible coupling misaligned. 4. Steering gear adjusted too tight. 5. Front wheel alignment incorrect.	1. Inflate to specified pressures. 2. Lubricate as specified. Relubricate at specified intervals. 3. Align the column and couplings. 4. Adjust over-center and thrust bearing preload to specifications. 5. Check the alignment and correct as necessary.

ON-VEHICLE SERVICE

MAINTENANCE

The steering gear is factory-filled with steering gear lubricant. Seasonal change of the lubricant should not be performed and the housing should not be drained. NO additional lubrication is required for the life of the steering gear.

At intervals specified in MAINTENANCE AND LUBRICATION (SEC. 0B) of this manual, the gear should be inspected for seal leakage (actual solid grease — not just oily film). If a seal is replaced or the gear is overhauled, the gear housing should be refilled with steering lubricant GM part No. 1051052 or equivalent.

NOTICE: DO NOT USE EP Chassis Lube to lubricate the gear. DO NOT OVER-FILL the gear housing, or damage may occur.

STEERING GEAR REPLACEMENT

Remove or Disconnect (Figures 2, 3, and 4)

Tools Required:
J 6632-01 Pitman Arm Remover
J 29107 Pitman Arm Puller

- Position the front wheels straight ahead.
- Note the position of the steering wheel.

1. Battery ground cable.
2. Coupling shield (40) — T Models, or shield (35) — S Models.
3. Lower clamp bolt (25).
4. Lower clamp (24) from the wormshaft (31).
5. Pitman arm nut and washer from the pitman shaft.
   - Mark the position of the pitman arm to the pitman shaft.
6. Pitman arm, using J 6632-01 or J 29107 (figure 4).
7. Mounting bolts (34) and washers (33).
8. Steering gear (20).

Install or Connect (Figures 2, 3, and 4)

NOTICE: For Steps 2, 4, 6 and 8, see "Notice" on page 3B2-1 of this section.

1. Steering gear (20) to the frame.
2. Mounting bolts (34) and washers (33).

   Tighten
   - Bolts to 75 N·m (55 ft. lbs.).
3. Intershaft lower clamp (24) to the steering gear wormshaft (31).
   - Check the position of the steering wheel.
   - Make sure that the clamp bolt hole is aligned with the groove in the wormshaft.
4. Lower clamp bolt (25).

   Tighten
   - Bolt to 41 N·m (30 ft. lbs.).
5. Pitman arm on the pitman shaft.
   - Align the marks made at removal.
6. Pitman arm washer and nut.

   Tighten
   - Nut to 250 N·m (185 ft. lbs.).
7. Coupling shield (40) — T Models or shield (35) — S Models.
8. Coupling shield retaining screw (41).

   Tighten
   - Screw to 5.8 N·m (50 in. lbs.).
9. Battery ground cable.

PITMAN SHAFT SEAL REPLACEMENT

The pitman shaft seal may be replaced without removing the steering gear. Remove the pitman arm as outlined under "Steering Gear Replacement" or refer to STEERING LINKAGE (SEC. 3B3).

Remove or Disconnect (Figure 5)

- Rotate the steering wheel from stop to stop, counting the total number of turns. Then turn back exactly halfway, placing the gear on center (the wormshaft flat should be at the 12 o'clock position).

1. Side cover bolts (51).
2. Pitman shaft and side cover assembly from the housing.
3. Pitman shaft seal (54) from the gear housing using a screwdriver. Be careful not to damage the housing bore.
4. Jam nut (21).
5. Side cover (52) from the pitman shaft sector (9). Turn the adjuster screw (22) clockwise.

Inspect

- Gear lubricant for contamination. If contaminated, the gear must be removed and overhauled.

Install or Connect (Figure 5 and 6)

NOTICE: For Steps 4, 5 and 7, see "Notice" on page 3B2-1 of this section.

- Lubricate the new pitman shaft seal (54) with steering gear lubricant.

1. Pitman shaft seal (54). Position the seal in the pitman shaft bore and tap into position using a 25 mm (1 inch) pipe or socket (figure 6).
   - Place the pitman shaft in the steering gear such that the center tooth of the pitman shaft sector (9) enters the center tooth space of the ball nut (1).
   - Fill the steering gear housing with Steering Gear Lubricant meeting GM Specification 1051052 (or equivalent).
2. New gasket onto the gear housing.
3. Side cover (52) onto the adjuster screw (22). Reach through the threaded hole in the side cover with a small screwdriver and turn the adjuster screw (22) counterclockwise until it bottoms and turns back in 1/4 turn.
4. Side cover bolts (51).

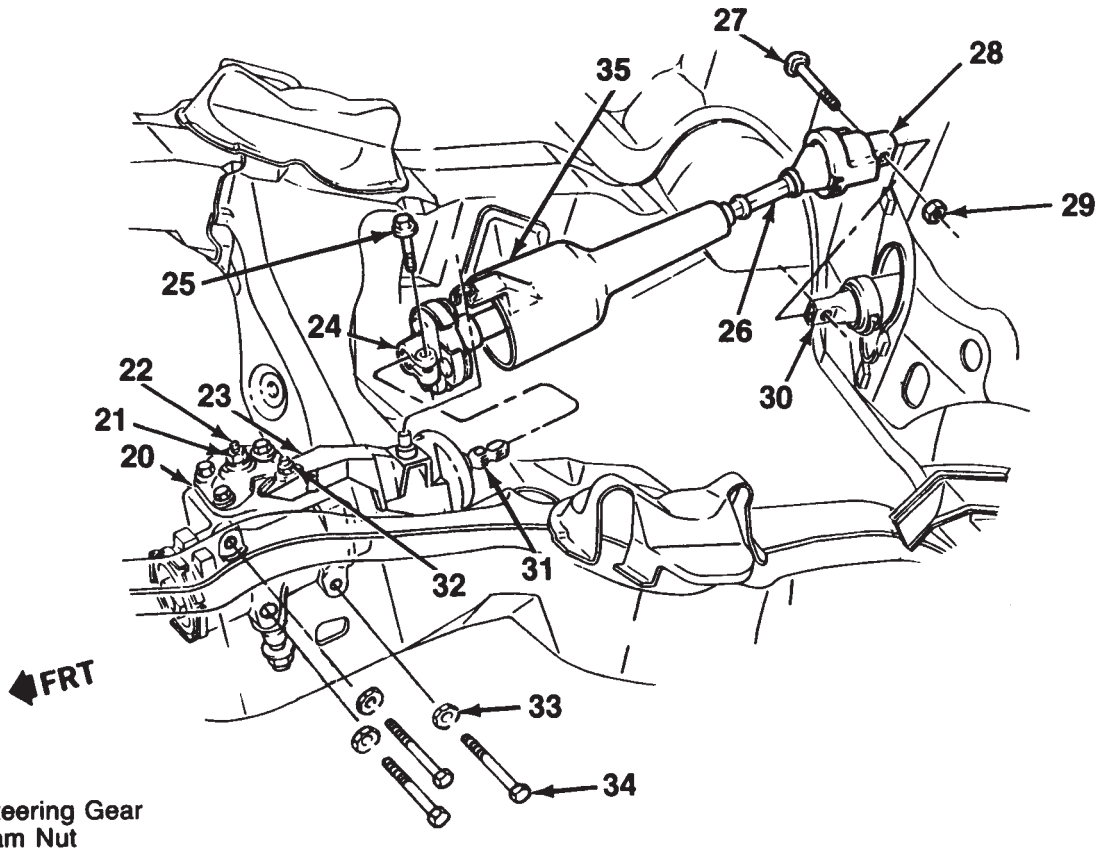

20. Steering Gear
21. Jam Nut
22. Adjuster Screw
23. Adapter
24. Lower Clamp
25. Lower Clamp Bolt
26. Intermediate Shaft
27. Upper Clamp Bolt
28. Clamp
29. Retaining Nut
30. Mainshaft
31. Wormshaft
32. Adapter Nut and Washer
33. Washer
34. Mounting Bolt
35. Shield

S-00157

Figure 2—Steering Gear Mounting (Pickup Truck)

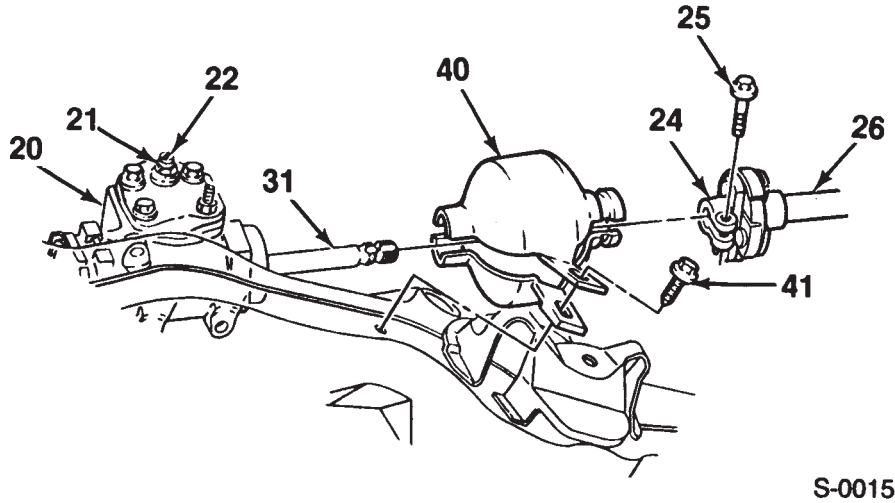

20. Steering Gear
21. Jam Nut
22. Adjuster Screw
24. Lower Clamp
25. Lower Clamp Bolt
26. Intermediate Shaft
31. Wormshaft
40. Coupling Shield
41. Shield Retaining Screw

S-00158

Figure 3—Steering Gear Mounting (Utility Vehicle)

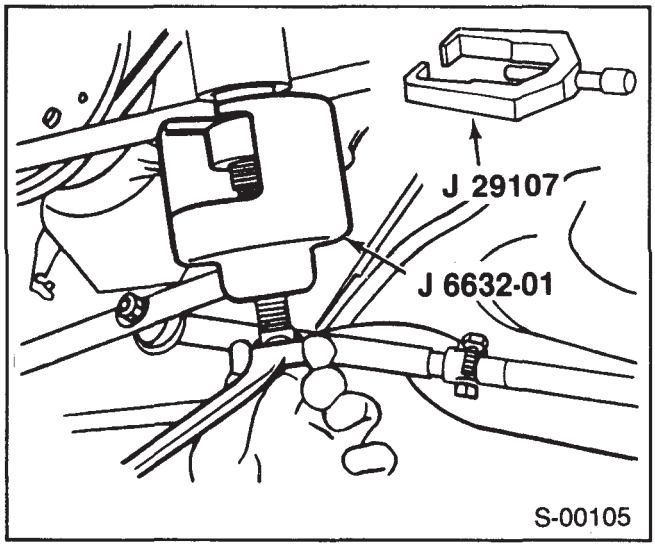

Figure 4—Removing Pitman Arm

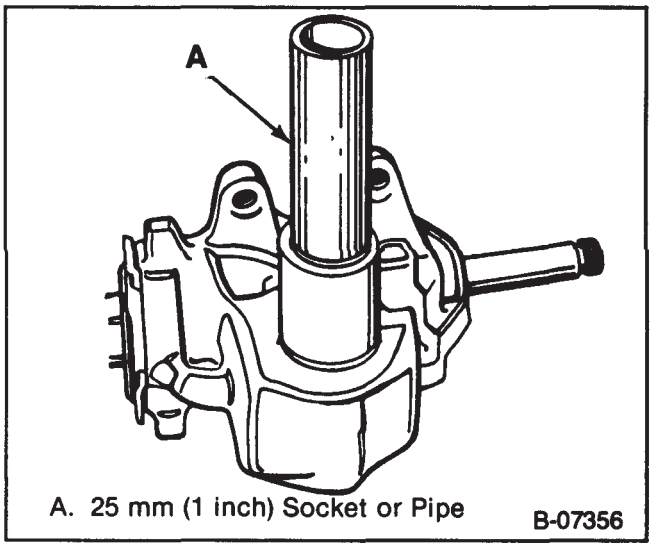

Figure 6—Pitman Shaft Seal Replacement

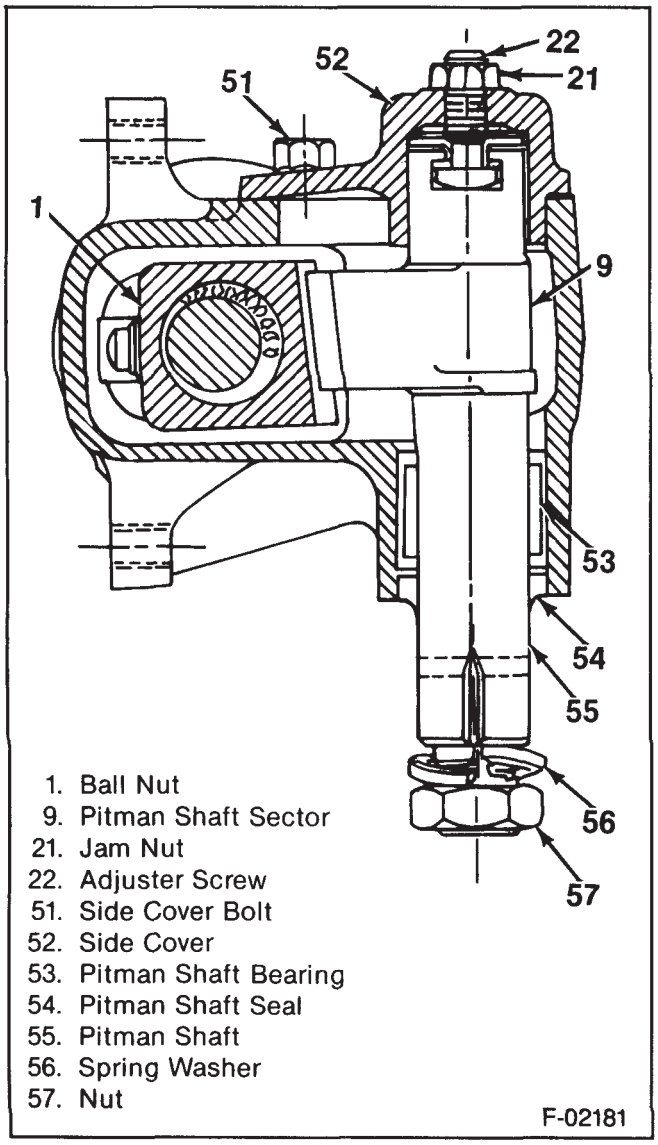

Figure 5—Pitman Shaft Assembly

Tighten

- Bolts to 44 N·m (32 ft. lbs.).

5. Jam nut (21). Tighten the nut to 30.5 N·m (22.5 ft. lbs.).

Adjust

- Steering gear as outlined under "Steering Gear Adjustments."

6. Pitman arm on the pitman shaft (55). Line up the marks made at removal.
7. Pitman shaft washer (56) and nut (57).

Tighten

- Nut to 250 N·m (185 ft. lbs.).

STEERING GEAR ADJUSTMENTS

Before any adjustments are made to the steering gear in an attempt to correct such conditions as shimmy, loose or hard steering etc., a careful inspection should be made of the front end alignment, shock absorbers, wheel balance and tire pressure for the possible steering system problem.

Correct adjustment of the steering gear is very important. Perform adjustments following the sequence listed below.

Remove or Disconnect (Figures 2, 3, 4, 5, 6, and 7)

Tools Required:

J 6632-01 Pitman Arm Remover
J 29107 Pitman Arm Puller

1. Battery ground cable.

- Raise the vehicle. Support the vehicle with suitable jackstands.

2. Coupling shield (40) (T-Model).
3. Pitman arm nut and washer.

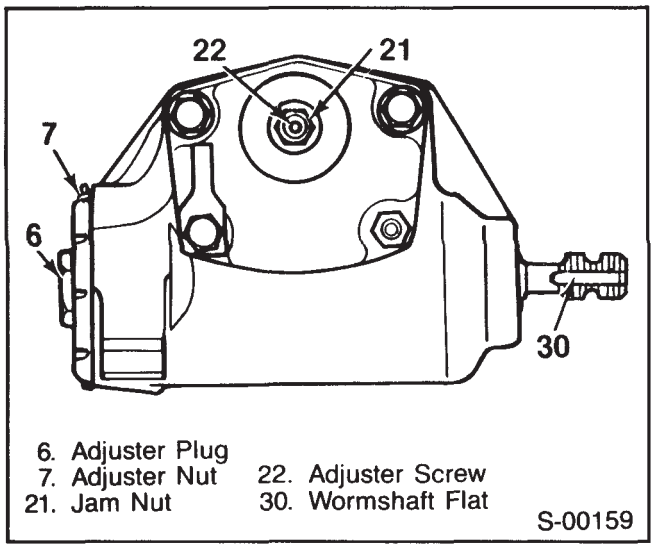

Figure 7—Steering Gear Adjustment Points

- Mark the relationship of the pitman arm to the pitman shaft.

4. Pitman arm using J 6632-01 or J 29107 (figure 4).
- Loosen the adjuster nut (7) and then back the adjuster plug (6) off 1/4 turn (figure 7).

5. Horn cap or cover.
- Turn the steering wheel gently in one direction until stopped by the gear; then turn back one-half turn.

NOTICE: Do not turn the steering wheel hard against the stops when the steering linkage is disconnected from the gear as damage to the ball guides could result.

Measure (Figure 8)

- "Bearing drag" by applying a torque wrench with the socket on the steering wheel nut and rotate through a 90 degree arc. Do not use a torque wrench having a maximum torque reading of more than 6 N·m (50 in. lbs.).

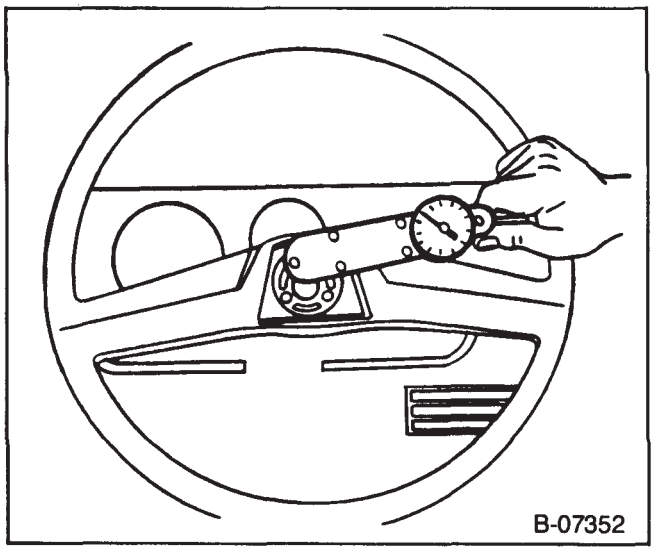

Figure 8—Checking Steering Wheel Torque

Adjust (Figure 7)

- Thrust bearing preload as follows:
  1. Tighten the adjuster plug (6) until the proper "loading preload" is 0.6-1.0 N·m (5-8 in. lbs.).

NOTICE: See "Notice" on page 3B2-1 of this section.

  2. Tighten the adjuster nut (7) to 115 N·m (85 ft. lbs.).
     — If the gear feels "lumpy" after adjustment, there is probably damage in the bearings due to severe impact or improper adjustment; the gear must be disassembled for replacement of damaged parts.
- Over-center preload as follows:
  1. Turn the steering wheel gently from one stop all the way to the other carefully counting the total number of turns. Turn the wheel back exactly half-way to center position.

NOTICE: See "Notice" on page 3B2-1 of this section.

  2. Turn the over center adjuster screw (22) clockwise to take out all lash between the ball nut (1) and pitman shaft sector (9) teeth and then tighten the jam nut (21).

Tighten

- Jam nut (21) to 30 N·m (22 ft. lbs.).

  3. Check the torque at the steering wheel, taking the highest reading as the wheel is turned through center position. Tighten to preload specification of 0.5-1.2 N·m (4-10 in. lbs.).
  4. If necessary, loosen the jam nut (21) and adjust the over center adjuster screw to obtain the proper torque. Tighten the jam nut and recheck the torque reading through the center of travel.

Important

If maximum torque is exceeded, turn the over center adjuster screw (22) counter-clockwise, then come up on the adjustment by turning the jam nut (21) in a clockwise motion.

Install or Connect (Figures 2, 3, and 5)

1. Pitman arm onto the pitman shaft. Line up the marks made at removal.

NOTICE: See "Notice" on page 3B2-1 of this section.

2. Pitman arm washer and nut.

Tighten

- Nut to 250 N·m (185 ft. lbs.).

3. Coupling shield (40) (T-Series). Refer to STEERING LINKAGE (SEC. 3B3).
- Lower the vehicle.

4. Horn cap or cover.
5. Battery ground cable.

SPECIFICATIONS

MANUAL STEERING GEAR

Manufacturer . . . . . Saginaw Steering Gear
Ratio . . . . . 24 to 1
Type . . . . . Recirculating Ball

PRELOAD ADJUSTMENTS

	N·m	In. Lbs.
Worm Thrust Bearing Preload	0.6-1.0	5-8
Over Center Sector Preload	0.5-1.2*	4-10*
Total Steering Gear Preload	1.8 Max.	16 Max.

*In excess of worm bearing preload.

TORQUE SPECIFICATIONS

	N·m	Ft. Lbs.
Steering Gear to Frame Bolts	75	55
Pitman Shaft Nut	250	185
Side Cover Bolts	44	32
Adjuster Screw Jam Nut	30	22
Adjuster Plug Nut	115	85
Intershaft Lower Clamp Bolt	41	30
Coupling Shield Retaining Screw	5.8	50 in. lbs.
Adjuster Plug Preload	0.8 N·m	6.5 in. lbs.

SPECIAL TOOLS

1		J 6632-01	
2		J 29107	1. Pitman Arm Puller 2. Pitman Arm Puller

S-00107

SECTION 3B3

STEERING LINKAGE

NOTICE: When fasteners are removed, always reinstall them at the same location from which they were removed. If a fastener needs to be replaced, use the correct part number for that application. If the correct part number fastener is not available, a fastener of equal size and strength (or stronger) may be used. Fasteners that are not reused and those requiring thread locking compound will be called out. The correct torque value must be used when installing fasteners that require it. If the above conditions are not followed, parts or system damage could result.

CONTENTS

SUBJECT	PAGE
General Description	3B3-1
Diagnosis of Steering Linkage	3B3-1
On-Vehicle Service	3B3-1
Maintenance	3B3-1
Tie Rod Replacement	3B3-2
Idler Arm Replacement	3B3-4
Relay Rod Replacement	3B3-5
Steering Shock Absorber Replacement	3B3-6
Pitman Arm Replacement	3B3-7
Specifications	3B3-8
Special Tools	3B3-8

GENERAL DESCRIPTION

The steering linkage connects both front wheels to the steering gear through the pitman arm. The pitman arm, idler arm, and relay rod form a parallelogram type steering linkage. The right and left tie rods are attached to the relay rod by ball studs. On T-models a steering shock absorber is attached to the relay rod. The tie rods have adjuster tubes for toe-in adjustments.

There are lubrication fittings at each joint. There are prevailing torque nuts at the inner tie rod joints and castellated nuts secured with cotter pins at the outer tie rod joints.

Whenever any steering linkage components are repaired or replaced, check the steering geometry and front end alignment. Refer to FRONT END ALIGNMENT (SECTION 3A).

DIAGNOSIS OF STEERING LINKAGE

Refer to MANUAL STEERING (SECTION 3B2) or POWER STEERING (SECTION 3B1) in this manual, depending on vehicle equipment.

ON-VEHICLE SERVICE

MAINTENANCE

STEERING LINKAGE INSPECTION

Important

- Damaged or broken steering linkage components must be replaced. Never attempt to repair these parts by welding.

Inspect (Figure 1)

1. Raise the vehicle on one side so the tire is about 25 mm (1 inch) off the floor.
2. Set the wheels in the straight ahead position.
3. Set the steering wheel into the locked position.
4. Position the dial indicator.
5. Move the wheel back and forth without moving the steering wheel. The gage reading should not exceed 2.74 mm (0.108 inch).

6. If the gage reading exceeds specifications, inspect all linkage pivots and ball studs for looseness and replace where necessary.

TIE ROD ENDS INSPECTION

The tie rod ends are self-adjusting for wear and require periodic lubrication and inspection. Refer to MAINTENANCE AND LUBRICATION (SECTION 0B). Tie rod ends should be replaced when excessive up and down motion is present, or when excessive end play or loss of motion at the ball stud exists.

IDLER ARM INSPECTION

Inspect (Figure 2)

1. Raise the vehicle. Support the vehicle with suitable jackstands. Allow the front wheels to rotate freely and the steering mechanism freedom to turn. Position the wheels in a straight ahead position.
2. Place a spring scale near the relay rod end of the idler arm. Exert 110 N·m (25 ft. lbs.) force upward and then downward while measuring the total distance the arm moves. The allowable deflection is ±3.18 mm (1/8 inch) for a total of 6.35 mm (1/4 inch). Replace the idler arm if it fails this test.

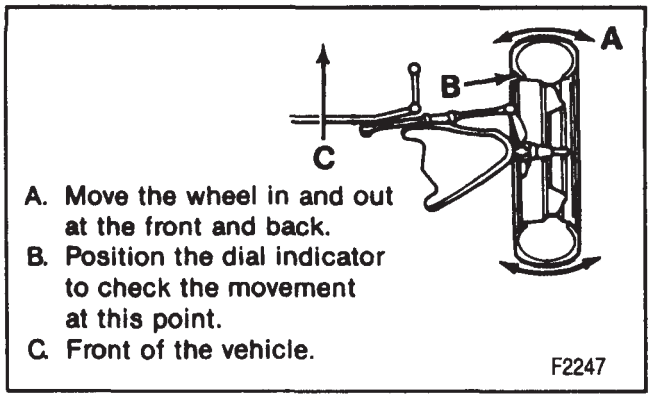

Figure 1—Checking the Linkage Wear

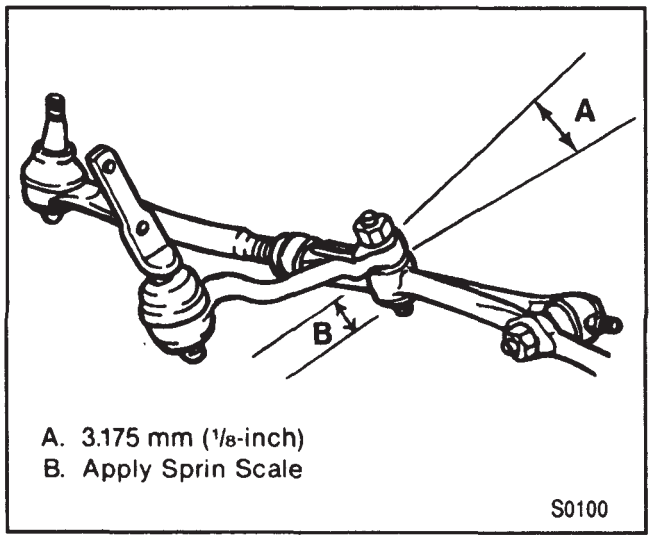

Figure 2—Checking Idler Arm Movement

Important

- Jerking the right wheel and tire assembly back and *forth, causing an up and down movement of the* idler arm, is NOT an acceptable testing procedure. There is no control on the amount of force being applied to the idler arm.
- Care should be used whenever shimmy complaints are suspected of being caused by loose idler arms. Before suspecting suspension or steering components, technicians should consider areas such as dynamic imbalance, runout or force variation of wheel and tire assemblies and road surface irregularities. Refer to WHEELS AND TIRES (SECTION 3E).

TIE ROD REPLACEMENT

There are two tie rod assemblies. Each assembly is of a five piece construction, consisting of a sleeve, two clamps and two tie rod ends. The ends are threaded into the sleeve and secured with the clamps. Right and left hand threads are used for toe-in adjustments and steering gear centering.

Before any service is undertaken, note the position of the tie rod adjuster tube, and the direction from which the bolts are installed. The tie rod adjuster tube components may be rusted. If the torque required to remove the nut from the bolt exceeds 9 N·m (62 in. lbs.) discard the nuts and rotate the clamps until they move *freely. Install all parts, with the correct part number, in* the proper position.

All procedures for alignment, adjustment, and assembly of tie rods apply to both left and right sides.

Important

- Use the proper tool to separate all tie rods and ball joints.

Remove or Disconnect (Figures 3, 4, and 5)

Tools Required:
J 6627-A Wheel Stud and Tie Rod Remover

- Raise the vehicle. Support the vehicle with suitable safety stands.

1. Cotter pins (3) and nuts (2).
2. Outer tie rod (1) ball studs from the steering knuckle. Use J 6627-A (figure 5).

NOTICE: Do not attempt to disengage the joint by driving a wedge type tool between the joint and the knuckle, because seal damage could result.

3. Inner tie rod (7) ball studs from the relay rod (10). Use J 6627-A.
4. Tie rod ends from the adjuster tube (6). Loosen the clamp bolts (9) and unscrew the assemblies.

Inspect

- Tie rod end for damage.
- Tie rod end seals for excessive wear.
- Threads on the tie rod and tie rod end for damage.
- Ball stud threads for damage.
- Adjuster tube for bending or damaged threads.

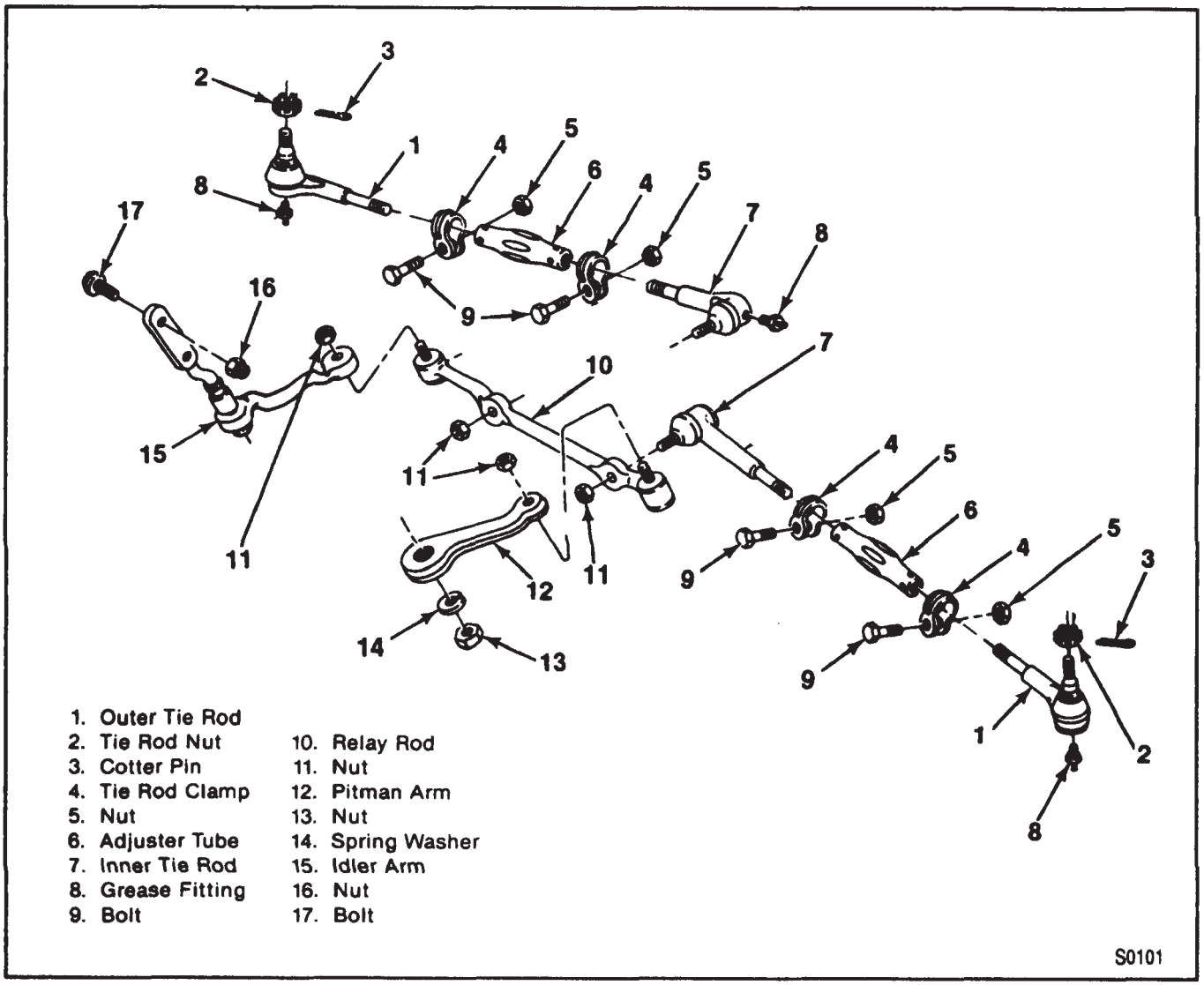

Figure 3—Steering Linkage (Two-Wheel Drive Models)

Clean

- Threads on the ball stud and in the ball stud nut.
- The tapered surfaces.

Install or Connect (Figures 3 and 4)

NOTICE: For Steps 3 and 5 see "Notice" on page 3B3-1.

Tools Required:
J 29193 Steering Linkage Installer (12 mm)
J 29194 Steering Linkage Installer (14 mm)

- If the tie rod ends were removed, lubricate the tie rod threads with chassis lubricant.

1. Tie rod ends to the adjuster tube (6). The number of threads on both the inner and outer tie rod ends must be equal within three threads.
2. Inner tie rod (7) ball studs to the relay rod (10). Make certain the seal is on the stud. Tighten J 29193 or J 29194 to 54 N·m (40 ft. lbs.) to seat the tapers. Remove the tool.
3. Nut (11) to the inner tie rod ball stud.

Tighten

- Nut (11) to 47 N·m (35 ft. lbs.).

4. Outer tie rod (1) ball studs to the steering knuckle.
5. Nut (2).

Tighten

- Nut (2) to 47 N·m (35 ft. lbs.).

Important

- Advance the nut to align the nut slot with the cotter pin hole. Never back the nut off to align the cotter pin hole.

6. New cotter pin (3). Spread the cotter pin ends.

- Lower the vehicle.

Adjust (Figure 6)

- Toe-in. Refer to FRONT END ALIGNMENT (SECTION 3A) in this manual.

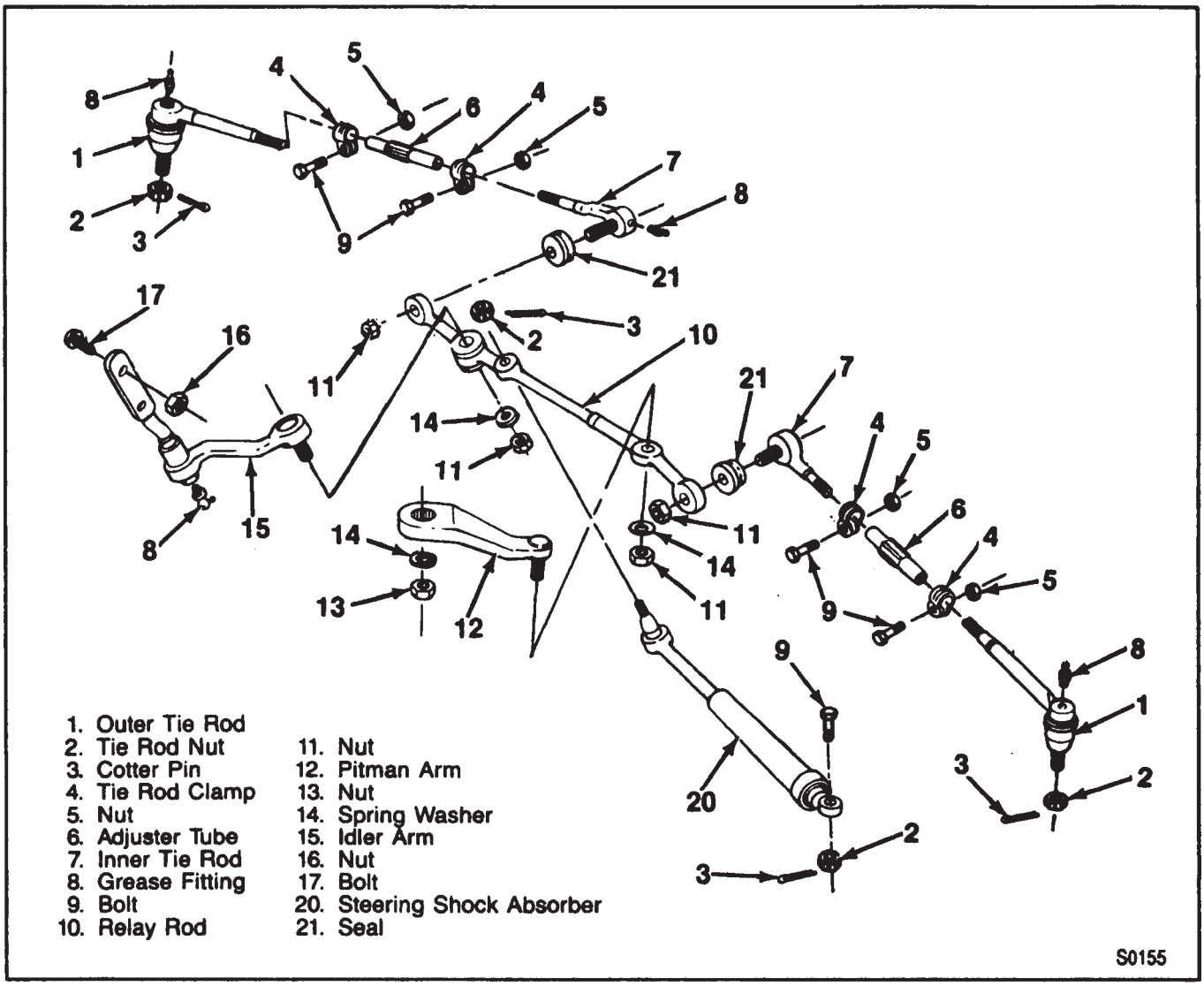

Figure 4—Steering Linkage (Four-Wheel Drive Models)

7. Adjuster tube clamp bolts (9). Before tightening the clamp bolts, be sure the following conditions have been met.
   - The clamps must be positioned between the locating dimples at either end of the adjuster tube.
   - The clamps must be positioned within the angular travel shown in figure 7.
   - The relationship of the clamp slot with the slot in the adjuster tube must be as shown in figure 6.
   - Both inner and outer tie rod ends must rotate for their full travel. The position of each tie rod end must be maintained as the clamps are tightened to ensure free movement of each joint.

Tighten

- Tube clamp bolts to 19 N·m (14 ft. lbs.).

IDLER ARM REPLACEMENT

Important

- Use the proper tool to separate all ball joints.

Remove or Disconnect (Figures 3 and 4)

Tools Required:
J 24319-01 Steering Linkage Puller

- Raise the vehicle. Support the vehicle with suitable safety stands.

1. Bolts (17) and nuts (16).
2. Nut (11) from the idler arm ball stud.
3. Relay rod (10) from the idler arm (15). Use J 24319-01.
4. Idler arm (15).

Inspect

- Ball stud threads for damage.
- Ball stud seal for cuts or other damage.

Clean

- Threads on the ball stud and in the ball stud nut.

Install or Connect (Figures 3 and 4)

NOTICE: For Steps 1 and 3 see "Notice" on page 3B3-1.

Tools Required:
J 29193 Steering Linkage Installer (12 mm)
J 29194 Steering Linkage Installer (14 mm)

- Position the idler arm (15) on the frame.

1. Bolts (17) and nuts (16).

Tighten

- Nuts (16) to 82 N.m (60 ft. lbs.).

2. Relay rod to the idler arm ball stud. Make certain the seal is on the stud. Tighten J 29193 or J 29194 to 54 N.m (40 ft. lbs.) to seat the tapers. Remove the tool.
3. Nut (11) to the idler arm ball stud.

Tighten

- Two-Wheel Drive Models: Nut (11) to 47 N.m (35 ft. lbs.).
- Four-Wheel Drive Models: Nut (11) to 82 N.m (60 ft. lbs.).

- Lower the vehicle.

Adjust

- Toe in. Refer to FRONT END ALIGNMENT (SECTION 3A) in this manual.

RELAY ROD REPLACEMENT

Important

- Use the proper tool to separate all ball joints.

Remove or Disconnect (Figures 3 and 4)

Tools Required:
J 24319-01 Steering Linkage Puller

- Raise the vehicle. Support the vehicle with suitable safety stands.

1. Inner tie rods (7) ball stud nuts (11).
2. Inner tie rods (7) ball studs from the relay rod (10). Refer to "Tie Rod Replacement" in this section.
3. Four-Wheel Drive Models: Steering shock absorber ball stud nut (2) at the relay rod (10).
4. Four-Wheel Drive Models: Steering shock absorber (20) from the relay rod (10). Use J 24319-01.
5. Relay rod ball stud nut (11) at the pitman arm (12).
6. Relay rod ball stud from the pitman arm (12). Use J 24319-01.
7. Relay rod ball stud nut (11) at the idler arm (15).

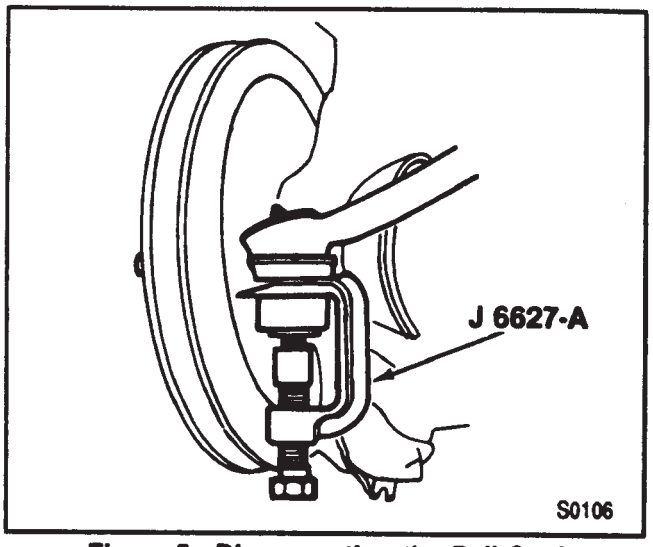

Figure 5—Disconnecting the Ball Stud

8. Relay rod ball stud from the idler arm (15). Use J 24319-01.
9. Relay rod (10).

Inspect

- Threads on the tie rod and the tie rod end for damage.
- Ball stud threads for damage.
- Ball stud seals for excessive wear.

Clean

- Threads on the ball stud and the ball stud nut.

Install or Connect (Figures 3 and 4)

NOTICE: For Steps 2, 4, and 6, see "Notice" on page 3B3-1.

Tools Required:
J 29193 Steering Linkage Installer (12 mm)
J 29194 Steering Linkage Installer (14 mm)

1. Relay rod ball stud to the idler arm (15). Make certain the seal is on the stud. Tighten J 29193 or J 29194 to 54 N.m (40 ft. lbs.) in order to seat the taper.
2. Nut (11) to the relay rod ball stud at the idler arm (15).

Tighten

- Two-Wheel Models: Nut (11) to 47 N.m (35 ft. lbs.).
- Four-Wheel Drive Models: Nut (11) to 82 N.m (60 ft. lbs.).

3. Relay rod ball stud to the pitman arm (12). Make certain the seal is on the stud. Tighten J 29193 or J 29193 to 54 N.m (40 ft. lbs.) in order to seat the taper.

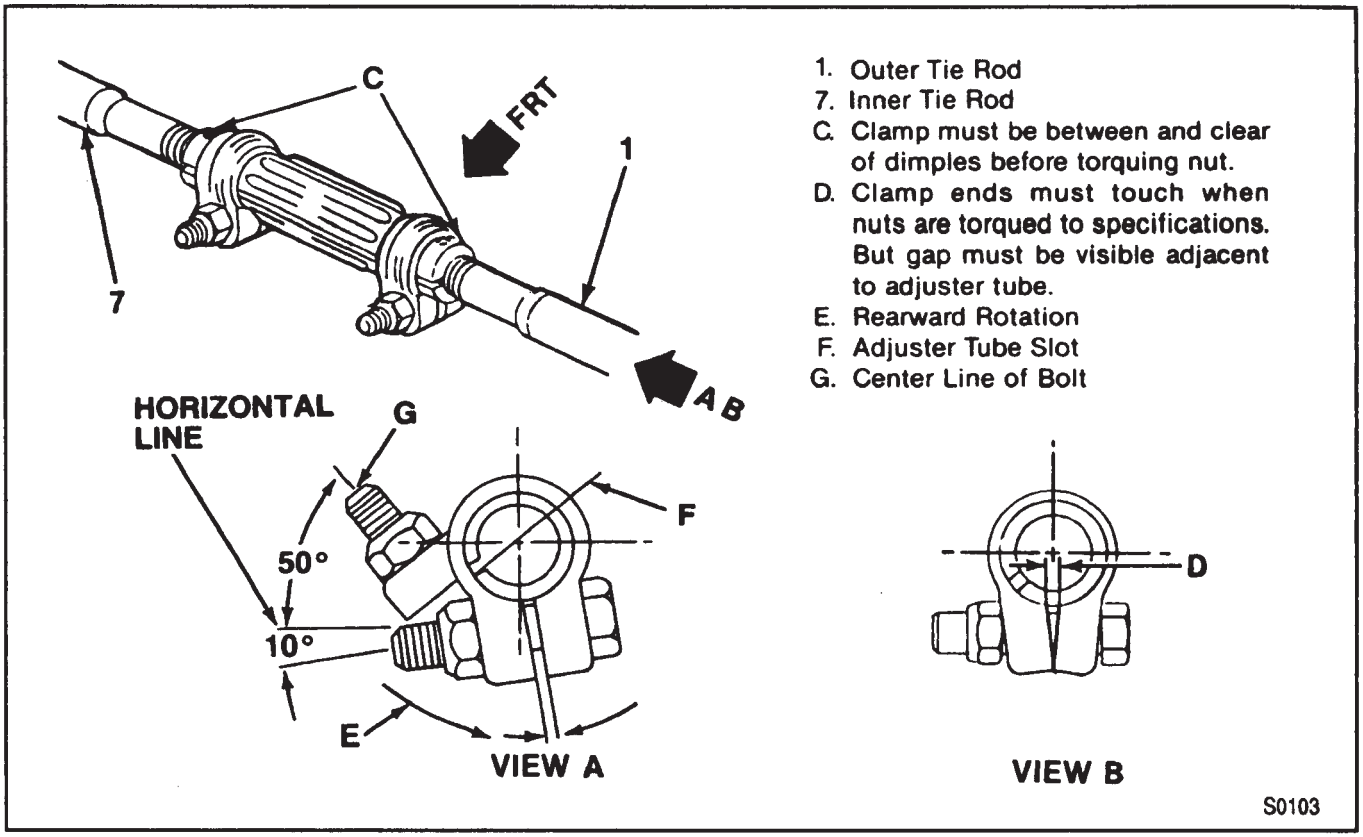

1. Outer Tie Rod
7. Inner Tie Rod
C. Clamp must be between and clear of dimples before torquing nut.
D. Clamp ends must touch when nuts are torqued to specifications. But gap must be visible adjacent to adjuster tube.
E. Rearward Rotation
F. Adjuster Tube Slot
G. Center Line of Bolt

Figure 6—Tie Rod Clamp and Adjuster Tube Orientation

4. Nut (11) to the relay rod ball stud at the pitman arm.

Tighten

- Two-Wheel Drive Models: Nut (11) to 47 N·m (35 ft. lbs.).
- Four-Wheel Drive Models: Nut (11) to 82 N·m (60 ft. lbs.)

5. Inner tie rod (7) ball studs to the relay rod (10).
   - Make certain the seal is on the stud. Tighten J 29193 or J 29193 to 54 N·m (40 ft. lbs.) in order to seat the taper.
6. Nut (11) to 47 N·m (35 ft. lbs.).

Tighten

- Two-Wheel Drive Models: Nut (11) to 47 N·m (35 ft. lbs.).
- Four-Wheel Drive Models: Nut (11) to 82 N·m (60 ft. lbs.).

Adjust

- Toe-in. Refer to FRONT END ALIGNMENT (SECTION 3A) in this manual.

STEERING SHOCK ABSORBER REPLACEMENT

Important

- Use the proper tool to separate all ball joints.

Remove or Disconnect (Figure 4)

Tools Required:
J 24319-01 Steering Linkage Puller

1. Nut (2) from the steering shock absorber (20) ball stud.
2. Steering shock absorber (20) from the relay rod (10). Use J 24319-01.
3. Nut (2) and bolt (9) from the frame mount end.
4. Steering shock absorber (20).

Inspect

- Ball stud threads for damage.
- Ball stud seals for excessive wear.

Clean

- Threads on the ball stud and ball stud nut.

Install or Connect (Figure 4)

NOTICE: For Steps 2 and 5, see "Notice" on page 3B3-1.

Tools Required:
J 29193 Steering Linkage Installer (12 mm)
J 29194 Steering Linkage Installer (14 mm)

1. Steering shock absorber (20) to the frame bucket.
2. Bolt (9) and nut (2).

Tighten

- Nut (2) to 35 N·m (26 ft. lbs.).

3. Cotter pin (3). Bend out the ends of the cotter pin.
4. Steering shock absorber (20) ball stud to the relay rod (10). Make certain the seal is on the stud. Tighten J 29193 or J 29193 to 54 N·m (40 ft. lbs.) in order to seat the taper.
5. Nut (2).

Tighten

- Nut (2) to 62 N·m (45 ft. lbs.).

PITMAN ARM REPLACEMENT

Important

- Use the proper tool to separate all ball joints.

Remove or Disconnect (Figures 3, 4, and 7)

Tools Required:
J 24319-01 Steering Linkage Puller
J 29107 Pitman Arm Puller
J 6632-01 Pitman Arm Remover

1. Air snorkel assembly.
- Slide intermediate shaft cover up.
- Mark the relationship of the intermediate shaft.
2. Intermediate shaft.
3. Oil filter lines at crossmember bracket.
4. Splash shield.
5. Pitman arm ball stud nut (11) and spring washer (14).
6. Pitman arm ball stud (12) from the relay rod (10), using J 24319-01.
7. Two lower steering gear bolts.
- Loosen (do not remove) upper steering gear bolt.
- Rotate the steering gear for pitman arm clearance at the frame crossmember and support it with a small block of wood.
8. Pitman arm nut (13) and spring washer (14).
- Mark the pitman arm and the pitman shaft. This will permit proper alignment at assembly.

NOTICE: Do not hammer on pitman arm, pitman shaft, or puller. Damage to the pitman arm or steering gear may result.

9. Pitman arm (12). Use J 6632-01 or J 29107 (figure 7).

Inspect

- Ball stud threads for damage.
- Ball stud seals for excessive wear.

Clean

- Threads on the ball stud and ball stud nut.

Install or Connect (Figure 3)

Tools Required:
J 29193 Steering Linkage Installer (12 mm)
J 29194 Steering Linkage Installer (14 mm)

NOTICE: For Steps 2, 3, and 5, see "Notice" on page 3B3-1.

1. Pitman arm (12) on the pitman shaft. Use J 29194.
- Line up the marks that were made before removal.
2. Spring washer (14) and nut (13).

Tighten

- Nut to 250 N·m (185 ft. lbs.).

- Rotate the steering gear back to proper position and remove the block of wood.

3. Two steering gear bolts.

Tighten

- Three steering gear bolts to 75 N·m (55 ft. lbs.).

4. Pitman arm ball stud (12) to the relay rod. Use J 29193.
5. Pitman arm ball stud nut (11) and spring washer (14).

Tighten

- Nut to 82 N·m (60 ft. lbs.).

6. Splash shield.
7. Oil filter lines to the crossmember bracket.
8. Intermediate shaft. Line up the marks made at removal.
- Slide the intermediate shaft cover down.
9. Air snorkel assembly.

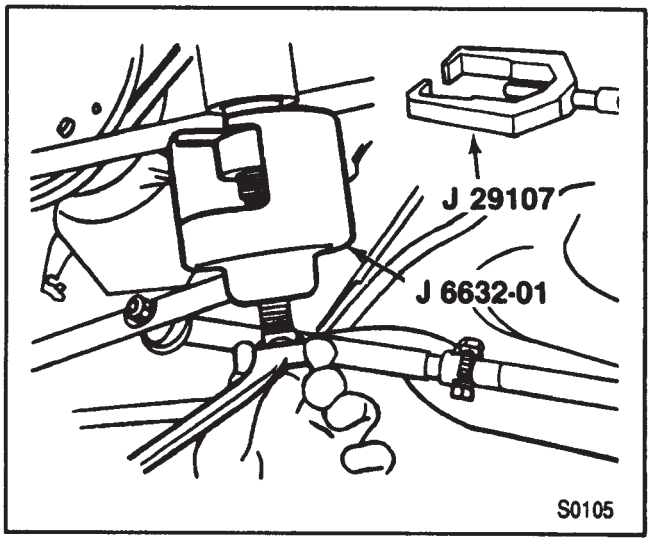

Figure 7—Removing the Pitman Arm

SPECIFICATIONS

FASTENER TIGHTENING SPECIFICATIONS

	N·m	Ft. Lbs.
Steering Knuckle to Tie Rod End Nut (S/T)	47	35
Adjuster Tube Clamp Bolts (S/T)	19	14
Tie Rod to Relay Rod (S/T)	47	35
Idler Arm to Relay Rod (S)	47	35
Idler Arm to Relay Rod (T)	82	60
Idler Arm to Frame (S/T)	82	60
Steering Shock Absorber to Relay Rod (T)	62	45
Steering Shock Absorber to Front Crossmember (T)	35	26
Pitman Arm to Steering Gear (S/T)	250	185

T2007

SPECIAL TOOLS

1 J 6627-A

2 J 6632-01

3 J 24319-01

4 J 29107

5 J 29193

6 J 29194

1. Tie Rod Puller
2. Pitman Arm Puller
3. Universal Steering Linkage Puller
4. Universal Pitman Arm Puller
5. Steering Linkage Installer (12mm) GM Torque Prevailing Nuts
6. Steering Linkage Installer (14mm) GM Torque Prevailing Nuts

S0102

SECTION 3C

FRONT SUSPENSION

***NOTICE:** When fasteners are removed, always reinstall them at the same location from which they were removed. If a fastener needs to be replaced, use the correct part number fastener for that application. If the correct part number fastener is not available, a fastener of equal size and strength (or stronger) may be used. Fasteners that are not reused and those requiring thread locking compound will be called out. The correct torque value must be used when installing fasteners that require it. If the above conditions are not followed, parts or system damage could result.*

CONTENTS

SUBJECT	PAGE
General Description	3C- 1
Diagnosis of Front Suspension	3C- 2
Ball Joint Wear Check	3C- 3
Diagnosis of Shock Absorbers	3C- 5
Shock Absorber Test	3C- 5
Diagnosis of Wheel Bearings	3C- 6
On-Vehicle Service: Two-Wheel Drive Front Suspension	3C- 9
Wheel Bearing Adjustment	3C- 9
Rotor, Bearing and Seal Replacement	3C- 9
Wheel Hub Bolt Replacement	3C-10
Shock Absorber Replacement	3C-10
Stabilizer Shaft (Bar) Replacement	3C-11
Lower Ball Joint Replacement	3C-12
Upper Ball Joint Replacement	3C-14
Steering Knuckle Replacement	3C-15
Coil Spring Replacement	3C-17
Upper Control Arm Replacement	3C-18
Lower Control Arm Replacement	3C-18
Lower Control Arm Bushing Replacement	3C-19
On-Vehicle Service: Four-Wheel Drive Front Suspension	3C-21
Shock Absorber Replacement	3C-21
Stabilizer Shaft (Bar) Replacement	3C-21
Disc Replacement	3C-22
Wheel Stud Replacement	3C-22
Hub and Bearing, Knuckle and Seal Assembly Replacement	3C-23
Ball Joint Replacement	3C-24
Upper Control Arm, Bushing and Bumper Replacement	3C-26
Lower Control Arm and Bushing Replacement	3C-27
Torsion Bar(s) and Support Assembly Replacement	3C-29
Specifications	3C-30
Special Tools	3C-31

GENERAL DESCRIPTION

The front suspension is designed to allow each wheel to compensate for changes in the road surface level without appreciably affecting the opposite wheel. Each wheel is independently connected to the frame by a steering knuckle, ball joint assemblies, and upper and lower control arms. The control arms are specifically designed and positioned to allow the steering knuckles to move in a prescribed three-dimensional arc. The front wheels are held in proper relationship to each other by two tie rods which are connected to steering arms on the knuckles and to an intermediate rod.

Coil chassis springs are mounted between the spring housings on the frame and the lower control arms. Rid control is provided by double, direct-acting, shock absorbers mounted inside the coil springs and attached to the lower control arms by bolts and nuts. The upper

portion of each shock absorber extends through the upper control arm frame bracket and is secured with two grommets, two grommet retainers, and a nut.

Side roll of the front suspension is controlled by a spring steel stabilizer (bar). Throughout the remainder of this section stabilizer bar is referred to as stabilizer shaft. It is mounted in rubber bushings which are held to the frame side rails by brackets. The ends of the stabilizer are connected to the lower control arms by link bolts isolated by rubber grommets.

The upper control arm is attached to a cross shaft through isolating rubber bushings. The cross shaft, in turn, is bolted to frame brackets.

A ball joint assembly is riveted to the outer end of the upper arm. It is pre-loaded by a rubber spring to ensure proper seating of the ball in the socket. The *upper ball joint is attached to the steering knuckle by a* castellated nut and cotter pin.

The inner ends of the lower control arm have pressed-in bushings. Bolts, passing through the bushings, attach the arm to the frame. The lower ball joint assembly is a press fit in the lower control arm and attaches to the steering knuckle with a castellated nut *and cotter pin.*

Rubber grease seals are provided at ball socket assemblies to keep dirt and moisture from entering the joint and damaging bearing surfaces.

Four-wheel drive "T" Series models have a front suspension consisting of control arms, stabilizer bar, shock absorber and a right and left torsion bar. Torsion bars are used instead of conventional coil springs. The front end of the torsion bar is attached to the lower control arm. The rear of the torsion bar is mounted into an adjustable arm at the torsion bar crossmember. Vehicle trim height is controlled by this arm adjustment.

"T" Series trucks have sealed front wheel bearings. *These bearings are pre-adjusted and require no lubri*cation maintenance. Darkened areas on the bearing assembly are caused by a heat treatment process and do not require bearing replacement.

DIAGNOSIS OF FRONT SUSPENSION

PROBLEM	POSSIBLE CAUSE	CORRECTION
Hard Steering	1. Ball joints and steering linkage need lubrication. 2. Low or uneven front tire pressure. 3. *Incorrect front wheel alignment (manual* steering).	1. Lubricate the ball joints and linkage. 2. Inflate tires to the recommended pressure. 3. *Check and align the front suspension.*
Poor Directional Stability	1. Ball joints and steering linkage need lubrication. 2. Low or uneven front or rear tire pressure. 3. Loose wheel bearings. 4. Incorrect front wheel alignment (caster). 5. Broken springs. 6. Malfunctioning shock absorber. 7. Broken stabilizer bar or a missing link.	1. Lubricate the ball joints and linkage. 2. Inflate tires to the recommended pressure. 3. Adjust the wheel bearings. 4. Check and align the front suspension. 5. Replace the springs. 6. Check and replace the shock absorber. 7. Replace the stabilizer bar or link.
Front Wheel Shimmy (Smooth Road Shake)	1. Tire and wheel are out of balance or out of round. 2. Worn or loose wheel bearings. 3. Worn ball joints. 4. Malfunctioning shock absorber.	1. Balance the tires, check run-out. 2. Adjust the wheel beaings. 3. Replace the ball joints. 4. Check and replace the shock absorber.
Vehicle Pulls to One Side (No Braking Action)	1. Low or uneven tire pressure. 2. Front or rear brakes dragging. 3. Broken or sagging front spring. 4. Incorrect front wheel alignment (camber).	1. Inflate the tires to the recommended pressure. 2. Adjust the brakes. 3. Replace the spring. 4. Check and align the front suspension.

DIAGNOSIS OF FRONT SUSPENSION (cont'd)

PROBLEM	POSSIBLE CAUSE	CORRECTION
Noise in the front end.	1. Ball joints and steering linkage need lubrication. 2. Loose shock absorber or worn bushings. 3. Worn control arm bushings. 4. Worn or loose wheel bearings. 5. Loose stabilizer bar. 6. Loose wheel nuts. 7. Spring is improperly positioned. 8. Loose suspension bolts.	1. Lubricate at the recommended intervals. 2. Tighten the bolts or replace the shock absorber. 3. Replace the bushings. 4. Adjust or replace the wheel bearings. 5. Tighten all the stabilizer bar attachments. 6. Tighten the wheel nuts. 7. Reposition the spring. 8. Tighten to specifications or replace.
Wheel Tramp	1. Tire and the wheel are out of balance. 2. Tire and the wheel are out of round. 3. Blister or bump on the tire. 4. Improper shock absorber action.	1. Balance the wheels. 2. Replace the tire. 3. Replace the tire. 4. Replace the shock absorber.
Excessive or Uneven Tire Wear	1. Underinflated or overinflated tires. 2. Improper toe-in. 3. Wheels are out of balance. 4. Hard driving. 5. Overloading the vehicle. 6. Tires not rotated.	1. Inflate the tire to the recommended pressure. 2. Adjust toe-in setting. 3. Balance the wheels. 4. Follow proper driving techniques. 5. Do not exceed the maximum recommended payload rating. 6. Follow rotation schedule and pattern.
Scuffed Tires	1. Toe-in is incorrect. 2. Excessive speed on turns. 3. Tires are improerly inflated. 4. Suspension arm is bent or twisted.	1. Adjust toe-in setting. 2. Follow proper driving techniques. 3. Inflate the tires to the recommended pressure. 4. Replace the suspension arm.
Cupped Tires	1. Front shock absorbers are defective. 2. Worn ball joints. 3. Wheel bearings are incorrectly adjusted or worn. 4. Wheel and tire is out of balance. 5. Excessive tire or wheel runout.	1. Replace the shock absorbers. 2. Replace the ball joints. 3. Adjust or replace the wheel bearings (also replace the races). 4. Balance the wheel and tire. 5. Check and compensate for runout.
		D0121

BALL JOINT WEAR CHECK

Tool Required:
J 8001 Dial Indicator

- Be sure the vehicle rests on a level surface.
- Raise the vehicle and support it with suitable safety stands. 4WD—support the lower control arm with a floor stand or jack as far outboard as possible under the stabilizer bar bracket (figure 1).

Important

- The vehicle must be stable and should not rock on the floor stands.
- The upper control arm bumper must not contact the frame.

1. Wipe the ball joints clean and check the seals for cuts or tears.
   - If a seal is cut or torn, the ball joint MUST be replaced.
2. Adjust the wheel bearings. Refer to "wheel Bearing Adjustment" in this section.
3. Check the ball joints for horizontal looseness, 2WD and 4WD.

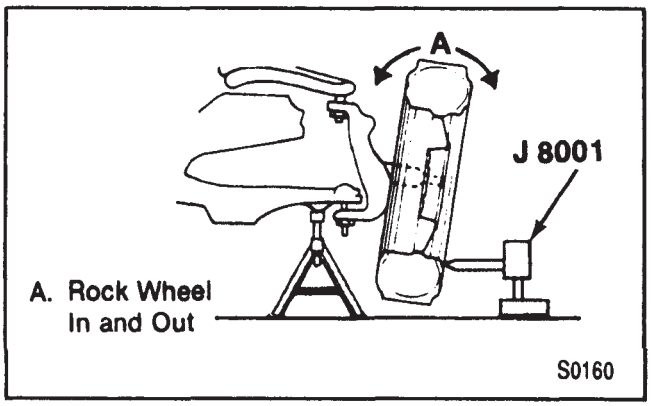

Figure 1—Checking Ball Joint Horizontal Looseness

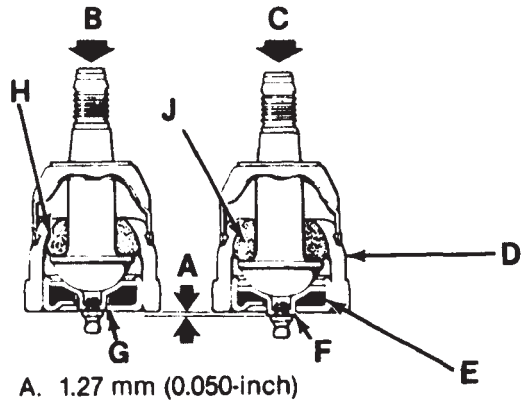

A. 1.27 mm (0.050-inch)
B. Worn Ball Joint
C. New Ball Joint
D. Housing Socket
E. Rubber Pressure Ring
F. Grease Fitting Extended When New
G. Grease Fitting Withdrawn 1.27 mm (0.050-inch) or More When Worn
H. Wear Surfaces
J. Sintered Iron Bearing

S0161

Figure 2—Checking Lower Ball Joint Wear (2WD)

- Position a dial indicator against the lowest outboard point on the wheel rim (figure 1).
- Rock the wheel in and out while reading the dial indicator. This will show horizontal looseness in both joints (figure 1).
- The dial indicator reading should be no more than 3.18 mm (0.125 inch). If the reading is too much, check the lower ball joints for vertical looseness.

4. Check the lower ball joints for wear and vertical looseness.

2-WHEEL DRIVE

- The lower ball joint is inspected for wear by sight. Wear is indicated by the position of the nipple into which the grease fitting is threaded. This round nipple projects 1.27 mm (0.050 inch) beyond the surface of the ball joint cover on a new, unworn joint. Normal wear will result in the surface of this nipple retreating very slowly inward (figure 2).
- Observe or scrape a scale, screwdriver or fingernail across the cover. If the round nipple is flush or inside the cover surface, replace the ball joint.

4-WHEEL DRIVE

- With the vehicle on the jack stands, place a dial indicator against the spindle to show vertical movement (figure 3).
- Pry between the lower control arm and the outer bearing race while reading the dial indicator. This will show vertical looseness in the ball joints (figure 4).

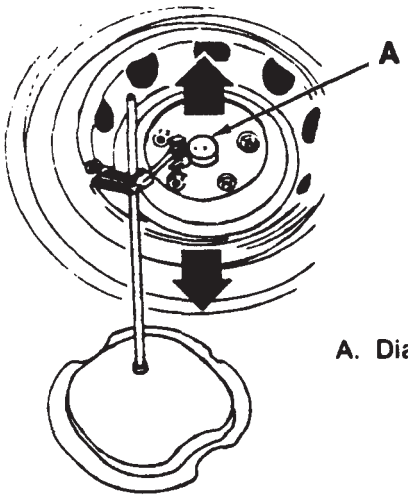

A. Dial Indicator

S0162

Figure 3—Dial Indicator Position (4WD)

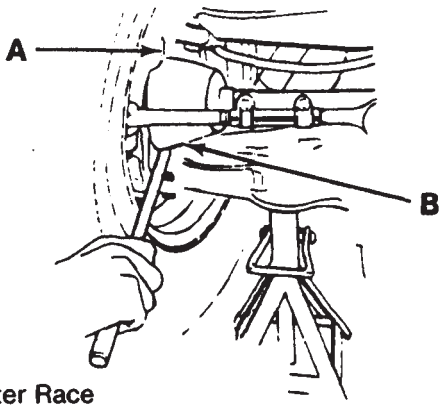

A. Outer Race
B. Prying Between the Lower Control Arm and the Outer Bearing Race

S0163

Figure 4—Checking Lower Ball Joint Wear (4WD)

- The lower ball joint is not a preloaded ball joint and may show some amount of looseness.

Important

- Do not pry between the lower control arm and the drive axle seal. Damage to the seal will result.
- If the dial indicator reading is more than 3.18 mm (0.125 inch), replace the ball joint.

5. If the lower ball joint is within specifications and horizontal looseness is too much, check the upper ball joint for wear.
   - Disconnect the ball joint from the knuckle.
   - If any looseness is found, or the stud can be twisted with your fingers, replace the ball joint.

DIAGNOSIS OF SHOCK ABSORBERS

PROBLEM	POSSIBLE CAUSE	CORRECTION
Noisy Shocks	Loose mounting.	Check all mounting torques (bolt and/or nut).
Excessive Road Shock	1. Tire air pressure is too high. 2. Loose wheel bearings. 3. Camber adjustment is incorrect (negative camber contributes to road shock). 4. Weak or broken front spring. 5. Loose suspension components.	1. Deflate to correct pressure. 2. Adjust bearings. 3. Adjust camber. 4. Replace the spring. 5. Inspect, repair, and adjust as necessary.
Leaky Shocks	Seals are worn out.	Replace shocks.
Weak Shocks	1. Shocks are worn out. 2. Loss of shock fluid.	1. Replace shocks. 2. Replace shocks.
Vibration And Shimmy	1. Seal damage resulting in loss of lubricant, corrosion, excessive wear. 2. Tires and wheels, or brake drums are out of balance. 3. Bent wheel or tire is out of round. 4. Wheel stud nuts torqued unevenly. 5. Loose steering linkage. 6. Wheel is loose on the hub. 7. Driveline universal joints are rough or defective (may be confused with steering vibration. 8. Malfunctioning shock absorbers.	1. Replace damaged parts as necessary. 2. Balance the tires and wheels, turn the brake drums. 3. Replace the wheel and remount, or replace the tire. 4. Retorque the wheel stud nuts. 5. Adjust, torque or repair as necessary. 6. Inspect the wheel bolt holes for damage. Replace the wheel if needed. Replace all wheel studs. 7. Repair driveline. 8. Replace the shock absorbers.

D0122

SHOCK ABSORBER TEST

BENCH TEST—SPIRAL GROOVE RESERVOIR SHOCK ABSORBERS

1. Purge the air from the pressure chamber.
   - Extend the shock vertically—top end up.
   - Turn the shock over and collapse it vertically—top end down.
   - Repeat the above steps five times.
2. Place the shock absorber in a vise with the jaws clamped onto the shock's bottom mount.
   - Shock absorber should be positioned vertically in the vise—top end up.
   - Do not clamp vise jaws on the shock's reservoir tube or upper stem threads.
3. Pump the shock absorber at various rates of speed and observe the rebound force.
   - Rebound force is normally stronger than compression force (approximately two to one).
   - Rebound force should be smooth and constant for each stroke rate.
4. Compare with a good shock absorber.
5. If one of the following is observed, replace the shock absorber.
   - A skip or lag at reversal near mid-stroke.
   - A seize (except at the extreme ends of travel).
   - A noise (grunt or squeal) after completing one full stroke in both directions.
   - A clicking noise at fast reversal.

BENCH TEST—NON SPIRAL GROOVE RESERVOIR SHOCK ABSORBERS

- Purging air from non-spiral groove shock absorbers is not necessary. These shock absorbers have a gas-filled cell in their reservoirs (as opposed to the air-filled cell in the spiral groove shock absorber reservoirs).
  1. Place the shock absorber in a vise with jaws clamped on the shock absorber's top mounting stud.
     - Shock absorber should be held vertically in the vise—bottom end up.
     - Do not clamp vise jaws on the shock absorber's upper stem threads or reservoir.
  2. Pump the shock absorber at various rates of speed and observe the rebound force.
     - Rebound force is normally stronger than compression force (approximately two to one).

- Rebound force should be smooth and constant for each stroke rate.

3. Compare with a good shock absorber.
4. *If one of the following are observed, replace* the shock absorber.
   - A skip or lag at reversal near mid-stroke.
   - A seize (except at the extreme ends of travel).
   - A noise (grunt or squeal) after completing one full stroke in both directions.
   - A clicking noise at fast reversal.

ON-VEHICLE TEST

The shock absorbers may be tested in the same way as the bench test after removing the top mount.

DIAGNOSIS OF WHEEL BEARINGS

When diagnosing bearing condition, keep in mind the general condition of all parts during disassembly and inspection. Use figures 5, 6, to classify the problem, and follow the recommended correction procedure.

TAPERED ROLLER BEARING DIAGNOSIS

Consider the following factors when diagnosing bearing condition:
1. General condition of all parts during disassembly and inspection.
2. Classify the failure with the aid of the illustrations.
3. Determine the cause.
4. Make all repairs following recommended procedures.

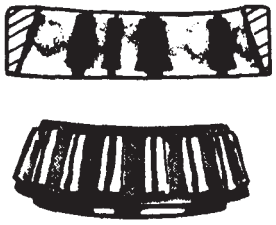

ABRASIVE ROLLER WEAR

Pattern on races and rollers caused by fine abrasives.
Clean all parts and housings, check seals and bearings and replace if leaking, rough or noisy.

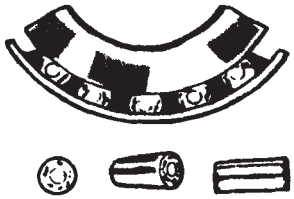

GALLING

Metal smears on roller ends due to overheat, lubricant failure or overload.
Replace bearing, check seals and check for proper lubrication.

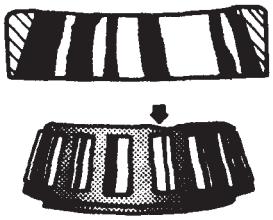

BENT CAGE

Cage damaged due to improper handling or tool usage.
Replace bearing.

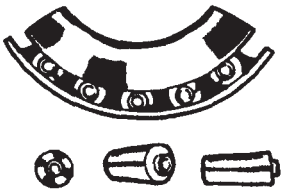

ABRASIVE STEP WEAR

Pattern on roller ends caused by fine abrasives.
Clean all parts and housings, check seals and bearings and replace if leaking, rough or noisy.

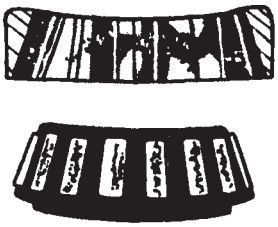

ETCHING

Bearing surfaces appear gray or grayish black in color with related etching away of material usually at roller spacing.
Replace bearings, check seals, and check for proper lubrication.

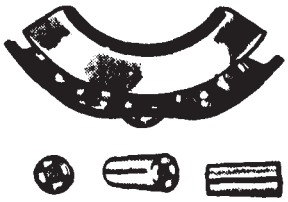

BENT CAGE

Cage damaged due to improper handling or tool usage.
Replace bearing.

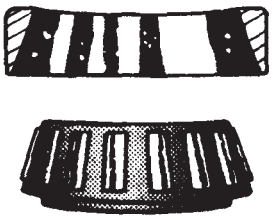

INDENTATIONS

Surface depressions on race and rollers caused by hard particles of foriegn material.
Clean all parts and housings. Check seals and replace bearings if rough or noisy.

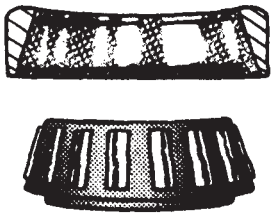

MISALIGNMENT

Outer race misalignment due to foreign object.
Clean related parts and replace bearing. Make sure races are properly sealed.

F9315

Figure 5—Diagnosis of Front Wheel Bearings

Diagnosis of Tapered Roller Bearings (con't)

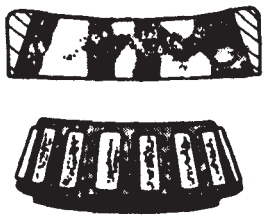

FATIGUE SPALLING

Flaking of surface metal resulting fron fatigue.
Replace bearing, clean all related parts.

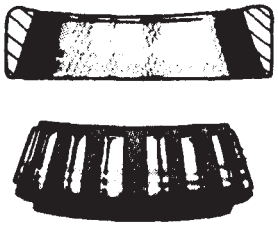

STAIN DISCOLORATION

Discoloration can range fron light brown to black caused by incorrect lubricant or moisture.
Re-use bearings if stains can be removed by light polishing or if no evidence of overheating is observed.
Check seals and related parts for damage.

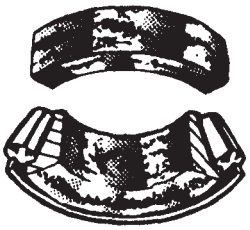

FRETTAGE

Corrosion set up by small relative movement of parts with no lubrication.
Replace bearing. Clean related parts.
Check seals and check for proper lubrication.

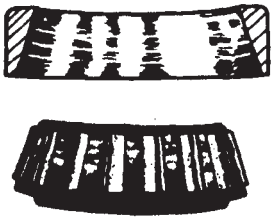

CAGE WEAR

Wear around outside diameter of cage and roller pockets caused by abrasive material and inefficient lubrication.
Clean related parts and housings.
Check seals and replace bearings.

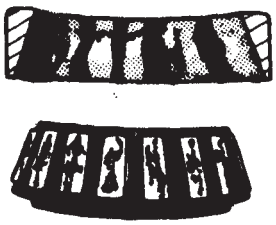

HEAT DISCOLORATION

Heat discoloration can range from faint yellow or dark blue resulting from overload or incorrect lubricant. Excessive heat can cause softening of races or rollers. To check for loss of temper on races or rollers a simple file test may be made. A file drawn over a tempered part will grab and cut metal, whereas, a file drawn over a hard part will glide readily with no metal cutting.
Replace bearings if overheating damage is indicated.
Check seals and other parts.

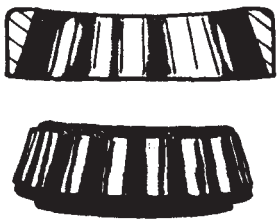

BRINELLING

Surface indentations in raceway caused by rollers either under impact loading or vibration while the bearing is not rotating.
Replace bearing if rough or noisy.

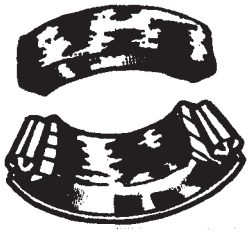

SMEARS

Smearing of metal due to slippage. Slippage can be caused by poor fits, lubrication, overheating, overloads or handling damage.
Replace bearings, clean related parts and check for proper fit and lubrication.

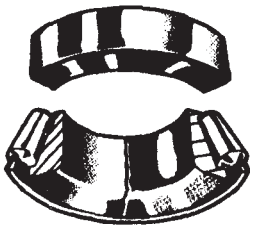

CRACKED INNER RACE

Race cracked due to improper fit, cocking, or poor bearing seats.
Replace bearing and correct bearing seats.

F9314

Figure 6—Diagnosis of Front Wheel Bearings

ON-VEHICLE SERVICE: TWO-WHEEL DRIVE FRONT SUSPENSION

WHEEL BEARING ADJUSTMENT

Important

- The proper functioning of the front suspension cannot be maintained unless the front wheel bearings are correctly adjusted. The bearings must be a slip fit on the spindle and the inside diameter of the wheel bearing must be lubricated to ensure the bearings will creep. The spindle nut must have a free-running fit on the spindle threads.

NOTICE: Never preload the front wheel bearings. Damage can result from the steady load on the roller ends which comes from preloading.

Remove or Disconnect (Figure 7)

- Raise the vehicle and support it with suitable safety stands.

1. Wheel cover if used.
2. Cap (10) from the tub.
3. Cotter pin (11).

NOTICE: See "Notice" on page 3C-1.

Tighten

- Nut (12) to 16 N·m (12 ft. lbs.) while turning the wheel forward by hand. This will seat the bearings.

Adjust

- Nut (12) to a "just loose" position by hand, then back the nut (12) off until the hole in the spindle aligns with a slot in the nut. DO NOT BACK THE NUT (12) OFF MORE THAN 1/2 FLAT.

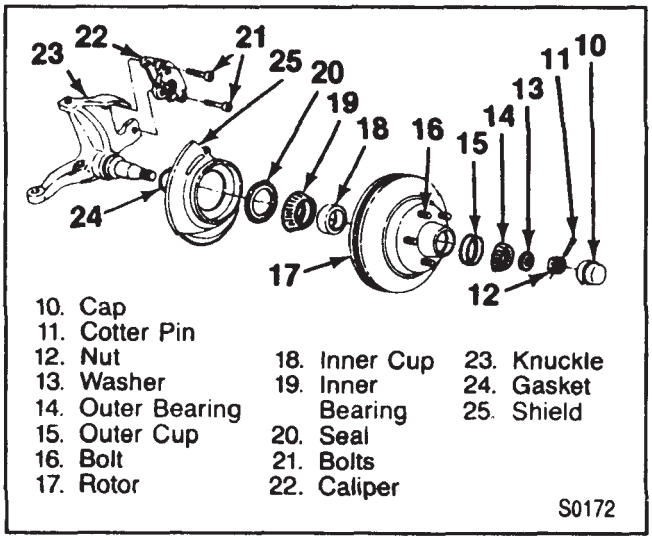

Figure 7—Rotor, Knuckle, and Bearing Components

Install or Connect (Figure 7)

1. New cotter pin (11).
   - Be sure the cotter pin (11) ends do not interfere with the cap (10). Bend the ends of the cotter pin (11) against the nut (12) and cut off any extra pin length.

Measure

- The endplay in the rotor (17). Proper endplay is 0.03 to 0.13 mm (0.001 to 0.005 inch).

2. Cap (10) to the rotor (17).
3. Wheel cover, if used.
   - Lower the vehicle.

ROTOR, BEARING AND SEAL REPLACEMENT

Remove or Disconnect (Figure 7)

Tool Required:
J 29117-A Wheel Bearing Cup Remover

1. Caliper. Refer to BRAKES (SECTION 5).

Important

- Support the caliper with a piece of wire to prevent damage to the brake line.

2. Cap (10) from the rotor (17).
3. Cotter pin (11), nut (12), and washer (13).
4. Rotor (17) from the spindle.
   - Be careful not to damage the outer bearing (14) and the spindle threads.
5. Outer bearing (14).
6. Seal (20).
   - Pry the seal (20) out and discard.
7. Inner bearing (19). Use J 29117-A to remove the inner cup (18), figure 8.

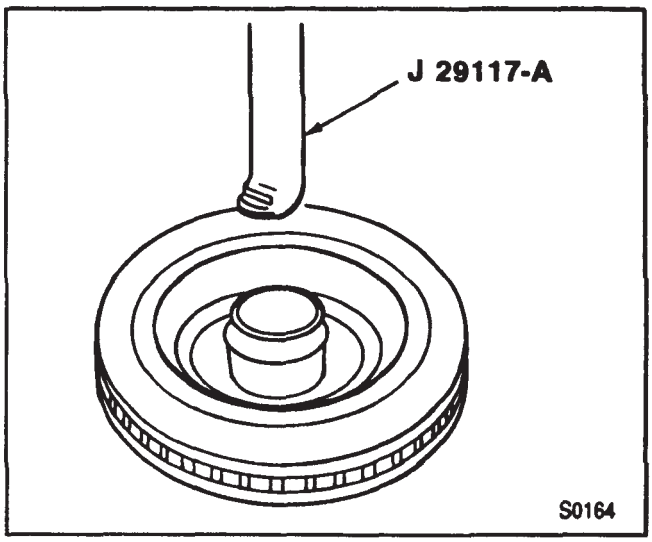

Figure 8—Removing Bearing Cup

Clean

- All parts in a solvent and air dry. Do not spin the bearings with compressed air.
- Be sure all parts are clean and free of grease.

Inspect

- Rotor (17). Refer to BRAKES (SECTION 5).
- Bearings (14 and 19) and races for a cracked cage, worn or pitted rollers, cracks scores or a brinelled condition. Refer to "Diagnosis of Wheel Bearings" in this section. Replace parts as necessary.

Install or Connect (Figure 7)

Important

- Apply an approved high temperature front wheel bearing grease to the spindle at the inner and outer bearing seat, shoulder and seal seat. Also finger apply a small amount of grease inboard of each bearing cup (15 and 18) in the rotor (17). Pressure pack the bearings (14 and 19) with a greasing machine or hand pack them, making sure the grease is worked thoroughly into the rollers, cone and the cage.

1. Inner bearing (19) to the rotor (17).
   - Apply an additional quantity of grease outboard of the inner bearing (19).
2. Seal (20).
   - Lubricate the seal (20) lip.
   - Use a flat plate to press the seal (20) down flush with the hub.
   - Seat the outer bearing (14) and cup (15).
3. Rotor (17) to the spindle.
   - Be careful not to scuff the spindle threads.
4. Outer bearing (14) to the rotor (17).
5. Washer (13).
6. Nut (12).

NOTICE: See "Notice" on page 3C-1.

Tighten

- Nut (12) to 16 N·m (12 ft. lbs.) while turning the wheel assembly forward by hand. Apply grease to the outboard side of the outer bearing (14).

Important

- Adjust the wheel bearings. Refer to "Wheel Bearing Adjustment" in this section.

7. Caliper (22). Refer to BRAKES (SECTION 5).

WHEEL HUB BOLT REPLACEMENT

Remove or Disconnect (Figure 9)

- Raise the vehicle and support it with suitable safety stands.

1. Wheel assembly.
2. Rotor. Refer to "Rotor, Bearing and Seal Replacement" in this section.
3. Bolt.
   - Press the bolt out using an arbor press.
   - Be careful not to damage the wheel mounting surface on the hub flange.

Install or Connect (Figure 9)

1. Bolt into the hole in the tub.
   - Start the serrated bolt into the hole in the nub by tapping lightly with a hammer.
   - Make sure the bolt is square with the hub before pressing on the arbor.
2. Rotor. Refer to "Rotor, Bearing and Seal Replacement" in this section.
3. Wheel assembly.

- Lower the vehicle.

SHOCK ABSORBER REPLACEMENT

Remove or Disconnect (Figure 10)

- Raise the vehicle and support it with suitable safety stands.

1. Nut (30).
   - Hold the shock absorber stem (33) with a wrench while backing the nut (30) off.
2. Retainer (31).
3. Grommet (32).
4. Bolts (38).
   - Pull the shock absorber (36) out from below.
   - Lower grommet (34) and retainer (35) are on the stem (33).
   - Replace parts as necessary.

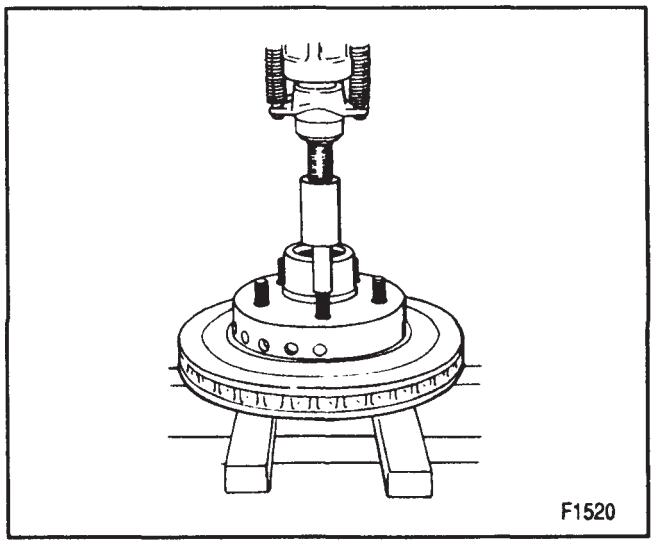

Figure 9—Removing the Hub Bolts

5. Nuts (41), if damaged or worn.

Install or Connect (Figure 10)

1. Retainer (35) and grommet (34) on the stem (33).
   - Fully extend the stem (33).
2. Shock absorber (36) up through the lower control arm (40) and spring (37).
   - Insert the stem (33) end through the hole in the upper control arm frame bracket (42).
3. Grommet (32) to the stem (33).
4. Retainer (31) to the stem (33).
5. Nut (30).

NOTICE: SEE "Notice" on page 3C-1

Tighten

- Nut (30) to 11 N·m (8 ft lbs.). while holding the stem (33) with a wrench.

6. New nuts (41) if needed.
7. Bolts (38) through pivot (39) holes to the lower control arm holes.

Tighten

- Bolts (38) to 27 N·m (20 ft. lbs.).
- Lower the vehicle.

STABILIZER SHAFT (BAR) REPLACEMENT

Remove or Disconnect (Figure 11)

- Raise the vehicle and support it with suitable safety stands.

1. Nut (50) from the link bolt (62).

Important

- Be sure to remove parts from both the right and left side of the vehicle and keep them separated.

2. Retainer (51).
3. Grommet (52).
4. Link bolt (62).
   - Grommet (54).
   - Retainer (55).
   - Spacer (56).
   - Retainer (57).
   - Grommet (58).
   - Grommet (60).
   - Retainer (61).
5. Bolts (63).
6. Bracket (64).
7. Stabilizer shaft (53).
8. Rubber bushing (65).

Inspect

- All parts for wear and damage.

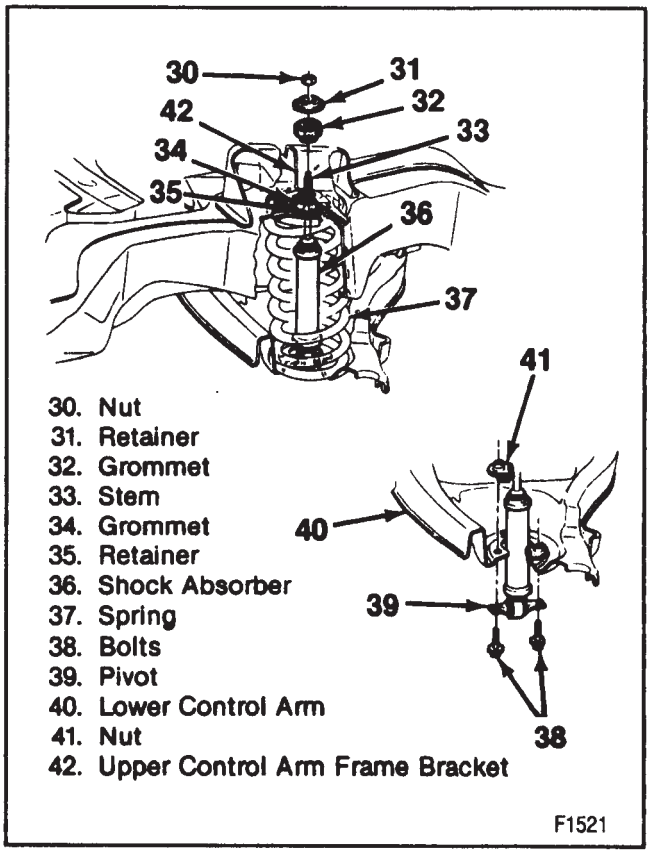

Figure 10—Shock Absorber Attachment

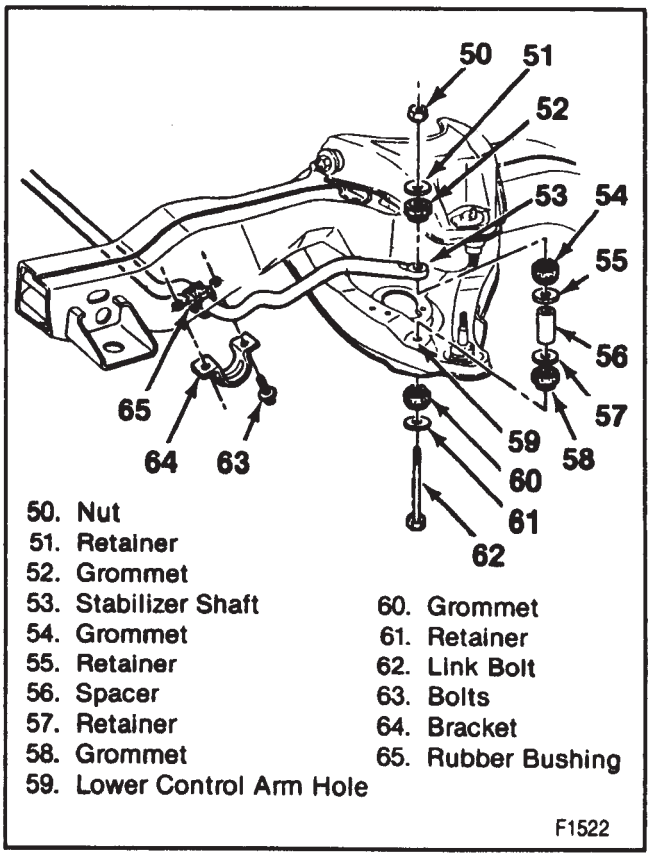

Figure 11—Stabilizer Shaft Components

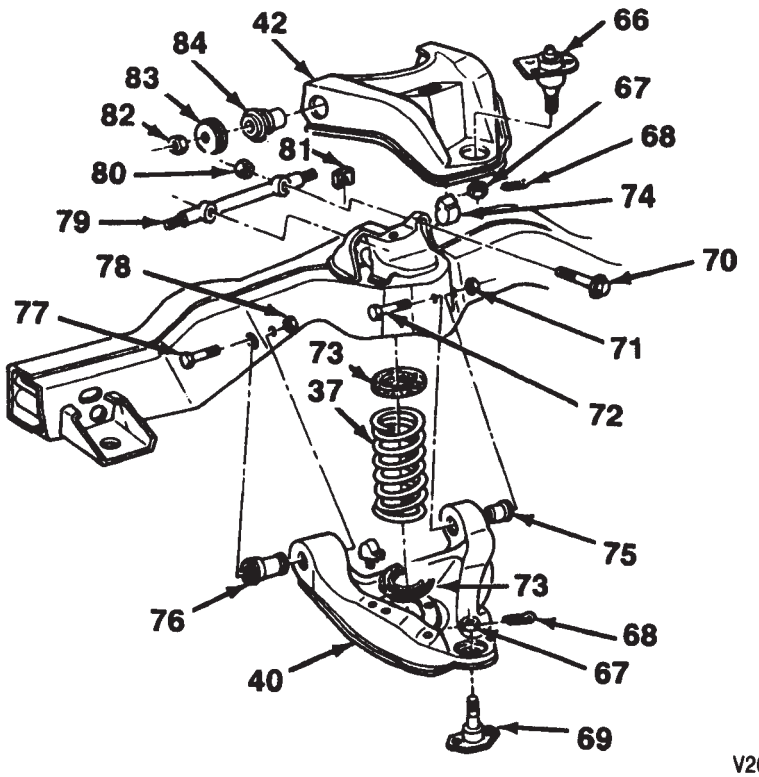

37. Coil Spring
40. Lower Control Arm
42. Upper Control Arm
66. Upper Ball Joint
67. Nut6
68. Cotter Pin
69. Lower Ball Joint
70. Bolt
71. Nut
72. Bolt
73. Insulator
74. Bumper
75. Bushing
76. Bushing
77. Bolt
78. Nut
79. Shaft
80. Nut
81. Shim
82. Nut
83. Retainer
84. Bushing

Figure 12—Control Arms and Components

Install or Connect (Figure 11).

NOTICE: For steps 4 and 9 see "Notice" on page 3C-1.

1. Rubber bushings (65) to the stabilizer shaft (53).
   - Be sure the bushings (65) are placed on the stabilizer shaft (53) with slits facing toward the front of the vehicle.
2. Stabilizer shaft (53).
3. Brackets (64) over the bushings (65) and the stabilizer shaft (53).
4. Bolts (63) to the brackets (64) and the frame.

Tighten

- Bolts (63) in four places to 33 N·m (24 ft. lbs.).

5. Retainers (61) and grommets (60) to the link bolts (62).
- Be sure of proper part positioning.
6. Link bolts (62) through the lower control arm hole (59) with the parts stacked properly.
- Grommets (58).
- Retainers (57).
- Spacers (56).
- Retainers (55).
- Grommets (54).
- Stabilizer shaft (53) holes.
7. Grommets (52).
8. Retainers (51).
9. Nuts (50).

Tighten

- Nuts (50) in two places to 18 N·m (13 ft. lbs.) until the nuts (50) meet the end of the bolt (62) threads for torque value. Lower the vehicle.

LOWER BALL JOINT REPLACEMENT

Remove or Disconnect (Figures 12, 13, 14 and 15)

Tools Required:
J 9519-D Ball Joint Remover and Installer Set
J 23742 Ball Joint Separator

- Raise the vehicle and support the frame with suitable safety stands.

1. Wheel and tire assembly.
   - Place a floor jack under the control arm spring seat and raise it until it supports the control arm.

CAUTION: Floor jack must remain under the control arm spring seat during removal and installation to retain the spring and control arm in position. Failure to do so could result in personal injury.

2. Caliper. Refer to BRAKES (SECTION 5).

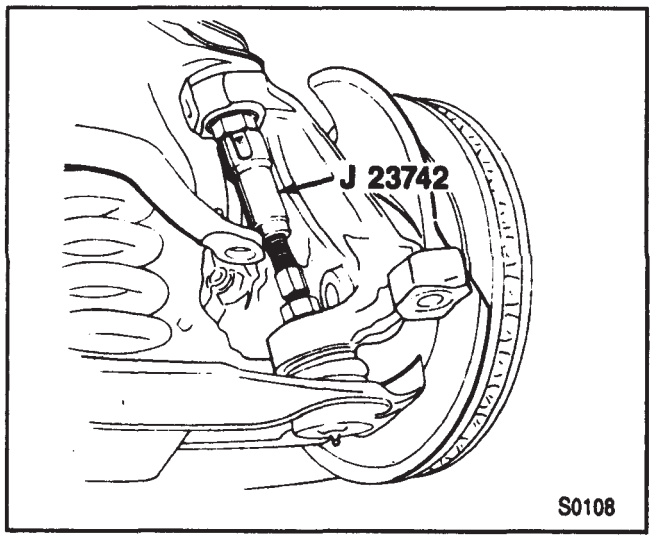

Figure 13—Disconnecting the Lower Ball Joint

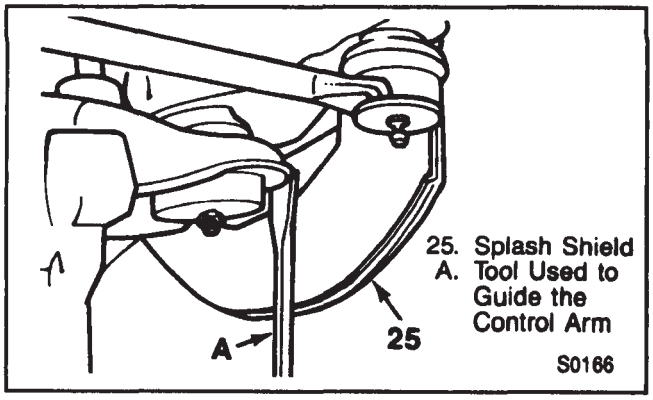

Figure 14—Guiding the Lower Control Arm Past the Splash Shield

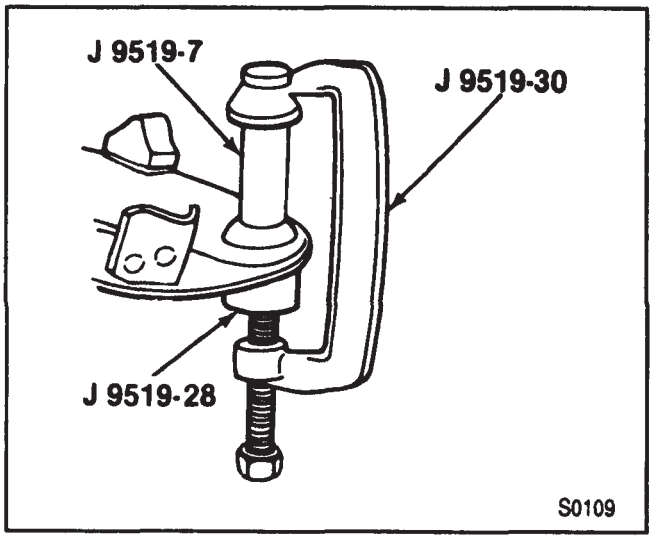

Figure 15—Removing the Lower Ball Joint

Important

- Support the caliper with a piece of wire to prevent damage to the brake line.

3. Cotter pin (68) and the nut (67).

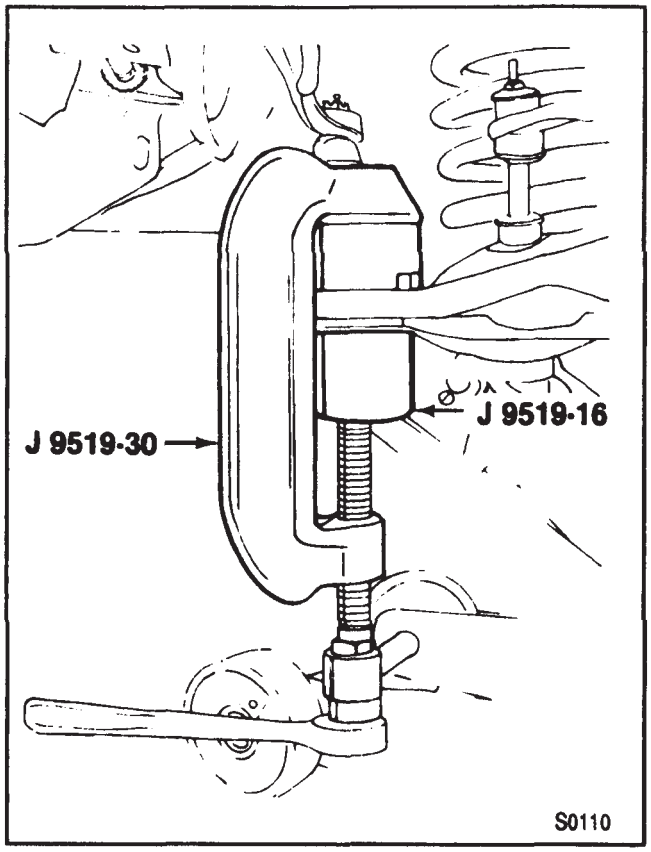

Figure 16-Installing the Lower Ball Joint

- Use J 23742 to break the ball joint loose from the knuckle (figure 13).

4. Lower control arm (40) out of the opening in the splash shield.
   - Use a putty knife or similar tool to guide control arm past splash shield (figure 14).

Important

- Block the knuckle assembly out of the way placing a wooden block between the frame and upper control arm.

5. Grease fittings.
6. Lower ball joint (69) from the lower control arm (40).
   - Use tools as shown in figure 15.
   - Replace parts as necessary.

Inspect

- The tapered hole in the steering knuckle and remove any dirt. If the hole is out of round, deformed or damaged, the knuckle must be replaced.

Install or Connect (Figures 12, 14 and 16)

Tool Required:
J 9519-D Ball Joint Remover and Installer Set

1. New ball (69) joint into the lower control arm (40).
   - Press in the ball joint using tools in figure 16. The ball joint will bottom on the control arm.

- Locate the grease seal facing inboard.

2. Ball joint stud into the steering knuckle.

NOTICE: See "Notice" on page 3C-1.

3. Stud nut (67) onto the stud.

Tighten

- Nut (67) to 113 N·m (83 ft. lbs.) and align the slot in the stud nut with the hole in the stud by tightening.

4. New cotter pin (68) to the stud.
5. Grease fittings.
   - Lubricate the ball joint until grease appears at the seal.
6. Caliper. Refer to BRAKES (SECTION 5).
7. Wheel and tire assembly.
   - Lower the vehicle.

Important

- Check the front end alignment. Refer to FRONT END ALIGNMENT (SECTION 3A).

UPPER BALL JOINT REPLACEMENT

- Raise the vehicle and support the lower control arm with floor stands.
- Since the weight of the vehicle is used to relieve to spring tension on the upper control arm, the floor stands must be positioned between the spring seats and the lower control arm ball joints for maximum leverage.

CAUTION: Floor jack or stand must remain under the control arm spring seat during removal and installation to retain the spring and control arm in position. Failure to do so could result in personal injury.

Install or Connect (Figures 12, 17, 18, 19, and 20)

Tool Required:
J 23742 Ball Joint Separator

1. Wheel and tire assembly.
2. Caliper. Refer to BRAKES (SECTION 5).

Important

- Support the caliper with a piece of wire to prevent damage to the brake line.

3. Cotter pin (68).
4. Stud nut (67) from the upper ball joint (66).
   - Use J 23742 as shown in figure 17.
   - Apply pressure on the tool until the stud breaks loose.
   - Remove J 23742.
   - Pull the stud away from the knuckle.
   - Support the knuckle assembly so that its weight will not damage the brake hose.
5. Rivets from the upper ball joint (66).

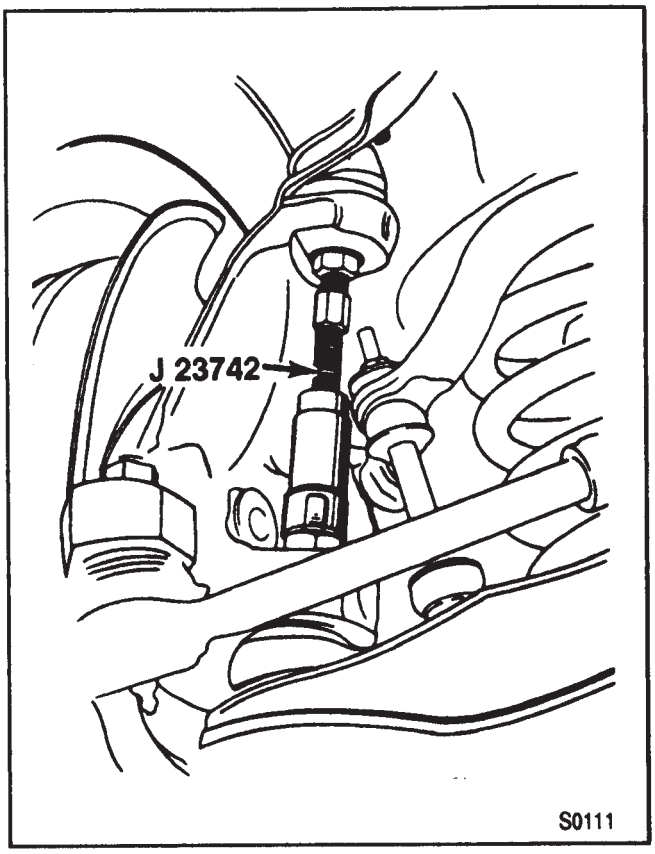

Figure 17—Disconnecting the Upper Ball Joint

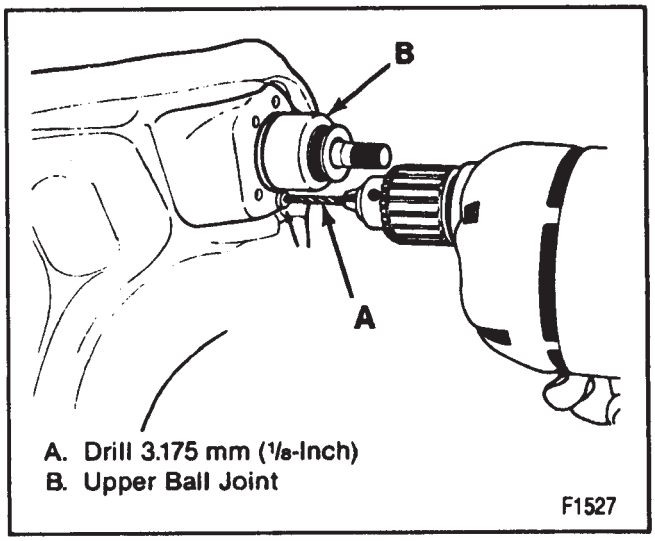

Figure 18—Drilling the Upper Ball Joint Rivets

- Use a 3.175 mm (1/8-inch) drill to cut a 6.35 mm (1/4-inch) deep hole in the center of each rivet (figure 18).
- Drill the rivet heads away using a 12.7 mm (1/2-inch) drill (figure 19).
- Punch the rivets out using a small pin punch (figure 20).

6. Upper ball joint (66).

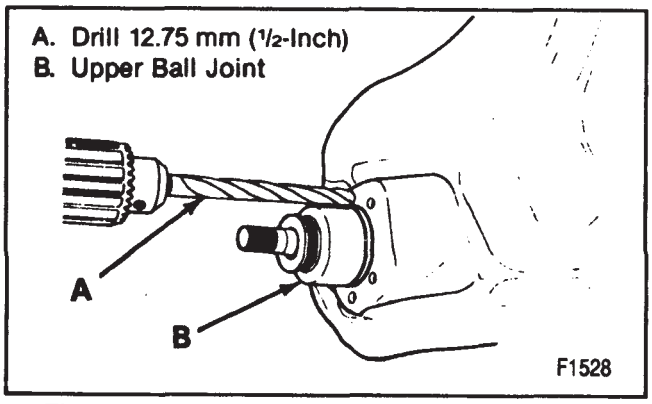

Figure 19—Drilling the Upper Ball Joint Rivet Heads

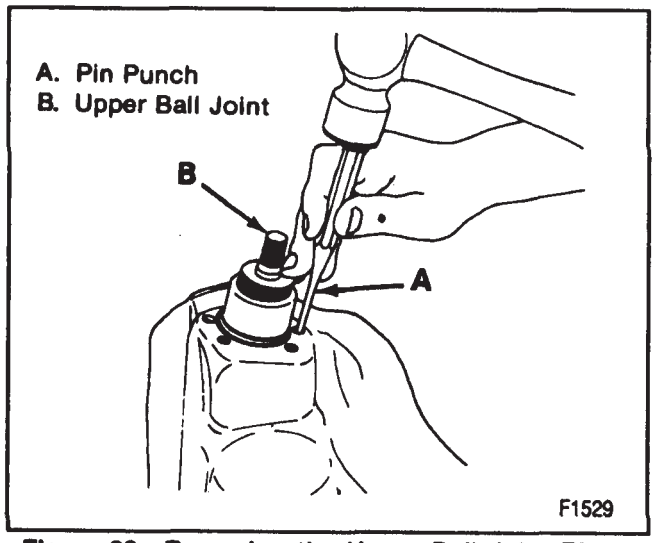

Figure 20—Removing the Upper Ball Joint Rivets

Install or Connect (Figures 12 and 21)

NOTICE: For steps 2 and 4, see "Notice" on page 3C-1.

1. New upper ball joint (66) to the upper control arm (42) (figure 21).
2. Position four attaching bolts and nuts (figure 21).

Tighten

- Nuts (A) to 23 N·m (17 ft. lbs.).
- Take the support away from the knuckle assembly.

3. Upper ball joint (66) to the steering knuckle.
4. Stud nut (67).

Tighten

- Nut (67) to 83 N·m (61 ft. lbs.).
- Align the slot in the stud nut with the hole in the stud by tightening the stud nut.

5. New cotter pin (68).
6. Grease fittings.
   - Lubricate the ball joint until grease appears at the seal.

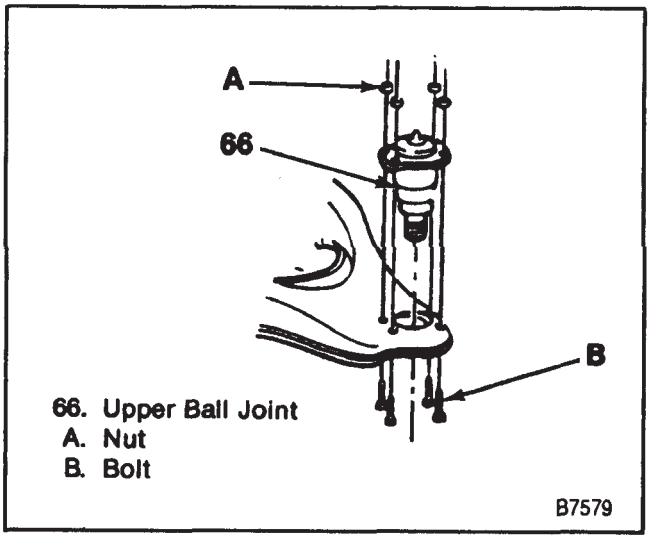

Figure 21—Installing the Upper Ball Joint

7. Caliper. Refer to BRAKES (SECTION 5).
8. Wheel and tire assembly.
   - Lower the vehicle.

Important

- Check the front end alignment. Refer to FRONT END ALIGNMENT (SECTION 3A).

STEERING KNUCKLE REPLACEMENT

Remove or Disconnect (Figures 7, 17, 22 and 23)

Tools Required:
J 6627-A or J 24319-01 Tie Rod Puller
J 23742 Ball Joint Separator

- Raise the front of the vehicle and place floor stands under the front lift points. Do not place the floor stands under the lower control arms because spring tension is needed to assist in breaking loose the ball joint studs.

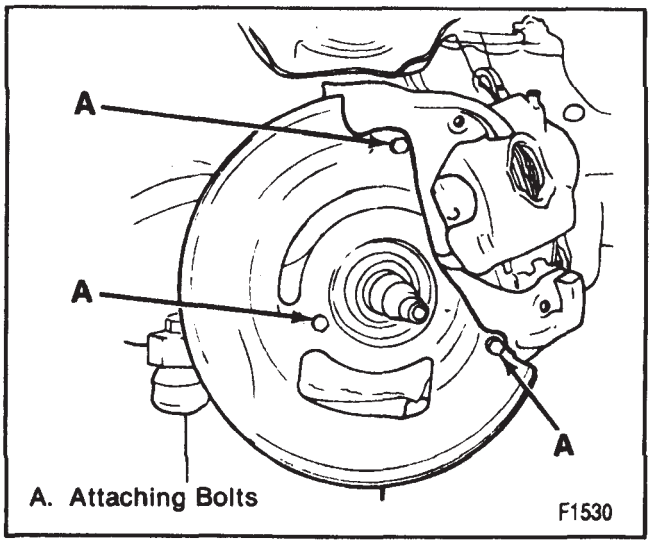

Figure 22—Splash Shield Attachment

1. Wheel and tire assembly.
2. Caliper. Refer to BRAKES (SECTION 5).

Important

- Support the caliper with a piece of wire to prevent damage to the brake line.

3. Rotor (17). Refer to "Rotor, Bearing and Seal Replacement" in this section.
4. Three bolts attaching the splash shield to the knuckle (23) (figure 22).
5. Nut (12).
6. Tie rod end from the knuckle (23) using J 6627-A or J 24319-01 (figure 23).
7. Knuckle seal (20) if the knuckle (23) is to be replaced.
   - Be careful not to damage the knuckle seal (20).
8. Ball studs from the knuckle (23) using J 23742 (figure 17).
   - Refer to ball joint replacement procedures in this section.

CAUTION: Floor jack must remain under control arm spring seat during removal and installation to retain the spring and control arm in position. Failure to do so could result in personal injury.

- Position a floor jack under the lower control arm near the spring seat. Raise the jack until it just supports the lower control arm.
- Raise the upper control arm and disengage the ball joint stud from the knuckle (23).

9. Knuckle (23) from the lower ball joint stud.

Clean

- The steering knuckle.

Inspect

- Steering knuckle tapered hole. If out-of-round, deformed, or damaged, the knuckle MUST be replaced.

Install or Connect (Figures 7, 22, and 24)

NOTICE: For Steps 4, 5, and 6 see "Notice" on page 3C-1.

Tool Required:
J 29193 Ball Joint Seating Tool

1. Upper and lower ball joints into the knuckle (23). Refer to "Ball Joint Replacement" in this section.
2. Knuckle seal (20) (figure 24).
3. Splash shield (25) to the knuckle (23).

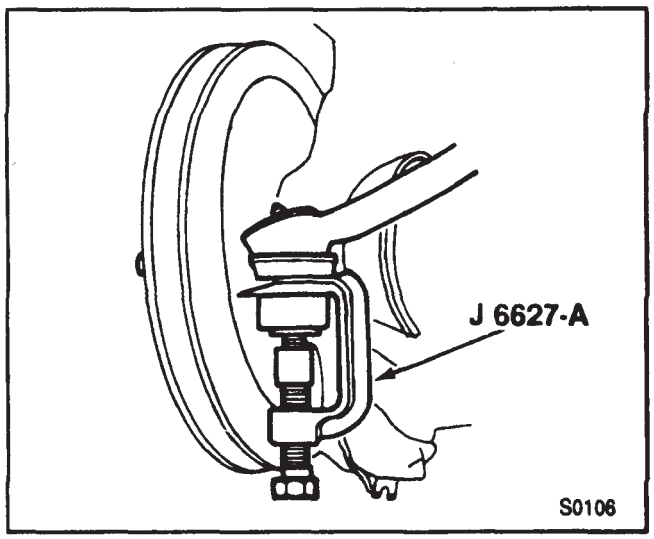

Figure 23—Removing the Tie Rod End

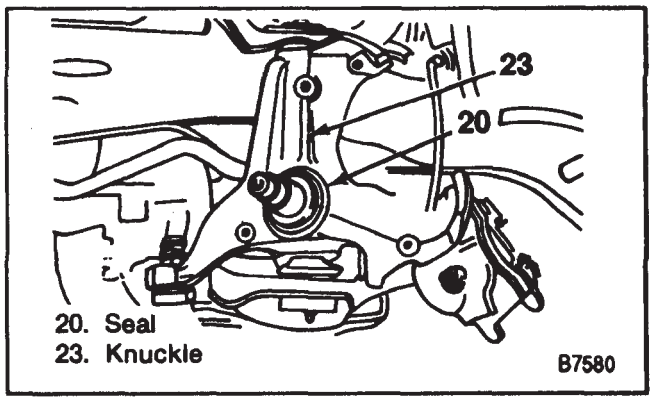

Figure 24—Locating the Seal on the Knuckle

4. Bolts (A) to the splash shield (25) (figure 22).

Tighten

- Bolts (A) to 14 N·m (124 in. lbs.).

5. Tie rod end into the knuckle (23) using J 29193.

Tighten

- J 29193 to 20 N·m (15 ft. lbs.) and remove the tool.

6. Nut.

Tighten

- Nut to 54 N·m (40 ft. lbs.).

7. Rotor (17). Refer to "Rotor, Bearing, and Seal Replacement" in this section.
   - Adjust the wheel bearing. Refer to "Wheel Bearing Adjustment" in this section.
8. Wheel and tire assembly.
9. Floor stands.
   - Lower the vehicle.
   - Check front alignment. Refer to FRONT END ALIGNMENT (SECTION 3A).

COIL SPRING REPLACEMENT

Remove or Disconnect (Figures 10, 11, 12, and 25)

Tool Required:
J 23028-01 Coil Spring Remover and Installer.

- Raise the vehicle on a hoist so that the control arms hang free.

1. Bolts (38) from the shock absorber pivot (39) (figure 10).
   - Push the shock absorber up through the lower control arm (40) and into the spring (37).
   - Cradle the inner control arm bushings using J 23028-01 secured to the end of a suitable jack (figure 25).
2. Stabilizer shaft from the lower control arm (figure 11).
   - Raise the jack to remove tension on the lower control arm pivot bolts (72 and 77).
   - Secure the control arm with a chain around the spring and through the control arm.
3. Pivot bolts (72 and 77) and nuts (71 and 78).
   - Take the rear pivot bolt (72) out first.
   - Lower the control arm (40) by lowering the jack.
   - When compression is removed from the coil spring, take the chain away.

Important

- Do not force the lower control arm and ball joint in order to remove the coil spring.

4. Coil spring (37) and the insulator (73).
   - Position the coil spring properly for easy removal.

Install or Connect (Figures 12, 25, 26, and 27)

Tool Required:
J 23028-01 Coil Spring Remover and Installer

1. Coil spring (37) and the insulator (73) on the lower control arm (40) (figure 26).

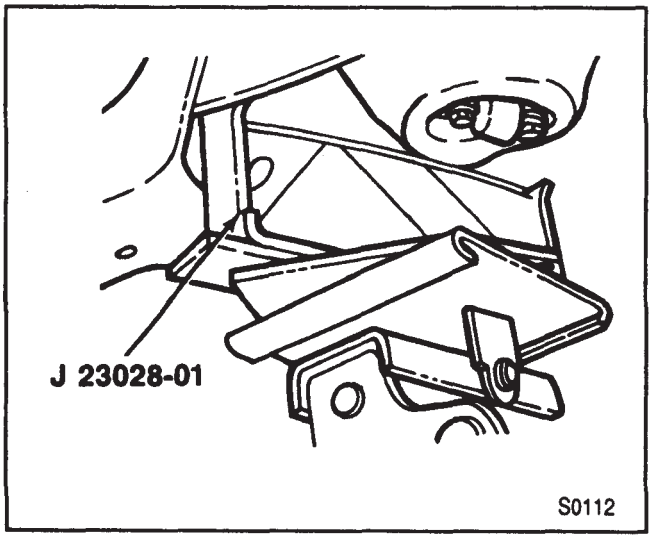

Figure 25—Cradling the Lower Control Arm Bushings

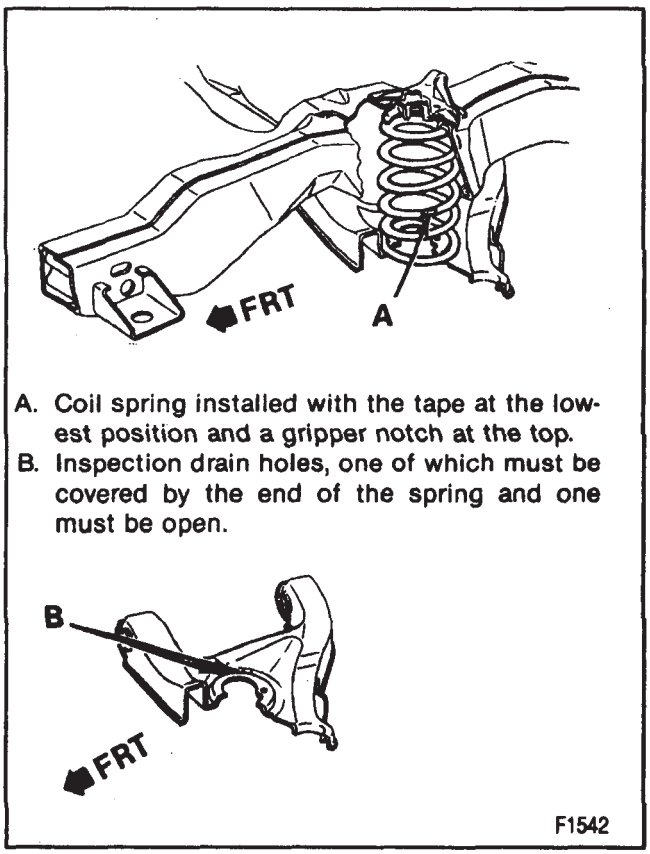

A. Coil spring installed with the tape at the lowest position and a gripper notch at the top.
B. Inspection drain holes, one of which must be covered by the end of the spring and one must be open.

Figure 26—Positioning the Coil Spring

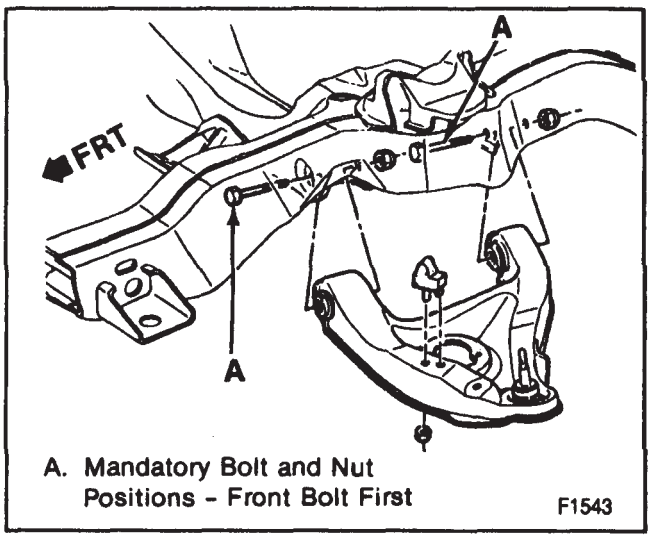

A. Mandatory Bolt and Nut Positions - Front Bolt First

Figure 27—Installing the Pivot Bolts and Nuts

- Be sure the spring insulator is on top.
- Use J 23028-01 to support the control arm (figure 25).

2. The lower control arm (40) in place on the frame.

NOTICE: See "Notice" on page 3C-1.

3. Pivot bolts (72 and 77) and new nuts (71 and 78).
   - Insert the front bolt (72) first.

Important

- In order to maintain adequate steering linkage clearance, refer to mandatory bolt direction of installation in figure 27.

Tighten

- Bolts and nuts to 27 N·m (20 ft. lbs.).

4. Stabilizer shaft. Refer to "Stabilizer Shaft Replacement" in this section.
5. Shock absorber. Refer to "Shock Absorber Replacement" in this section.
   - Lower the vehicle.

UPPER CONTROL ARM REPLACEMENT

Remove or Disconnect (Figures 12 and 28)

- Raise the front of the vehicle and support the lower control arm with floor stands. Since the weight of the vehicle is used to relieve the spring tension on the upper control arm, the floor stands must be positioned between the spring seats and the ball joints of the lower control arms for maximum leverage.

CAUTION: Floor jack must remain under control arm spring seat during removal and installation to retain spring and control arm in position. Failure to do so could result in personal injury.

1. Wheel and tire assembly.
2. Upper ball joint (66) from the steering knuckle (23). Refer to "Upper Ball Joint Replacement" in this section.

Important

- Support the rotor (17) assembly to prevent its weight from damaging the brake hose.

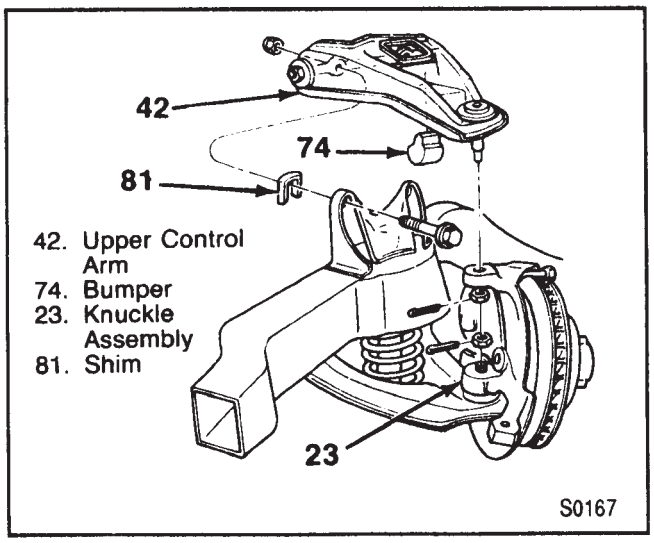

Figure 28—Removing the Upper Control Arm Bushing

3. Upper control arm attaching bolts (70) and nuts (80).
   - Note the location of any shims (81).
4. Upper control arm (42).

Inspect

- All parts for wear and damage.

Install or Connect (Figures 11 and 27)

1. Bolts (70) to the frame.
2. Upper control arm (42) to the bolts (70).

Important

- Left upper control arm shaft must have the depression facing inboard.

3. Shims (81) to their original position.

NOTICE: See "Notice" on page 3C-1.

4. Nuts (80).

Tighten

- Nuts (80) to 88 N·m 65 ft. lbs.).

5. Upper ball joint (66) to the steering knuckle (23). Refer to "Upper Ball Joint Replacement" in this section.
   - Take the temporary support away from the hub assembly.
6. Wheel and tire assembly.
   - Check front alignment. Refer to FRONT END ALIGNMENT (SECTION 3A).

LOWER CONTROL ARM REPLACEMENT

Remove or Disconnect (Figures 12, 14, and 29)

1. Coil spring. Refer to "Coil Spring Replacement" in this section.
2. Lower ball joint (69). Refer to "Lower Ball Joint Replacement" in this section.
   - Support the lower control arm (40) after the ball joint stud breaks loose.
   - Guide the lower control arm (40) out of the opening in the splash shield (figure 14).
3. Jam nuts (71 and 78).
4. Bolts (72 and 77).
5. Lower control arm (40).

Install or Connect (Figures 12 and 29)

1. Lower control arm (40) in place.
2. Bolts (72 and 77) with the head forward.

NOTICE: See Notice on page 3C-1.

3. New jam nuts (71 and 78) (figure 27).

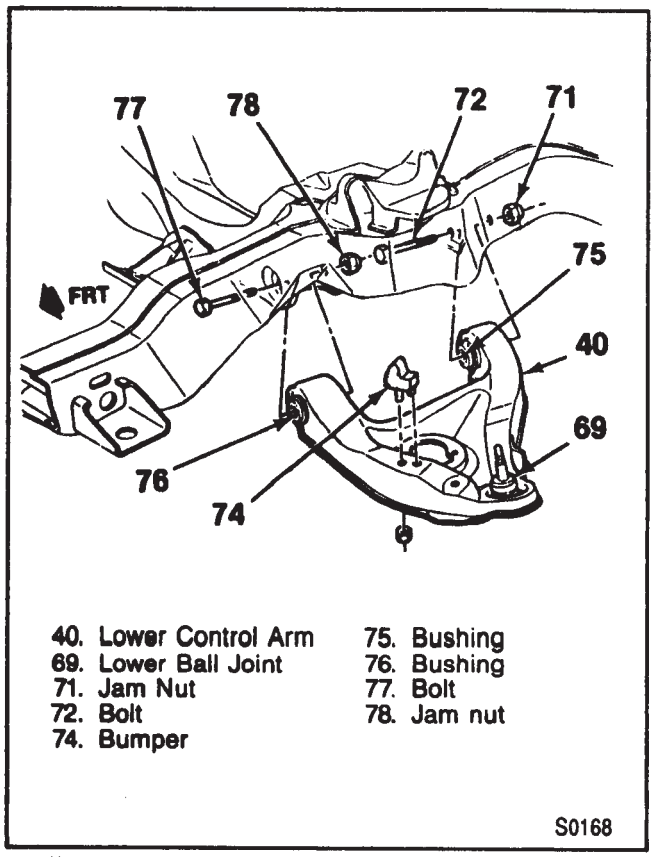

Figure 29—Removing the Lower Control Arm

Tighten

- Nut (78) to 127 N·m (94 ft. lbs.) and nut (71) to 90 N·m (66 ft. lbs.).

4. Lower ball joint (69) stud to the knuckle (23). Refer to "Lower Ball Joint Replacement" in this section.
5. Coil spring. Refer to "Coil Spring Replacement" in this section.
   - Check front alignment and adjust if necessary. Refer to FRONT END ALIGNMENT (SECTION 3A).

LOWER CONTROL ARM BUSHING REPLACEMENT

FRONT BUSHING

Remove or Disconnect (Figures 25, 29, and 30)

Tools Required:
J 21474-5 Receiver
J 21474-18 Special Nut
J 21474-19 Special Bolt
J 24174-23 Lower Control Arm Front Bushing Remover
J 22222-5 Control Arm Spacer

1. Lower control arm bolts (72 and 77).
   - Refer to "Coil Spring Replacement" steps 1, 2, and 3 in this section.
   - Drive the bushing flare down flush with the rubber part of the bushing, using a blunt chisel.
2. Front bushing (76).

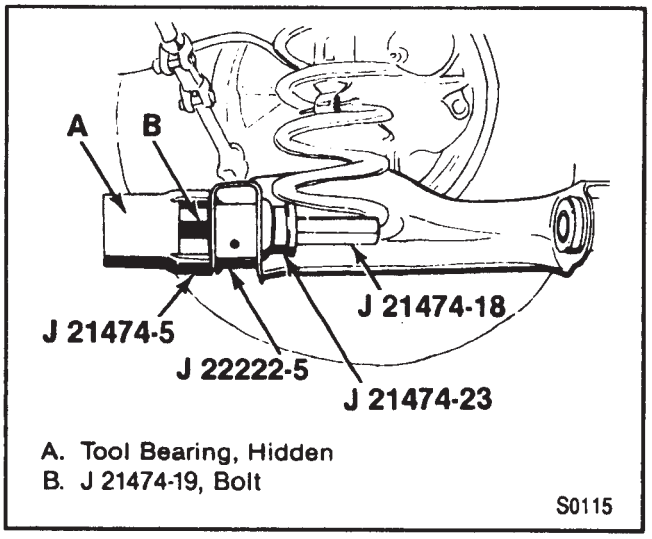

Figure 30—Removing the Lower Control Arm Front Bushing

- Install J 21474-5,-18,-19, and -23 plus J 22222-5 (figure 33).
- Tighten until the front bushing comes free.

Install or Connect (Figures 29 and 31)

Tools Required:
J 21474-2 Flaring Tool
J 21474-5 Receiver
J 21474-8 Front and Rear Lower Control Arm Bushing Remover and Installer
J 21474-12 Lower Control Arm Front Bushing Spacer
J 21474-13 Lower Control Arm Front and Rear Bushing Installer
J 21474-18 Special Nut
J 21474-19 Special Bolt
J 21474-20 Bushing Installer
J 22222-5 Lower Control Arm Front Bushing Spacer

1. Front bushing (76).

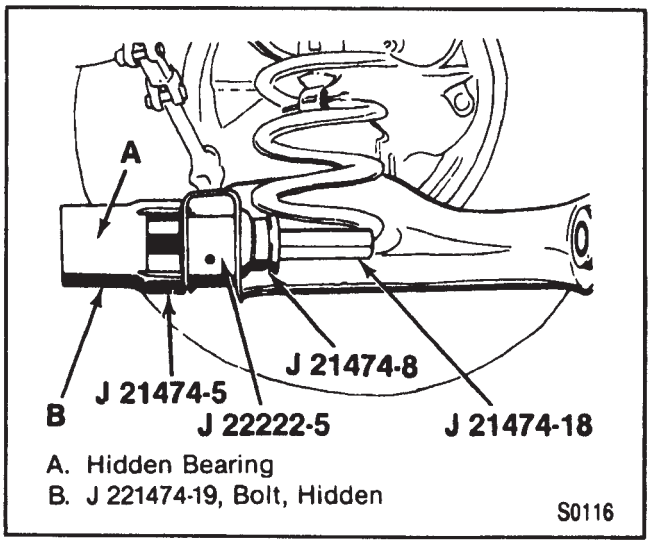

Figure 31—Installing the Lower Control Arm Front Bushing

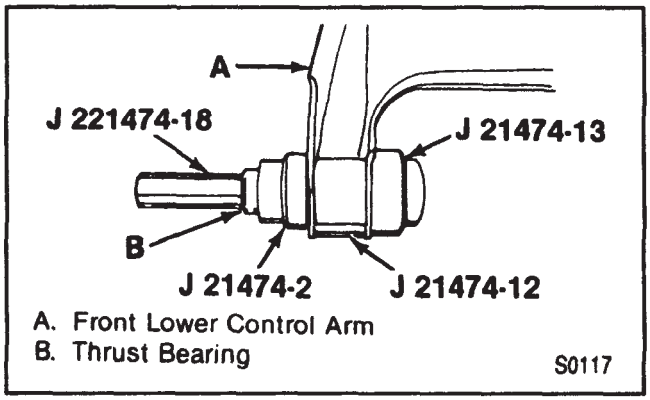

Figure 32—Flaring the Bushing

- Install tools as shown in figure 31. Lip is on the outside of the control arm (40).
- Tighten until the front bushing seats fully into the lower control arm (40). Remove the tools.
- Flare the front bushing (76) by installing J 21474-2, -12,-13, and -18 as shown in figure 32.
- Tighten until the bushing is flared to approximately 45 degrees and remove the tools.

2. Lower control arm bolts (72 and 77) to the vehicle.
   - Refer to "Coil Spring Replacement" in this section.

REAR BUSHING

Remove or Disconnect (Figures 29 and 33)

Tools Required:
J 21474-5 Receiver
J 21474-8 Lower Control Arm Front and Rear Bushing Remover
J 21474-12 Rear Lower Control Arm Bushing Installer Spacer
J 21474-18 Special Nut
J 21474-19 Special Bolt

1. Lower control arm (40).
   - Refer to "Lower Control Arm Replacement" in this section.
   - Place the lower control arm (40) in a vise.
2. Rear bushing (75).
   - Install J 21474-5,-8,-12,-18, and -19 (figure 33).
   - Tighten until the rear bushing (75) comes free.

Install or Connect (Figures 29 and 34)

Tools Required:
J 21474-2 Receiver
J 21474-12 Rear Lower Control Arm Bushing Installer Spacer
J 21474-18 Special Nut
J 21474-19 Special Bolt

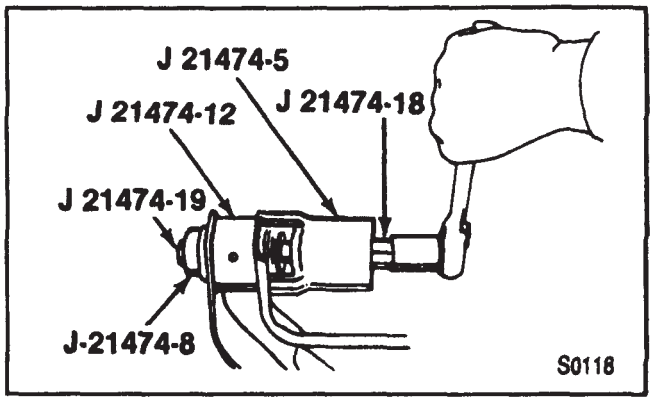

Figure 33—Removing the Lower Control Arm Rear Bushing

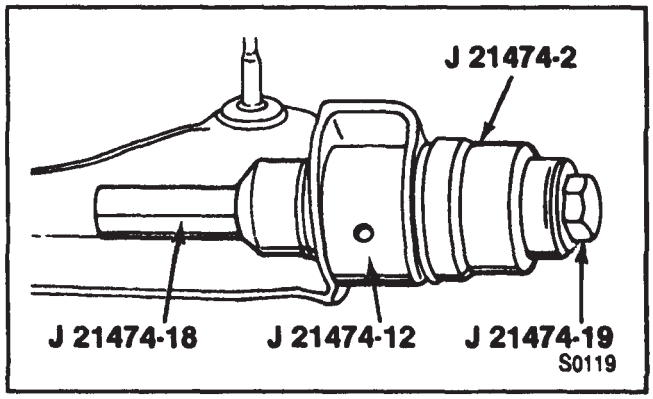

Figure 34—Installing the Lower Control Arm Rear Bushing

1. Rear bushing (75) into the lower control arm (40).
   - Install tools as shown in figure 34. (Lip is on the outside of the control arm).
   - Tighten until the rear bushing (75) seats fully into the lower control arm (40).
2. Remove the lower control arm (40) from the vise.
3. Lower control arm (40) to the vehicle.
   - Refer to "Lower Control Arm Replacement" in this section.

ON-VEHICLE SERVICE: FOUR-WHEEL DRIVE SUSPENSION

SHOCK ABSORBER REPLACEMENT

Remove or Disconnect (Figure 35)

- Raise the vehicle on a hoist.

1. Nut (92) and bolt (94).
   - Collapse the shock absorber (91).
2. Nut (90) and bolt (96).
3. Shock absorber (91).

Install or Connect (Figure 35)

1. Shock absorber (91) to the bracket (97).
2. Bolts (94 and 96).
   - Fit the bolts (94 and 96) in the direction shown (figure 33).

NOTICE: See "Notice" on page 3C-1.

3. Nuts (90 and 92) to the bolts (94 and 96).

Tighten

- Nut (90) to 73 N·m (54 ft. lbs.).
- Nut (92) and bolt (94) to 73 N·m (54 ft. lbs.) and lower the vehicle.

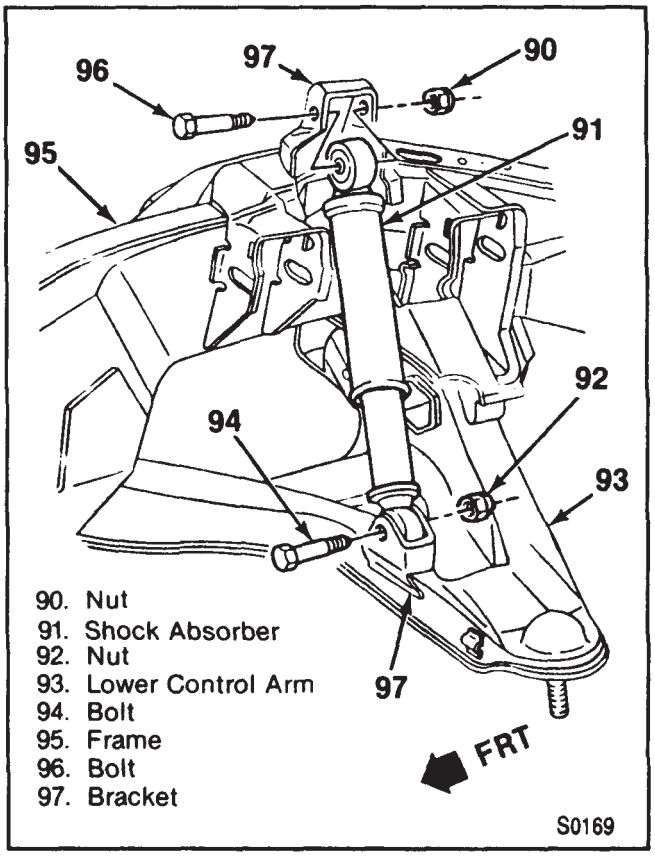

Figure 35—Shock Absorber Attachment

STABILIZER SHAFT (BAR) REPLACEMENT

Remove or Disconnect (Figure 36)

- Raise the vehicle and support it with suitable safety stands.

Important

- Be sure to remove parts from the right and left front of the vehicle and keep them separated.

1. Bolts (105).
2. Clamp (104).
3. Nuts (111).
4. Clamp (108).
5. Stabilizer shaft (107).
6. Insulators (106 and 110).

Inspect

- All parts for wear and damage.

Install or Connect (Figure 36)

NOTICE: For steps 4 and 6 see "Notice" on page 3C-1.

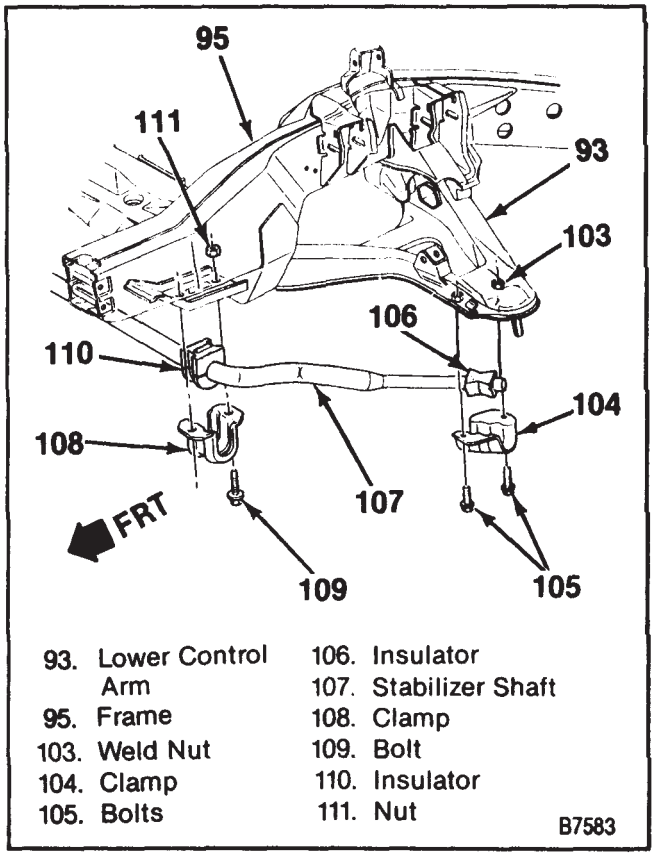

Figure 36—Stabilizer Shaft Components

- Unload the torsion bar. Refer to "Torsion Bar(s) and Support Assembly Replacement."

1. Insulators (106 and 110) to the stabilizer shaft *(107)*.
   - Be sure the slit in the insulator (110) faces forward.
2. Stabilizer shaft (107) to the frame (95) and lower control arm (93).
3. Clamp (104) to the insulator (106).
4. Bolts (105) to the weld nuts (103).

Tighten

- Bolts (105) to 33 N·m (24 ft. lbs.).

5. Clamp (108) to the insulator (110).
   - Make sure the slot in the insulator is facing forward.
6. Nuts (111).

Tighten

- Nuts (111) and bolts (109) to 48 N·m (35 ft. lbs.) Lower the vehicle.

Important

- Adjust the trim height of the vehicle. Refer to FRONT END ALIGNMENT (SECTION 3A).

DISC REPLACEMENT

Remove or Disconnect (Figure 37)

- Raise the vehicle and support it with suitable safety stands.

1. Wheel and tire.
2. Caliper (A). Refer to BRAKES (SECTION 5).
3. Disc (113).

Inspect

- All parts. Replace as necessary.

Install or Connect (Figure 37)

1. *Disc (113) to the hub and bearing assembly (114).*
2. Caliper (A). Refer to BRAKES (SECTION 5).

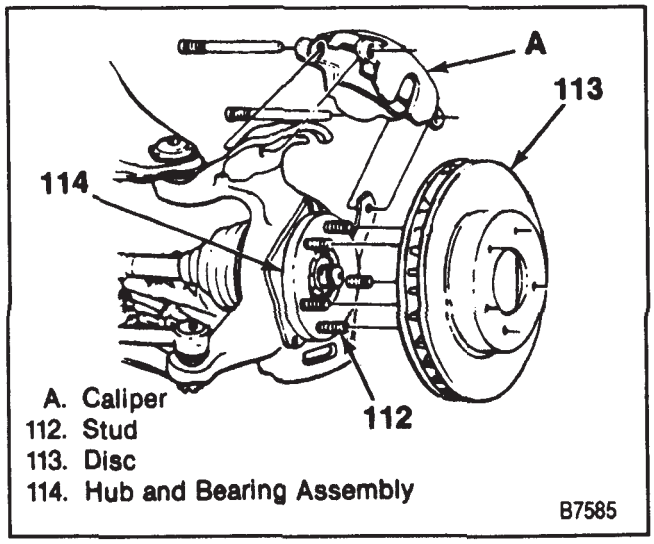

Figure 37—Removing the Disc

3. Tire and wheel.
   - Lower the vehicle.
   - Depress brake pedal.

WHEEL STUD REPLACEMENT

Remove or Disconnect (Figures 37 and 38)

Tool Required:
J 6627-A Wheel Stud Remover

- Raise the vehicle and support it with suitable safety stands.

1. Wheel and tire.
2. Caliper (A). Refer to BRAKES (SECTION 5).

Important

- Support the caliper with a piece of wire to prevent damage to the brake line.

3. Stud (112) using J 6627-A (figure 38).
   - Do not hammer on a wheel stud.

Install or Connect (Figures 37 and 39)

1. Stud (112) to the hub and bearing assembly (114).

NOTICE: See "Notice" on page 3C-1.

2. Four washers (A) and nut (B) to the stud, (figure 39).

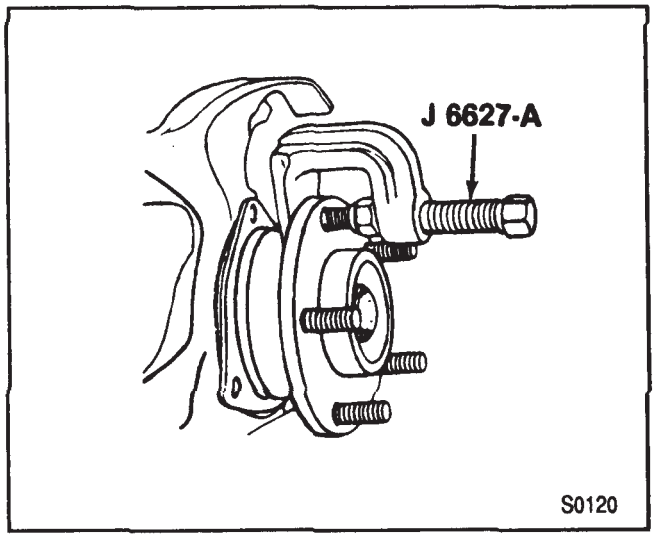

Figure 38—Removing the Wheel Studs

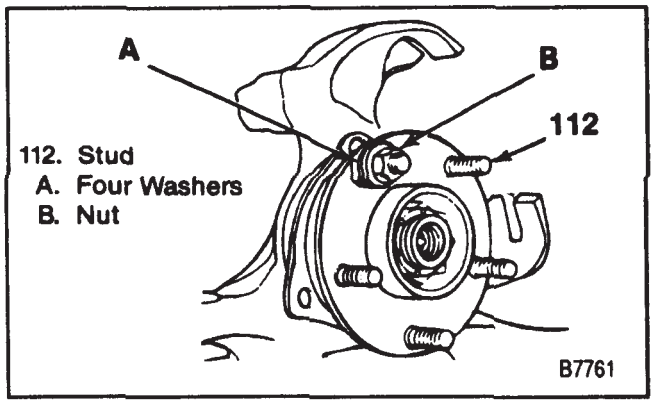

Figure 39—Installing the Wheel Studs

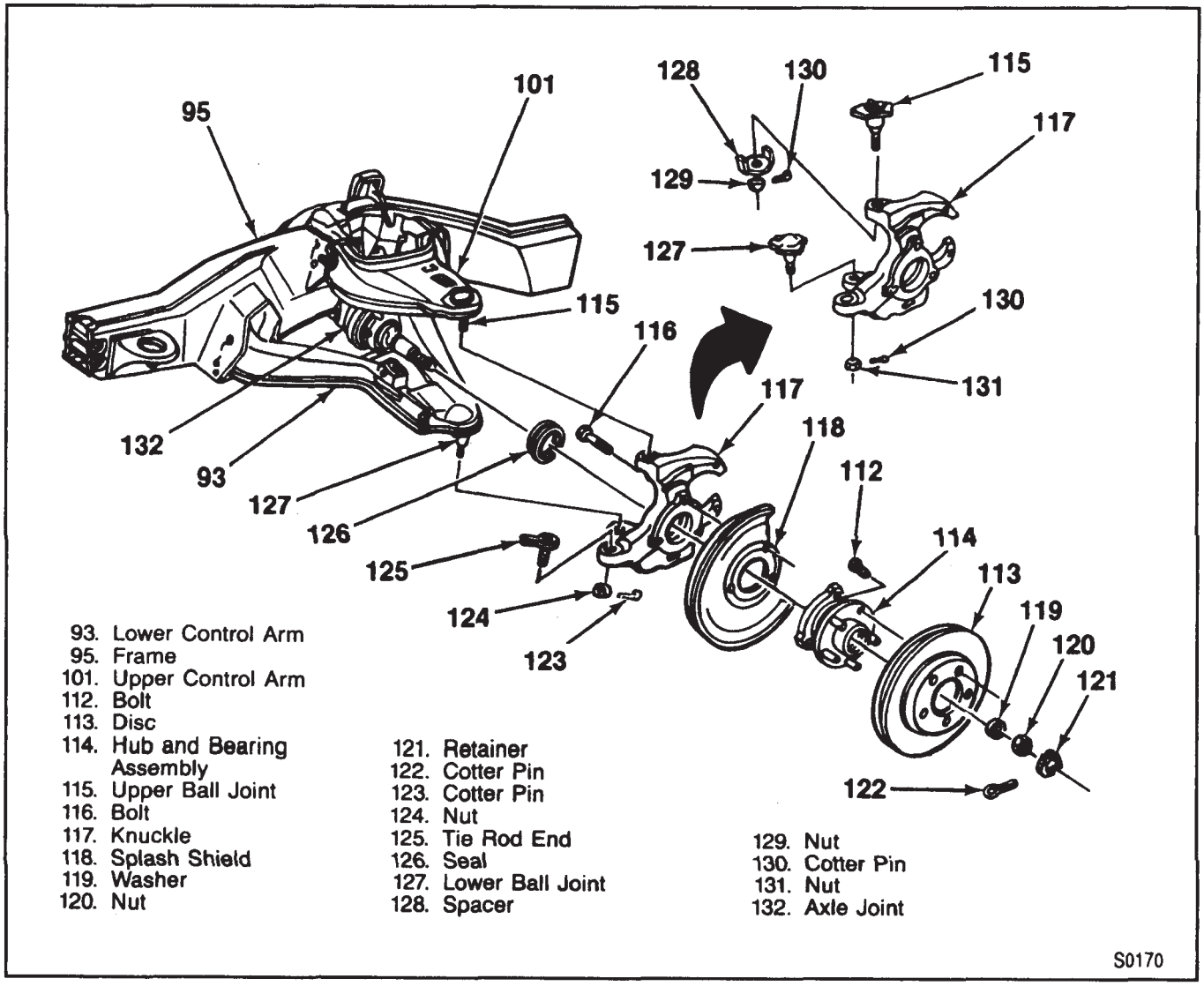

Figure 40—Hub, Knuckle, and Ball Joints

Tighten

- Nut (A). Draw the stud in.
- Remove the nut and washers.

3. Caliper (A). Refer to BRAKES (SECTION 5).
4. Tire and wheel.

- Lower the vehicle.

HUB AND BEARING, KNUCKLE AND SEAL ASSEMBLY REPLACEMENT

Remove or Disconnect (Figures 40 through 43)

Tool Required:
J 24319-01 Universal Steering Linkage Puller
J 28712 Axle Shaft Boot Seal Protector
J 34026 Ball Joint Separator

- Unload the torsion bar. Refer to "Torsion Bar(s) and Support Assembly Replacement."

1. Tire and wheel.
   - Install J 28712 to the constant velocity axle joint (132) (figure 41).
2. Caliper. Refer to BRAKES (SECTION 5).

Important

- Support the caliper with a piece of wire to prevent damage to the brake line.

3. Disc. Refer to "Disc Replacement."
4. Cotter pin (122).
5. Retainer (121).
6. Nut (120).
7. Washer (119).
8. Cotter pin (123).
9. Nut (124).
10. Tie rod end (125) from the knuckle (117) using J 24319-01 (figure 42).
11. Bolts (116).
12. Hub and bearing assembly (114).
13. Splash shield (118).
14. Cotter pins (130).
15. Ball joints (115 and 127) from the knuckle (117) using J 34026 (figure 43).

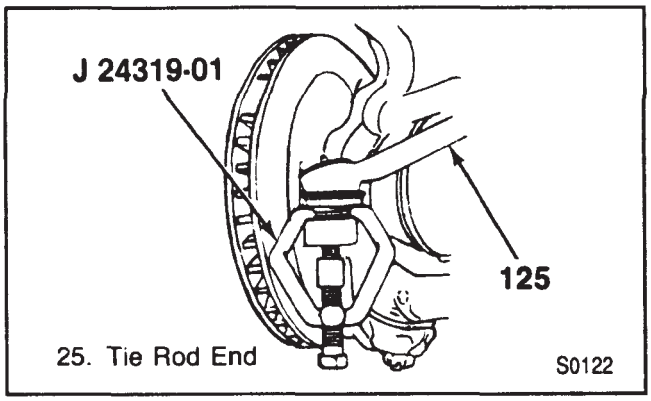

Figure 42—Removing the Tie Rod End

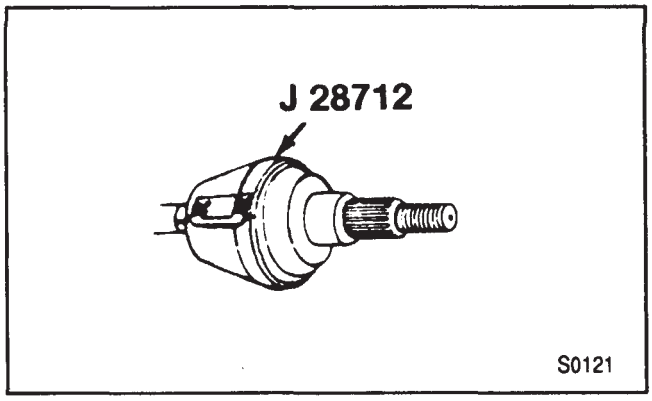

Figure 41—Installing the Drive Axle Cover

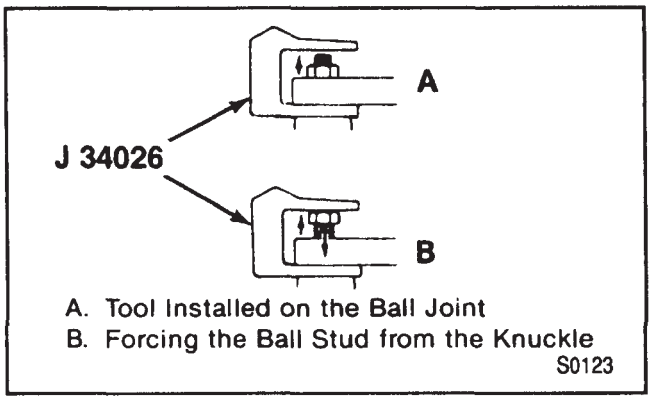

Figure 43—Disconnecting the Ball Joint

- Locate J 34026 on the ball joint and back off the nut (129, 131) until the ball stud is forced out of the knuckle.

16. Nuts (129 and 131).
17. Knuckle (117) from the ball joints.
18. Spacer (128) from the knuckle (117).
19. Seal (126) from the knuckle (117).

Install or Connect (Figure 40 and 43)

NOTICE: For steps 4, 8, 10, and 13 see "Notice" on page 3C-1.

Tool Required:
J 28574 Steering Knuckle Seal Installer

1. New seal (126) to the knuckle (117) using J 28574 (figure 44).
2. Spacer (128) to the knuckle (117).
3. Knuckle (117) to the upper and lower ball joints (115 and 127).
4. Nuts (129 and 131).

Tighten

- Nuts (129) to 83 N·m (61 ft. lbs.).
- Nut (131) to 113 N·m (83 ft. lbs.).
- Tighten the nuts to align the cotter pin. Do not tighten more than 1/6 turn.

5. New cotter pins (130).
   - Bend the pin ends against the nut flats.
6. Splash shield (118) aligned to the knuckle (117).
7. Hub and bearing assembly (114) (figure 40).
   - Align the threaded holes.
8. Bolts (116).

Tighten

- Bolts (116) to 116 N·m (86 ft. lbs.).

9. Tie rod end (125) to the knuckle (117).
10. Nut (124).

Tighten

- Nut (124) to 48 N·m (35 ft. lbs.).

11. New cotter pin.
    - Bend the pin ends against the nut flats.
12. Washer (119).
13. Nut (120).

Tighten

- Nut (120) to 245 N·m (181 ft. lbs.).

14. Retainer (121).
15. New cotter pin (122).
16. Disc (113). Refer to "Disc Replacement."
17. Caliper. Refer to BRAKES (SECTION 5).
    - Remove J 28712.
18. Tire and wheel.
    - Align the front end and check vehicle trim height. Refer to FRONT END ALIGNMENT (SECTION 3A).

BALL JOINT REPLACEMENT

Remove or Disconnect (Figures 40 and 45 through 47)

- Raise the vehicle and support it with suitable safety stands.

1. Tire and wheel.
2. Cotter pin (130).
3. Nut (129 or 131).
4. Ball joint (115 or 127) from the knuckle (117).
   - Support the knuckle.
5. Rivets from the ball joint (115 or 127).
   - Use a 3.175 mm (1/8-inch) drill to cut a 6.35 mm (1/4-inch) deep hole in the center of each rivet (figure 41).
   - Drill the rivet heads away using a 12.7 mm (1/2-inch) drill (figure 46).
   - Using a pin punch remove the rivets (figure 47).

6. Ball joint (115 or 127).

Install or Connect (Figures 40, 48 and 49)

NOTICE: For steps 2 and 4 see "Notice" on page 3C-1.

1. Ball joint (115 or 127) to the control arm.
2. Bolts (B) and nuts (A) to the ball joint (figures 48 or 49).

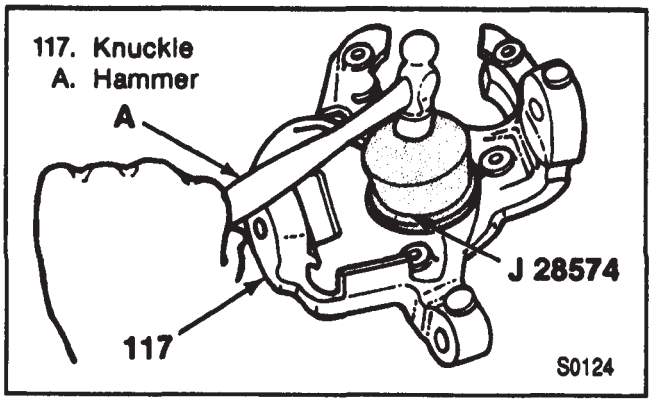

Figure 44—Installing the Knuckle Seal

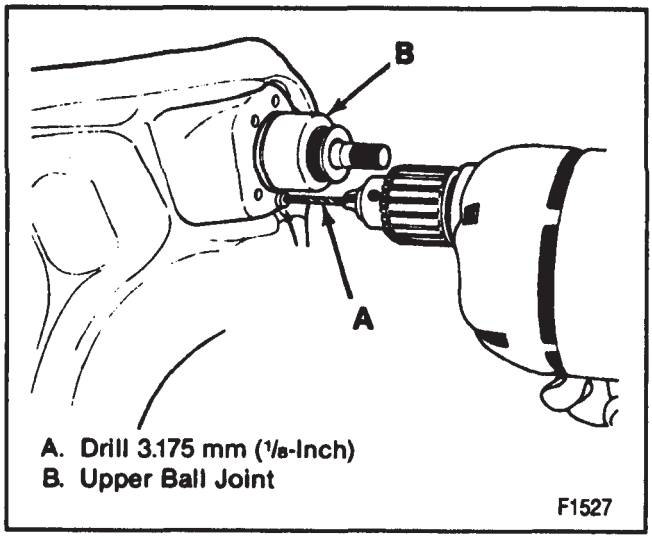

Figure 45—Drilling the Ball Joint Rivets

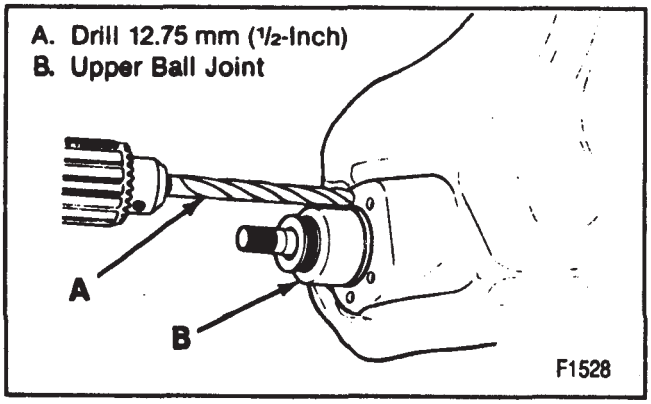

Figure 46—Drilling the Ball Joint Rivet Heads

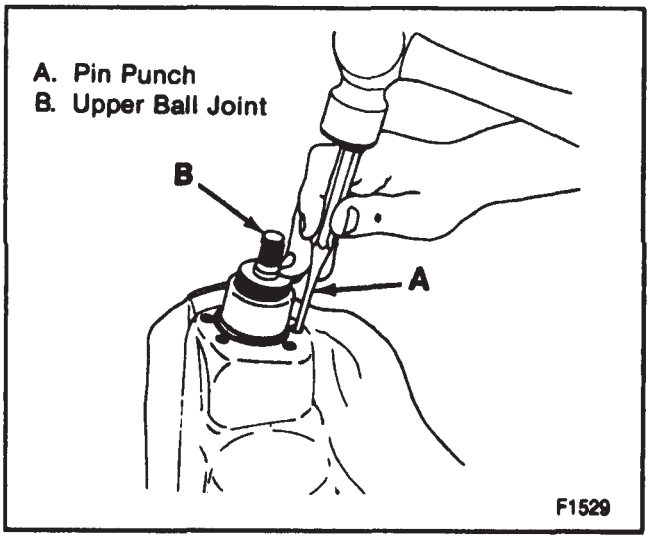

Figure 47—Removing the Ball Joint Rivets

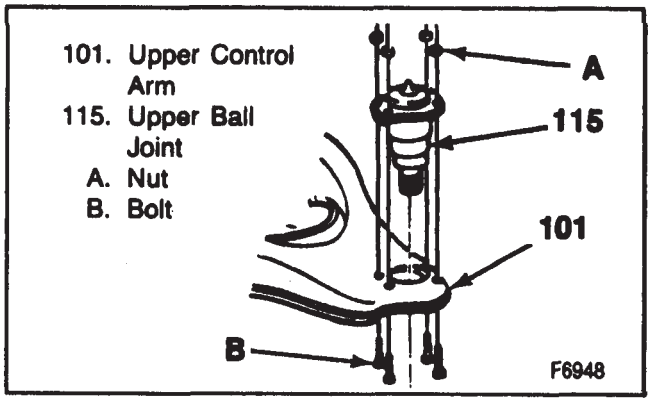

Figure 48—Installing the Upper Ball Joint

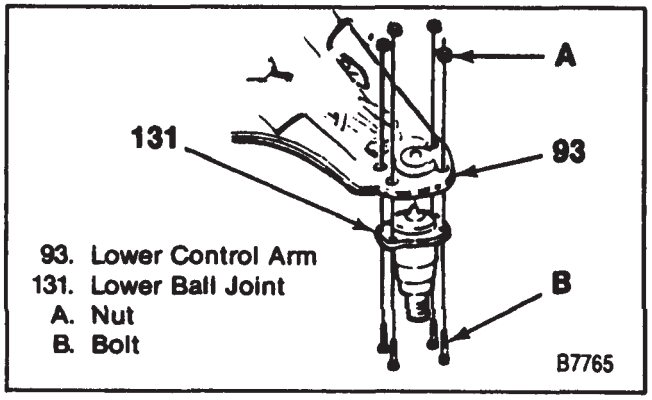

Figure 49—Installing the Lower Ball Joint

Tighten

- Nuts (A) to 23 N·m (17 ft. lbs.).

3. Ball joints (115 or 127) to the knuckle (117).
4. Nut (129 or 131).

Tighten

- Nut (129) to 83 N·m (61 ft. lbs.).
- Nut (131) to 113 N·m (83 ft. lbs.).

- Tighten the nut to align the cotter pin. Do not tighten more than 1/6 turn.

5. New cotter pin (130).
   - Bend the pin ends against the nut.
6. Tire and wheel.

- Lower the vehicle.
- Check front end alignment. Refer to FRONT END ALIGNMENT (SECTION 3A).

CONTROL ARM, BUSHING, AND BUMPER REPLACEMENT

UPPER CONTROL ARM

Remove or Disconnect (Figures 43, 50, and 51)

Tools Required:
J 21474-18 Nut
J 21474-19 Bolt
J 33793 Upper Control Arm Bushing Service Set

- Raise the vehicle and support it with suitable safety stands.

1. Tire and wheel.
   - Support the knuckle.
2. Cotter pin (130).
3. Nut (129). J 34026 to the knuckle (figure 43).
   - Back the nut off until the upper ball joint (115) separates.
   - Upper control arm (101) from the knuckle (117).
4. Nuts (145 and 154).
5. Cams (155 and 143).

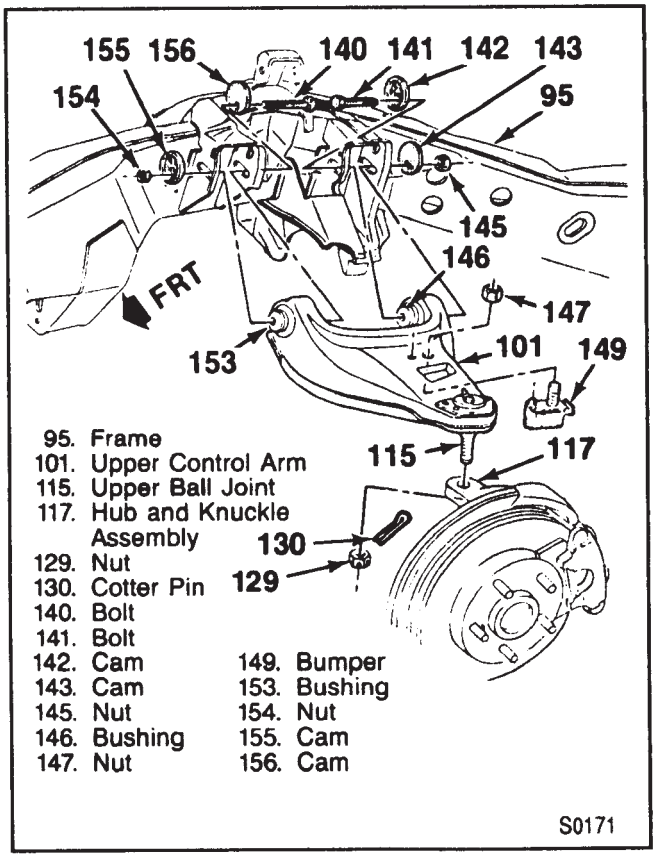

Figure 50—Upper Control Arm Components

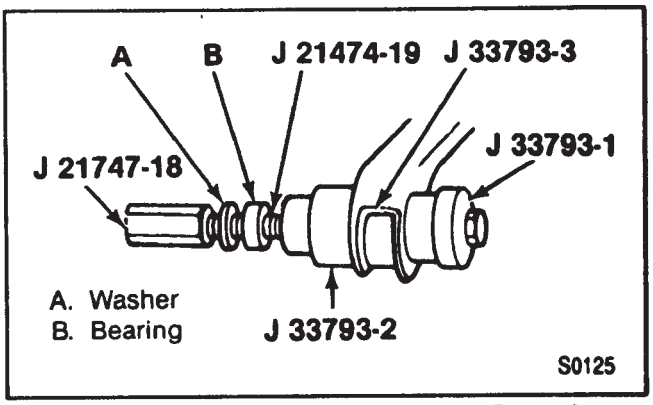

Figure 51—Removing the Upper Control Arm Bushing

6. Bolts (140 and 141).
7. Cams (156 and 142).
8. Upper control arm (101).
9. Nut (147).
10. Bumper (149) from the upper control arm (101).
11. Bushings (146 and 153). Refer to figure 51.

Install or Connect (Figures 50 and 52)

NOTICE: For steps 3, 8, and 10 see "Notice" on page 3C-1.

Tools Required:
J 21474-18 Nut
J 21474-19 Bolt
J 33793 Upper Control Arm Bushing Service Set

1. Bushings (146 and 153) to the upper control arm (101)(figure 52).
2. Bumper (149) to the upper control arm (101).
3. Nut (147) to the bumper (149).

Tighten

- Nut (147) to 27 N.m (20 ft. lbs.).

4. Upper control arm (101) to the frame (95).
5. Cams (156 and 142) to the bolts (140 and 141).
6. Bolts (140 and 141) to the upper control arm (101).

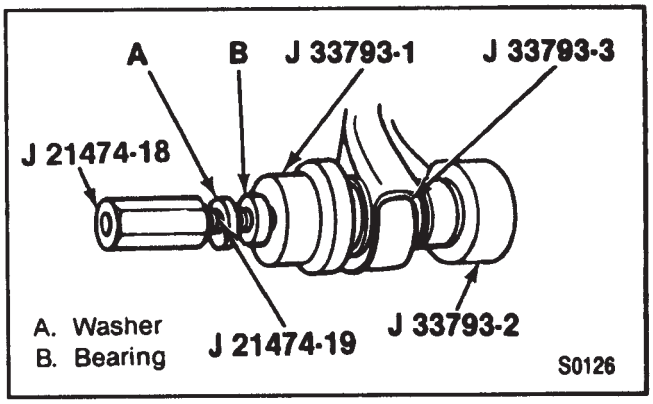

Figure 52—Installing the Upper Control Arm Bushing

- Be sure the bolt (140 and 141) heads are opposed inside the bracket.

7. Cams (155 and 143).
8. Nuts (154 and 145).

Tighten

- Nuts (154 and 145) to 95 N·m (70 ft. lbs.). Refer to FRONT END ALIGNMENT (SECTION 3A).

9. Upper ball joint (115) stud to the knuckle (117).
10. Nut (129) to the upper ball joint (115) stud.

Tighten

- Nut (129) to 83 N·m (61 ft. lbs.).
- Tighten the nut to align the cotter pin. Do not tighten more than 1/6 turn.

11. New cotter pin (130).
    - Bend pin ends against the nut flats.
    - Remove the support from the knuckle.
12. Tire and wheel.
    - Lower the vehicle.

LOWER CONTROL ARM

Remove or Disconnect (Figures 53 through 55)

Tools Required:
- J 21474-3 Screw Assembly
- J 21474-4 Nut
- J 21474-5 Control Arm Spacer
- J 21474-16 Bushing Receiver
- J 33793-4 Bushing Remover and Installer
- J 33793-5 Control Arm Spacer
- J 33793-6 Spacer

- Raise the vehicle and support it with suitable safety stands.

1. Tire and wheel.
   - Unload the torsion bar. Refer to "Torsion Bar(s) and Support Assembly Replacement."
2. Stabilizer shaft. Refer to "Stabilizer Shaft Replacement."
3. Shock absorber. Refer to "Shock Absorber Replacement."
4. Nuts (170 and 165).
5. Bolts (166 and 160).
6. Lower control arm (93).
7. Bushing (167)(figure 54).
8. Bushing (163)(figure 55).

Install or Connect (Figures 53, 56, and 57)

1. Bushing (167)(figure 56).
2. Bushing (163)(figure 57).
3. Lower control arm (93) to the crossmember (171) and the frame bracket (164).
   - Install the front leg of the lower control arm into the crossmember (171) before installing the rear leg into the frame bracket (164).
4. Bolts (166 and 160) in the direction shown in figure 53.

NOTICE: See "Notice" on page 3C-1.

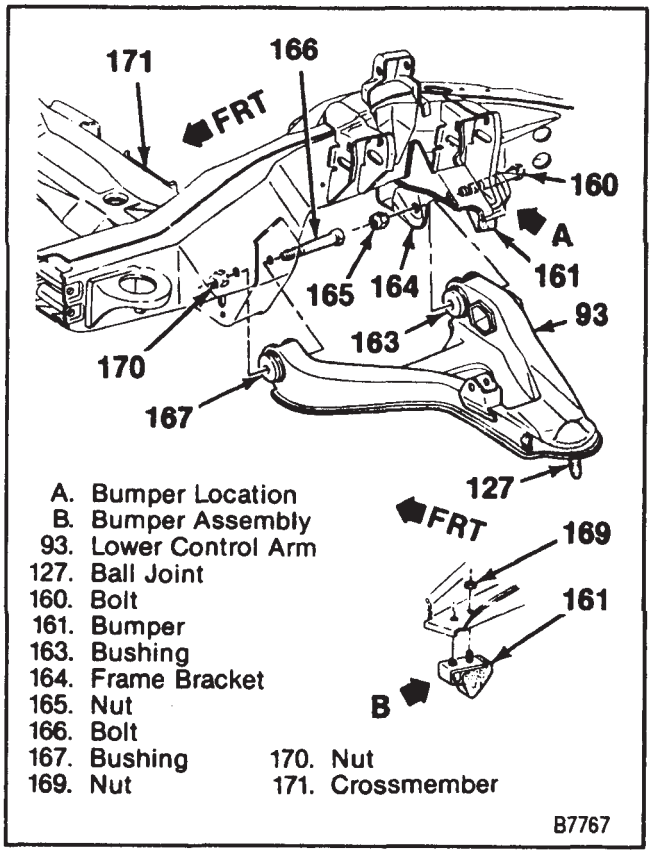

Figure 53—Lower Control Arm Components

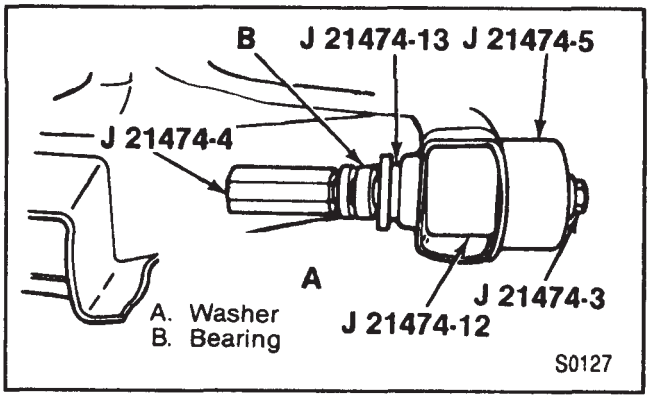

Figure 54—Removing the Lower Control Arm Front Bushing

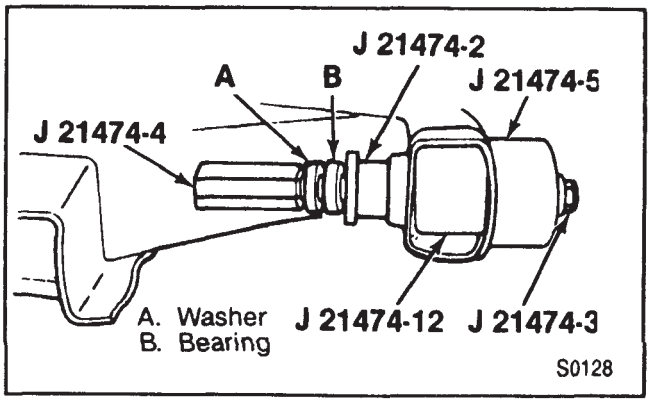

Figure 55—Removing the Lower Control Arm Rear Bushing

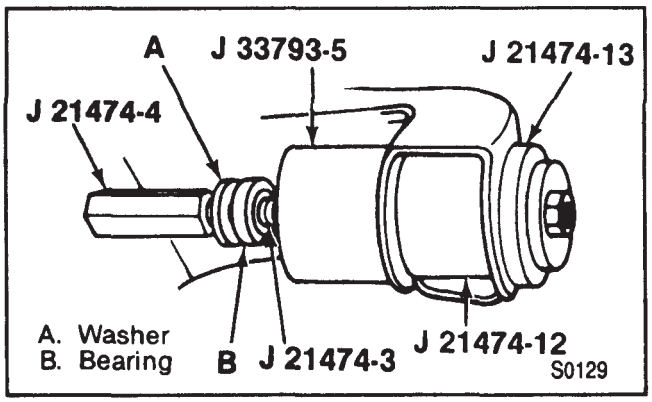

Figure 56—Installing the Lower Control Arm Front Bushing

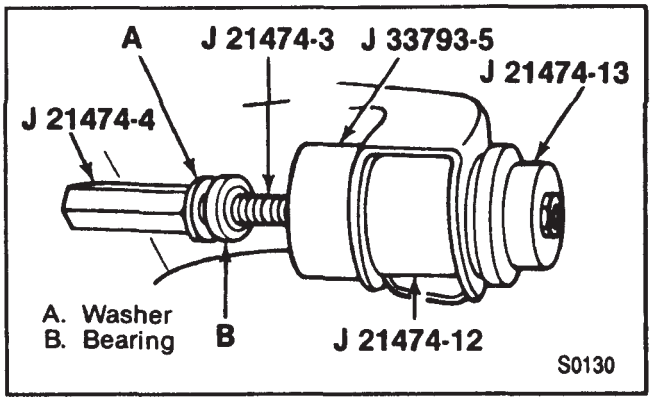

Figure 57—Installing the Lower Control Arm Rear Bushing

5. Nuts (170 and 165).

Tighten

- Bolts (166 and 160) to 200 N·m (148 ft. lbs.) with the lower control arm (162) at "Z" trim height. Refer to FRONT END ALIGNMENT (SECTION 3A).
- Nuts (170 and 165) to 125 N·m (92 ft. lbs.) with the lower control arm (93) at "Z" trim height. Refer to FRONT END ALIGNMENT (SECTION 3A).

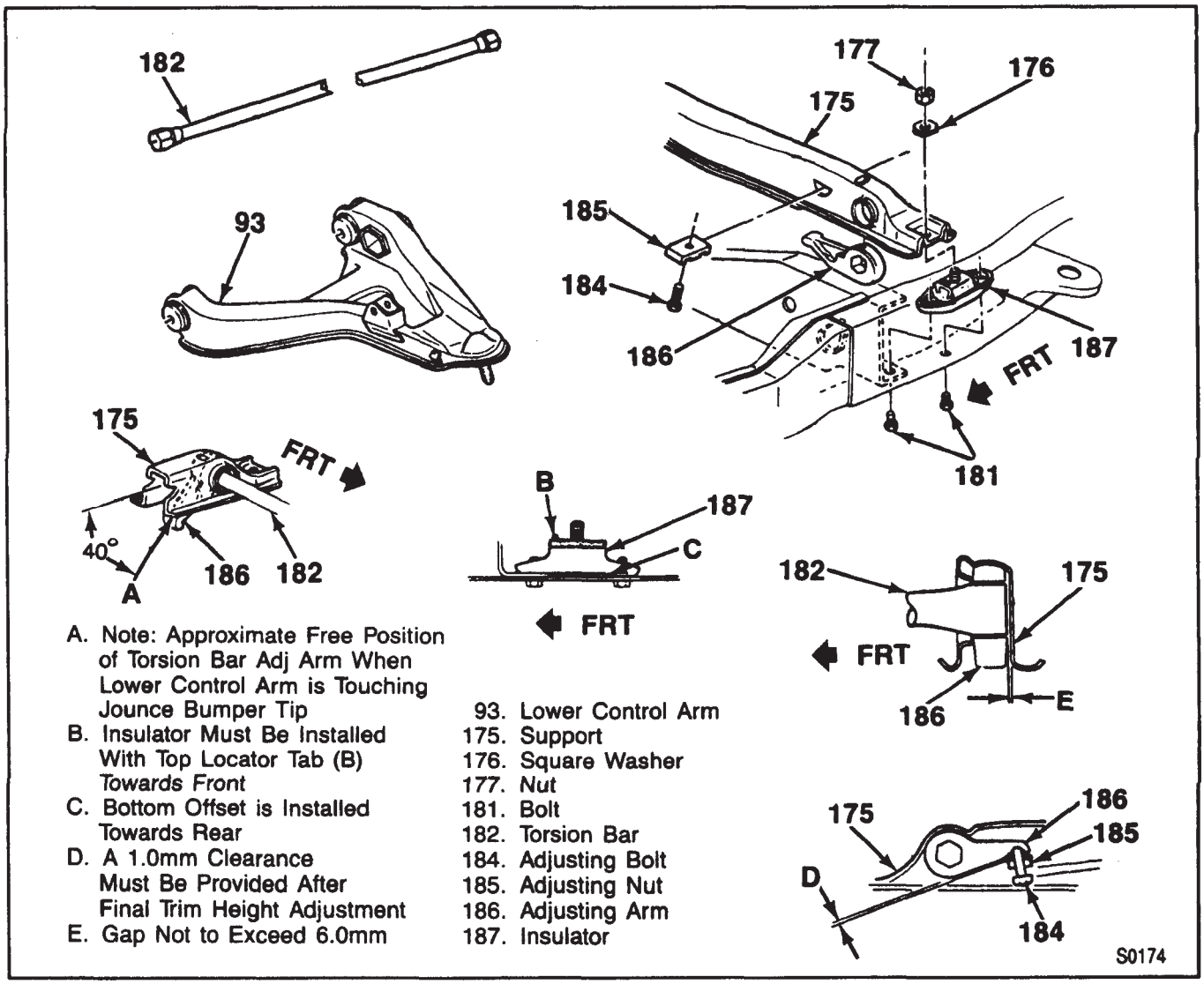

A. Note: Approximate Free Position of Torsion Bar Adj Arm When Lower Control Arm is Touching Jounce Bumper Tip
B. Insulator Must Be Installed With Top Locator Tab (B) Towards Front
C. Bottom Offset is Installed Towards Rear
D. A 1.0mm Clearance Must Be Provided After Final Trim Height Adjustment
E. Gap Not to Exceed 6.0mm

93. Lower Control Arm
175. Support
176. Square Washer
177. Nut
181. Bolt
182. Torsion Bar
184. Adjusting Bolt
185. Adjusting Nut
186. Adjusting Arm
187. Insulator

Figure 58—Torsion Bars and Support

- Tighten the nuts and bolts with the vehicle weight on the wheels.

6. Shock absorber. Refer to "Shock Absorber Replacement."
7. Stabilizer shaft. Refer to "Stabilizer Shaft Replacement."
   - Adjust the torsion bar. Refer to "Torsion Bar(s) and Support Assembly Replacement."
8. Tire and wheel.
   - Lower the vehicle.

TORSION BAR(S) AND SUPPORT ASSEMBLY REPLACEMENT

Remove or Disconnect (Figures 58 and 59)

Tool Required:
J 36202 Torsion Bar Unloader

- Raise the vehicle and support it with suitable safety stands.

1. Adjusting bolt (184) using J 36202 (figure 59).
   - Record the number of tool turns when removing the adjusting screw (184).
   - Move torsion bars forward and leave in place.
2. Adjuster arms (186).
3. Nut (177).
4. Square washer (176).
   - Raise support up and out of the way.
5. Bolts (181).
6. Insulator (187).
   - Slide the insulator (187) off the support (175).
7. Muffler flange at the converter.
   - Loosen the rear exhaust hanger and lower rear exhaust.
8. Support (175) from the frame.
9. Torsion bars (182) from the lower control arms (93)

Install or Connect (Figures 58 and 59)

NOTICE: For steps 6, 7,and 10 see "Notice" on page 3C-1.

Tool Required:
J 36202 Torsion Bar Unloader

1. Torsion bars to the lower control arms and leave in place.
2. Support (175).
3. Rear exhaust system to correct height and tighten. Refer to EXHAUST (SECTION 6F).
4. Muffler flange at converter and tighten. Refer to EXHAUST (SECTION 6F).
5. Insulator (187).
   - Position insulator mount studs through the support. The insulator locator tabs must be indexed to the support (facing forward).
6. Square washer (176) and nut (177) finger tight.
7. Insulator mount bolts (181).

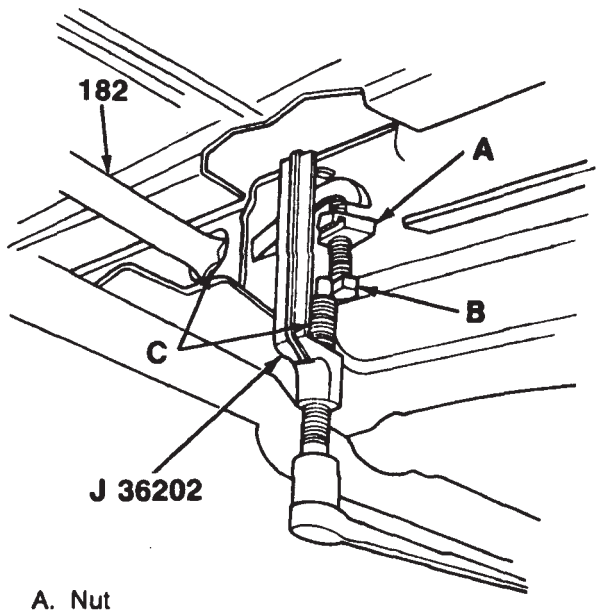

A. Nut
B. Torsion Bar Adjusting Bolt
C. Apply Lubricant at Points to Ease Installation
182. Torsion Bar

S0131

Figure 59—Installing or Removing the Torsion Bar Adjusting Bolt

Tighten

- Bolts (181) to 35 N·m (26 ft. lbs.).
- Nut (177) to 34 N·m (25 ft. lbs.).

8. Adjuster arms (186).
9. Torsion bars to adjuster arms.
   - With torsion bars installed check for clearance. Assembled clearance from the end of the torsion bar to the support should be 6.0 mm (0.236-inch).
10. Nut (185) and bolt (184).
    - Be certain that the notches on the special nut (185) seat on the support (175).
    - Lubricate the top of the adjusting arm (186).
    - Lubricate the adjusting bolt (184).

Tighten

- Using tool J 36202, tighten the tool against the adjusting arm (186) the recorded number of turns thereby loading the torsion bars.
- Lower the vehicle.
- Refer to FRONT END ALIGNMENT (SECTION 3A) for final "Z" trim height.

SPECIFICATIONS

	N·m	Ft. Lbs.
Stabilizer Shaft Clamp to Lower Control Arm Bolts	33	24
Stabilizer Shaft Clamp to Frame Bolts	48	35
SHOCK ABSORBER		
Shock Absorber Upper Nut	73	54
Shock Absorber Lower Nut	73	54
CONTROL ARMS		
Upper Control Arm to Frame Attaching Nuts	95	70
Lower Control Arm to Frame Attaching Nuts	125	92
Lower Control Arm to Frame Attaching Bolts	200	148
BALL JOINTS		
Service Ball Joints to Control Arm	20	15
Lower	113	83
Upper	83	61
FRONT WHEEL DRIVE		
Drive Axle Nut to Hub and Bearing	245	181
Torsion Bar Support Retainer Bolts and Nuts	35	26
Tie Rod End to Steering Knuckle Nut	48	35
Hub and Bearing Assembly, Shield and Knuckle	116	86
Retainer to Torsion Bar Support Bolts	35	26
Torsion Bar Retainer Bolt	34	25

T2601

SPECIAL TOOLS

1. J 24319-01

2. 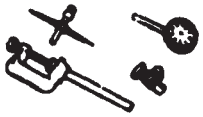 J 8001

3. J 8092

4. J 9519-D

5. J 21474-01

6. J 21474-18

7. J 21474-19

8. J 21474-20

9. J 21474-23

10. J 22222-5

11. J 22269-01

12. 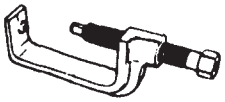 J 36202

13. J 23028-01

14 J 23742

15. J 28574

16. J 28712

17. 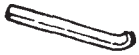 J 29117-A

18. J 29193

19. J 33793

20. J 34026

21. 1. J 6627-A

1. Tie Rod End Puller
2. Dial Indicator
3. Driver Handle
4. Ball Joint Remover and Installer Set
5. Control Arm Bushing Service Set
6. Nut
7. Bolt
8. Front and Rear Bushing Installer
9. Bushing Remover
10. Control Arm Bushing Remover
11. Tie Rod End Installer
12. Torsion Bar Unloading/Loading Tool
13. Coil Spring Remover and Installer
14. Ball Joint Separator
15. Steering Knuckle Seal Installer
16. Axle Shaft Boot Seat Protector
17. Wheel Bearing Cup Remover
18. Steering Linkage Installer
19. Control Arm Bushing Service Set
20. Ball Joint Separator
21. Wheel Stud Remover

V2030

SECTION 3D

REAR SUSPENSION

NOTICE: When fasteners are removed, always reinstall them at the same location from which they were removed. If a fastener needs to be replaced, use the correct part number fastener for that application. If the correct part number fastener is not available, a fastener of equal size and strength (or stronger) may be used. Fasteners that are not reused, and those requiring thread locking compound will be called out. The correct torque value must be used when installing fasteners that require it. If the above conditions are not followed, parts or system damage could result.

CONTENTS

SUBJECT	PAGE
General Description	3D-1
Diagnosis of Rear Suspension Components	3D-1
On-Vehicle Service	3D-2
Shock Absorber Replacement	3D-2
Spring Assembly Replacement	3D-2
Spring Bushing Replacement	3D-4
Shackle Replacement	3D-4
Rear Shackle Bushing Replacement	3D-4
Specifications	3D-6

GENERAL DESCRIPTION

The S/T series vehicles use a leaf spring and solid rear axle suspension system.

The rear axle assembly is attached to multi-leaf springs by U-bolts. The front ends of the springs are attached to the frame at the front hangers, through rubber bushings. The rear ends of the springs are attached to the frame with shackles, which allow the springs to change their position while the vehicle is in motion.

Ride control is provided by two identical direct double acting shock absorbers, angle-mounted between the frame and brackets attached to the anchor plate.

DIAGNOSIS OF REAR SUSPENSION COMPONENTS

PROBLEM	POSSIBLE CAUSE	CORRECTION
Spring Noise	1. Loose U-bolts. 2. Loose or worn eye bushings. 3. Lack of lubrication. 4. Faulty shock absorber.	1. Tighten to specified torque. 2. Replace the eye bushings. 3. Lubricate as required. 4. Replace the shock absorber.
Spring Sag or Bottom	1. Inoperative shock absorbers. 2. Broken spring leaf. 3. Severe operation or overloading.	1. Replace the shock absorbers. 2. Replace the spring assembly. 3. Check the load capacity rating.
Spring Breakage	1. Loose U-bolts. 2. Normal fatigue. 3. Overloading.	1. Tighten to specified torque. 2. Replace the spring. 3. Check the load capacity rating.
Shock binding	1. Scored rod. 2. Dents. 3. Leaks (seal cover).	1. Replace 2. Replace 3. Replace
Shock Noisy	1. Broken mounts. 2. Extreme bushing wear.	1. Replace. 2. Replace.

D0162

ON-VEHICLE SERVICE

SHOCK ABSORBER REPLACEMENT

Remove or Disconnect (Figure 1)

NOTICE: For steps 2 and 3, see "NOTICE" on page 3D-1.

- Raise the vehicle on a hoist.

1. Shock absorber (3) to frame bracket nuts (2) and bolts (1).
2. Shock absorber (3) to anchor plate nut (5) and washer (4).
3. Shock absorber (3) from the vehicle.

Install or Connect (Figure 1)

1. Shock absorber (3) to the lower anchor plate.
   - Do not attach the washer (4) or nut (5).
2. Shock absorber (3) to the frame bracket with the bolts (1) and nuts (2).

Tighten

- Nuts to 23 N·m (17 ft. lbs.).

3. Lower anchor plate washer (4) and nut (5).

Tighten

- Nut to 64 N·m (47 ft. lbs.).
- Lower the vehicle.

SPRING ASSEMBLY REPLACEMENT

Remove or Disconnect (Figures 1 through 3)

- Raise the vehicle on a hoist.
- Support the rear axle to relieve the tension on the leaf springs.

1. Shock absorber (3).

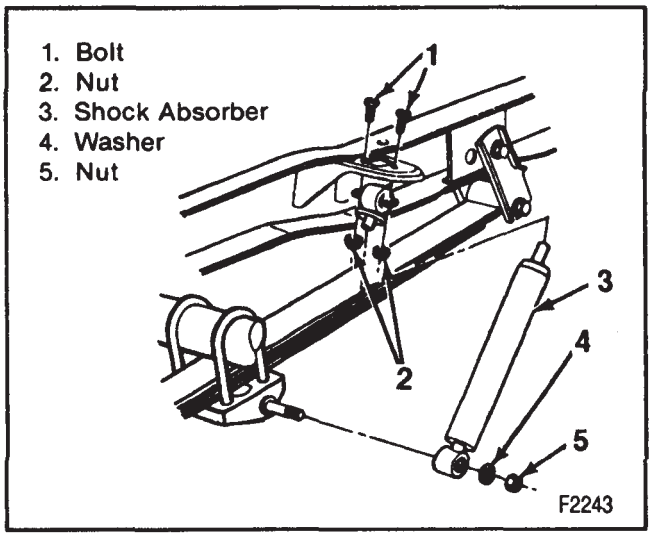

Figure 1—Shock Absorber Mounting

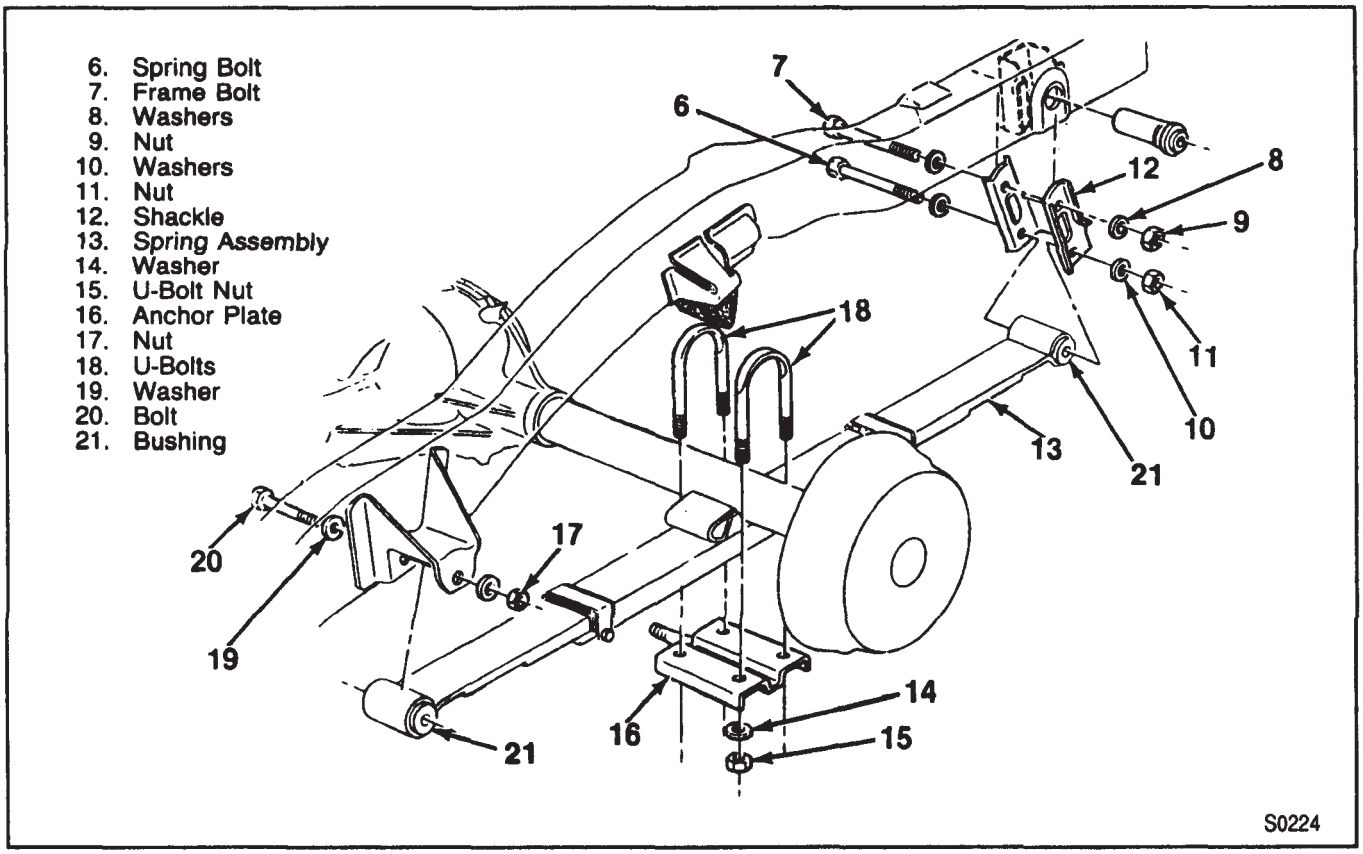

Figure 2—Spring Assembly—Utility

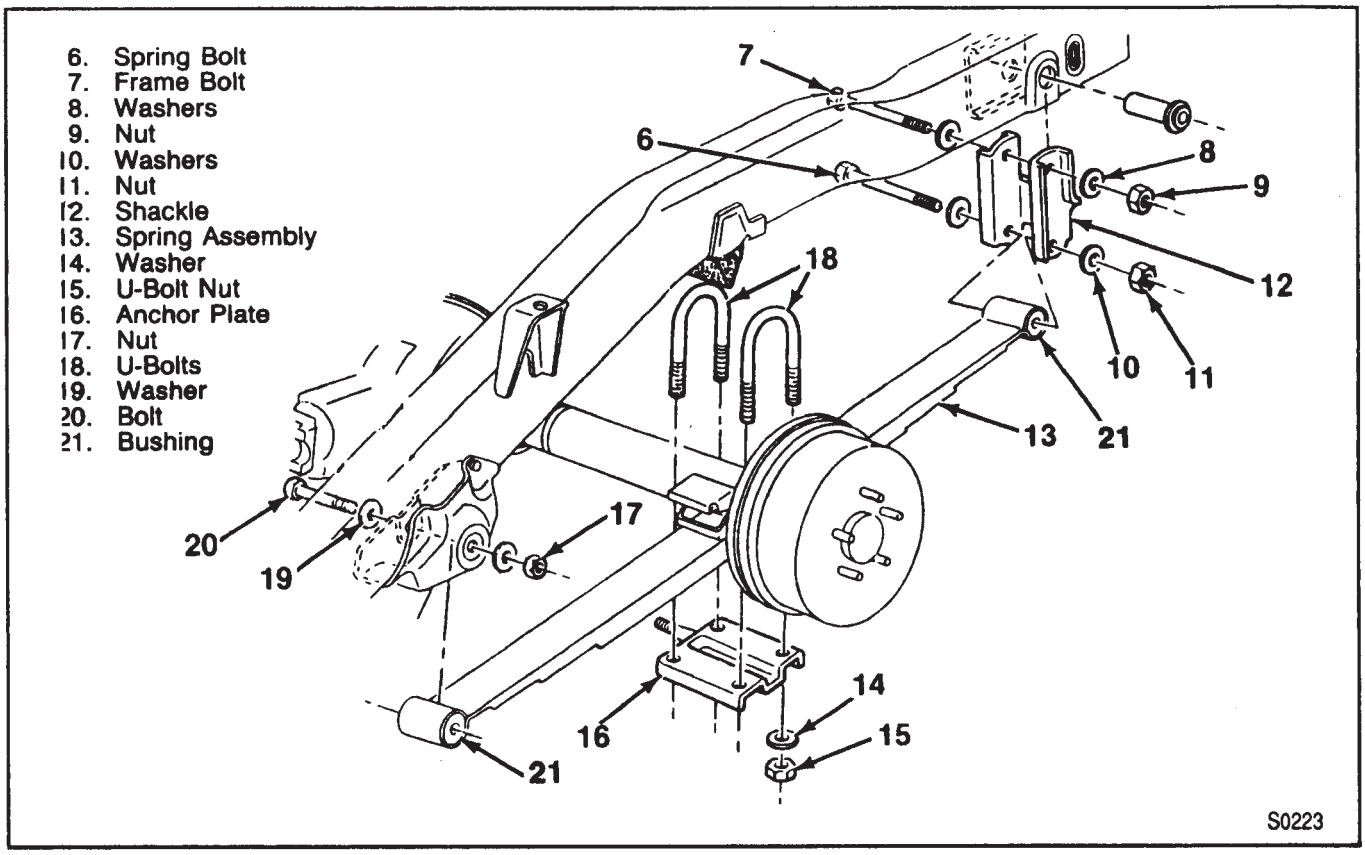

Figure 3—Spring assembly—Except Utility

2. U-bolt nuts (15), washers (14), the anchor plate (16), and the U-bolts (18).
   - Discard the U-bolts and nuts.
3. Shackle (12) to the frame bolt (7), washers (8), and nut (9).
4. Spring assembly (13) to front bracket nut (17), washers (19) and bolt (20).
5. Spring assembly (13) from the vehicle.
6. Shackle (12) to spring nut (11), washers (10), and spring bolt (6).
7. Shackle (12).

Install or Connect (Figures 1 through 3)

1. Shackle (12) to the rearward spring eye.
2. Shackle to spring bolt (6), washers (10), and nut (11).
   - Do not tighten.
3. Spring assembly to the vehicle.
4. Spring to front bracket bolt (20), washers (19), and nut (17).
   - Do not tighten.
5. Shackle (12) to the frame bolt (7), washers (8), and nut (9).
   - Do not tighten.

- Remove the spring support.

NOTICE: See "Notice" on page 3D-1 of this section.

6. U-bolts (18), anchor plate (16), washers (14), and U-bolt nuts (15).

Tighten (Figure 4)

- U-bolt nuts (15) to 25 N·m (18 ft. lbs.) in sequence initially (figure 4).
- Then U-bolt nuts (15) to 115 N·m (85 ft. lbs.) in sequence.

- Support the axle in such a way that there is a distance of 170 mm±6 mm (6.7 inch±0.24 inch) between the axle tube and the bumper bracket metal surface.

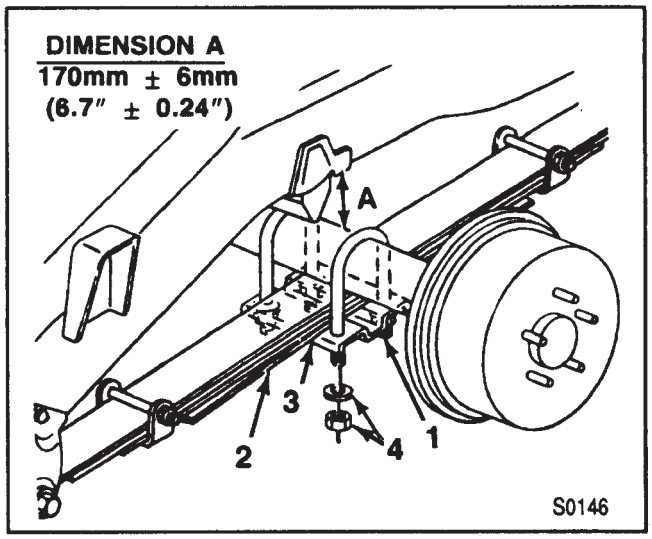

Figure 4—U-Bolt Torque Sequence

Tighten

- The front bracket nut (17) and the rear shackle nuts (11 and 9) to 125 N·m (92 ft. lbs.).

7. Shock absorber (3).

SPRING BUSHING REPLACEMENT

Remove or Disconnect (Figure 2 or 3)

1. Spring assembly (13) from the vehicle.
2. Bushing (21) from the spring assembly (13).
   - Press the bushing from the spring in an arbor press.

Clean

1. The spring eye of any remaining parts of the bushing (21).
2. Remove any burrs that would cause the new bushing (21) to bind when installed.

Install or Connect (Figure 2 or 3)

1. A rubber lubricant to the bushing (21), and the spring eye.
2. Bushing (21) to the spring assembly (13).
   - Press the bushing into the spring using an arbor press.
3. Spring assembly (13) to the vehicle.

SHACKLE REPLACEMENT

Remove or Disconnect (Figure 2)

- Raise the vehicle on a hoist and support the rear axle.

1. Frame to shackle nut (9), washers (8), and frame bolt (7).
2. Shackle (12) to spring nut (11), washers (10), and bolt (6).
3. Shackle (12) from the vehicle.

Install or Connect (Figure 2)

1. Shackle (12) to the vehicle.
2. Shackle (12) to spring bolt (6), washers (10), and nut (11).
   - Do not tighten.

NOTICE: See "Notice on page 3D-1 of this section.

3. Frame to shackle bolt (7), washers (8), and nut (9).
   - Do not tighten.

- Support the axle in such a way that there is a distance of 170 mm ±6 mm (6.7-inch ±0.24-inch) between the axle tube and the bumper bracket metal surface.

Tighten

- The rear shackle nuts (9 and 11) to 125 N·m (92 ft. lbs.).

REAR SHACKLE BUSHING REPLACEMENT

Tools Required
J 9519-E Ball Joint Remover J 21058-14 Adapter (Part of J 21058)

Remove or Disconnect

- Raise the vehicle on a hoist and support with suitable stands.

1. Negative battery cable.
2. Fuel tank. Refer to the 1992 FUEL AND EMISSION MANUAL if you are using X-9229 and to the Fuel and Emmissions section at the rear of this manual if you are using ST 369-92.
   - Support the rear axle.
3. Upper shackle bolt, nut and flat washers.
   - Loosen the lower shackle bolt at the spring and leave attached.
   - Lower the axle until there is enough clearance to remove the shackle bushing.
   - Using a blunt punch, straighten out the bushing flange that comes through the frame inner.
4. Shackle bushing using tools J 21058-14 and J 9519-E (figure 5).

Important

- It is recommended that both shackle bushings be replaced while the fuel tank is removed.

Install or Connect

NOTICE: For steps 2 and 3, see "NOTICE" on page 3D-1.

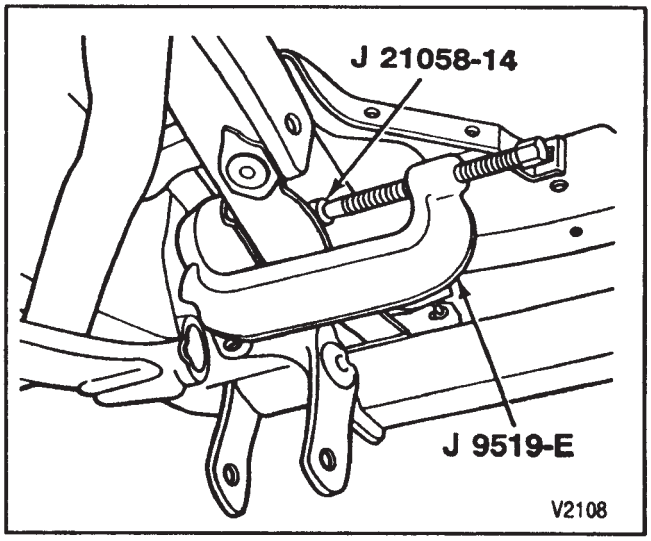

Figure 5—Removing Shackle Bushing

Tools Required:
J 21474-5 Receiver
J 21474-13 Control Arm Bushing Installer
J 21474-18 3/8-inch Nut
J 21474-19 3/8-inch Bolt

1. Shackle bushing using tools J 21474-18, J 21474-13, J 21474-19, J 21474-5 (figure 6).
   - Assemble tools as shown in figure 6 and pull the bushing into the frame rail until the flanged portion of the bushing is flush with the rail.
   - Stake the shackle bushing inner flange.
   - Raise the axle into position.
2. Frame to shackle bolt (7), washers (8), and nut (9) (figure 2).
   - Do not tighten.
3. Repeat steps 1 and 2 for the other bushings.

- Support the axle in such a way that there is a distance of 170 mm ±6 mm (6.7-inch ±0.24-inch) between the axle tube and the bumper bracket metal surface.

Tighten

- The rear shackle nuts (9 and 11) to 125 N·m (92 ft. lbs.).

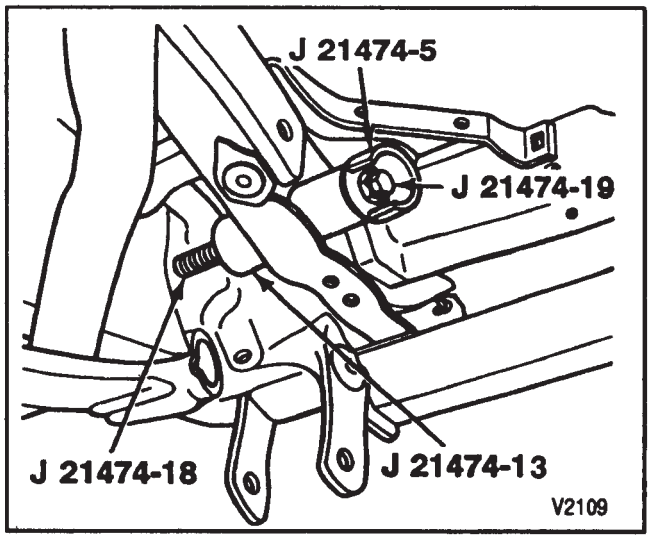

Figure 6—Installing Shackle Bushing

4. Fuel tank. Refer to the 1992 LIGHT DUTY FUEL AND EMISSIONS MANUAL if you are using X-9229 and to the Fuel and Emmissions section at the rear of this manual if you are using ST 369-92.
   - Lower vehicle.
5. Negative battery cable.

SPECIFICATIONS

Nut	N·m	Ft. Lbs.
U-Bolt	115	85
Shackle to Frame Bolt	125	92
Shackle to Spring Bolt	125	92
Shackle to Front Bracket Bolt	125	92
Shock Absorber Upper	23	17

T2598

SECTION 3E

TIRES AND WHEELS

NOTICE: When fasteners are removed, always reinstall them at the same location from which they were removed. If a fastener needs to be replaced, use the correct part number fastener for that application. If the correct part number fastener is not available, a fastener of equal size and strength (or stronger) may be used. Fasteners that are not reused, and those requiring thread locking compound will be called out. The correct torque value must be used when installing fasteners that require it. If the above conditions are not followed, parts or system damage could result.

CONTENTS

SUBJECT	PAGE
General Description	3E- 1
Replacement Tires	3E- 1
Tire Chain Usage	3E- 3
Tire Placard	3E- 3
Wheels	3E- 3
Diagnosis of Tires and Wheels	3E- 4
On-Vehicle Service	3E- 6
Wheel Repair	3E- 6
Metric Wheel Nuts And Bolts	3E- 6
Tire Load Limits And Inflation Pressure	3E- 6
Wheel Removal	3E- 7
Tire and Wheel Installation	3E- 8
Tire Rotation	3E- 8
Tire Dismounting	3E- 8
Tire Repair	3E- 8
Tire Mounting	3E- 8
Checking Wheel And Tire Runout	3E- 9
Measuring Wheel And Tire Runout	3E- 9
Vectoring	3E-10
Balancing the Tire And Wheel	3E-11
Spare Tire Carrier Replacement	3E-13
Aluminum Wheels	3E-13
Specifications	3E-15

GENERAL DESCRIPTION

The factory installed tires are designed to operate satisfactorily with loads up to and including the full rated load capacity when inflated to the recommended inflation pressures.

Correct tire pressures, wheel alignment, and driving techniques have an important influence on tire life. Heavy cornering, excessive rapid acceleration, and heavy braking will increase tire wear.

REPLACEMENT TIRES

A Tire Performance Criteria (TPC) specification number is molded in the sidewall near the tire size of all original equipment tires. This specification number assures that the tire meets GM's performance standards for traction, endurance, dimension, noise, handling, rolling resistance, and others. Usually a specific TPC number is assigned to each tire size (figure 1).

CAUTION: Do not mix different types of tires on the same vehicle such as radial, bias, and bias-belted tires except in emergencies because vehicle handling may be seriously affected and may result in loss of control

Replacement tires should be the same size, load range and construction as the original tires. Replace the original tires with tires that have the same TPC specification number. Use of any other tire size or type may seriously affect ride, handling, speedometer/odometer calibration, vehicle ground clearance, and tire clearance to the body and chassis. This does not apply to the spare supplied with the vehicle.

It is recommended that new tires be installed in pairs on the same axle. If it is necessary to replace only one tire, it should be paired with the tire having the most tread, to equalize brake traction.

Although they may appear different in tread design, tires built by different manufacturers with identical TPC specifications numbers, can be intermixed on the same vehicle.

P-METRIC SIZE TIRES

Most P-metric tires do not have exact corresponding alpha-numeric tire sizes. For example, (figure 2) a P205/75R15 is not equal in size and load carrying capacity to an FR78-15. For this reason, replacement tires should be of the same TPC specification number (same size, load range, construction) as those originally on the vehicle. If P-metric tires must be replaced with other sizes, a tire dealer should be consulted. Tire companies can best recommend the closest match between alpha-numeric and P-metric sizes within their own tire lines.

ALL-SEASONS TIRES

Most GM vehicles are now equipped with steel-belted all-season radial tires as standard equipment. Designed for soft quiet ride, good handling, and long tread life, these tires provide all-seasons traction performance and low rolling resistance to help improve fuel economy. These tires have a 37 percent higher average rating for snow traction than the non all season radial tires previously used and therefore qualify as snow tires . These tires are identified by an "M+S" molded in the tire sidewall following the size. The suffix "MS" is also molded in the sidewall after the TPC specification number (figure 1).

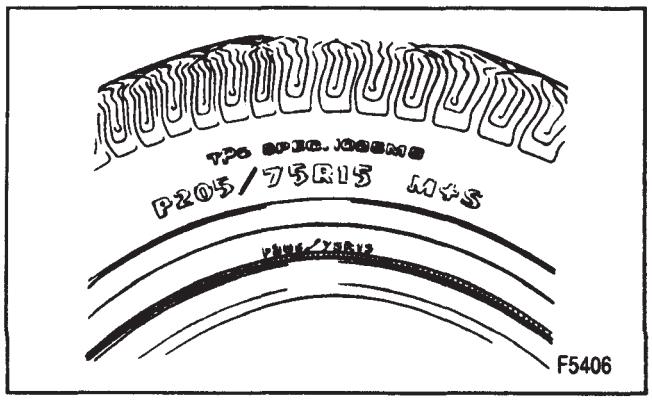

Figure 1—Tire Identification

TOURING TIRES

These all-seasons tires maintain the ride comfort and low noise performance of standard all-seasons tires while offering handling capabilities closer to performance tires. These tires offer a performance appearance on many vehicles that weren't designed for all out performance, but want the look.

PERFORMANCE TIRES

These are also all-seasons tires but they place much more emphasis on handling and tend to make sacrifices in ride comfort and tire noise. These tires have a higher speed rating than standard all-seasons or touring tires and are used on vehicles where excellent handling and responsiveness are essential.

COMPACT SPARE TIRE

The compact spare uses a narrow 4-inch wide rim. The wheel diameter is at least one inch larger than the road wheels.

The compact spare wheel should not be used with standard tires, snow tires, wheel covers, or trim rings. If such use is attempted, damage to these items or other parts of the vehicle may occur.

Inflation pressure of the compact spare must be periodically checked and maintained at 415 kPa (60 psi). It can be mounted and dismounted from its wheel using present tire changing equipment and procedures. As with other tires, the beads should completely seat at 275 kPa (40 psi). The tire may then be safely inflated to 415 kPa (60 psi).

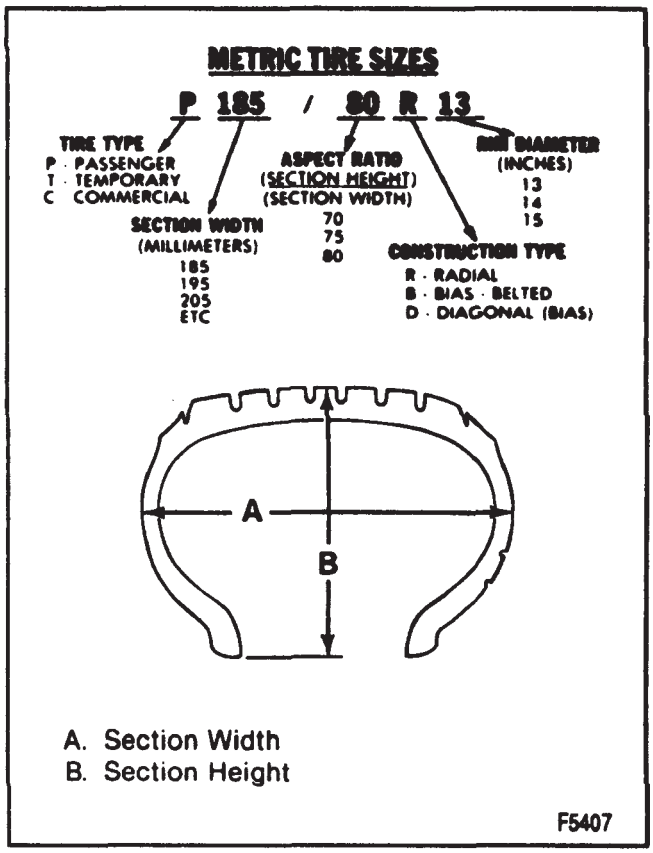

Figure 2—P-Metric Code Breakout

CAUTION: To avoid serious personal injury, do not stand over tire when inflating. The bead may break when the bead snaps over safety hump. Do not exceed 275 kPa (40 psi) pressure when inflating any tire if beads are not seated. If 275 kPa (40 psi) pressure will not seat beads, deflate, relubricate the beads and reinflate. Overinflation may cause the bead to break and cause serious personal injury.

See the tire placard or MAINTENANCE AND LUBRICATION (SECTION 0B) for tire inflation specifications.

TIRE CHAIN USAGE

When chains are necessary, use SAE Class "S" tire chains (figure 3). These may also be designated as 1100 Series, Type PL tire chains. These chains are specially designed to limit the "fly off" effect that occurs when the wheel rotates.

Manufacturers of tire chains have a specific chain size for each tire size to ensure proper fit when installed. Therefore, be sure to purchase the correct chains for the tires on which they are to be used. Rubber adjusters should not be used to take up slack or clearance in chains which are loose due to incorrect size. Always follow the chain manufacturer's installation instruction.

Use of chains may adversely affect handling. When using chains:

- Adjust speed to road conditions.
- Avoid sharp turns.
- Avoid locked-wheel braking in general, to help prevent chain damage to your vehicle.
- Install the chains on the drive tires as tightly as possible, then tighten them again after driving 1/4 to 1/2 mile (0.4 to 0.8 kilometer). The use of chains on the non-drive tires is not recommended; the chains may contact and possibly damage the vehicle. If you intend to use chains on the non-drive tires, be sure there is enough clearance.
- Do not exceed 45 mph (70 km/h), or the chain manufacturer's speed limit, if lower.
- Drive in a restrained manner and avoid large bumps, potholes, severe turns, and other maneuvers which could cause the tires to bounce up and down.
- Follow any other instructions of the chain manufacturer which do not disagree with the above.
- Refer to the owner's manual for tire sizes with which chain usage is not recommended.

TIRE PLACARD

The tire information label is permanently located on the rear face of the driver's door, and should be referred to for tire information (figure 4). The label lists the maximum vehicle load, tire size (including spare) and cold inflation pressure (including spare). For further information, refer to GENERAL INFORMATION (SECTION 0A).

WHEELS

Wheels must be replaced if they are bent, dented, have excessive lateral or radial runout, leak air through the welds, have elongated bolt holes, or wheel nuts will not stay tight. Wheels with runout greater than specified may cause objectional vibrations.

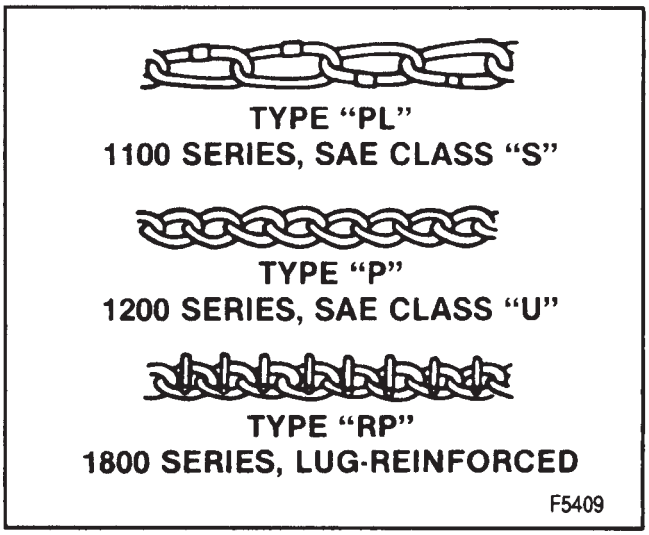

Figure 3—Tire Chain Types

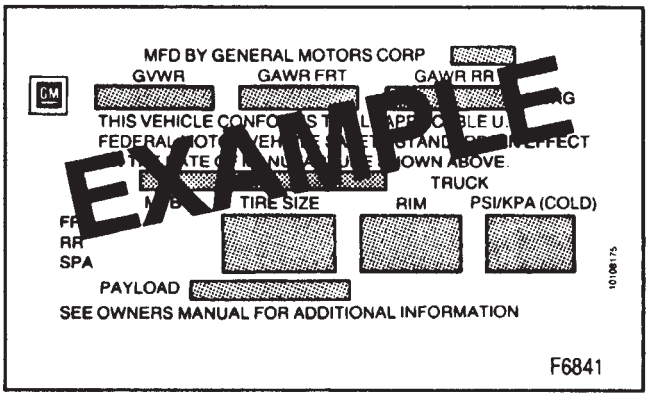

Figure 4—Tire Certification Label

Replacement wheels must be equivalent to the original equipment wheels in load capacity, diameter, rim width, offset, and mounting configuration. A wheel of incorrect size or type may affect wheel and hub bearing life, brake cooling, speedometer/odometer calibration, vehicle ground clearance, and tire clearance to the body and chassis.

The use of aftermarket reverse-type wheels, designed to extend the wheel away from the body, will increase the scrub radius. An increased scrub radius may greatly increase steering effort and reduce hub bearing life.

Important

- The use of wheels and/or tires with higher load capacity ratings than originally equipped on the vehicle will not increase the Gross Axle Weight Rating (GAWR) or Gross Vehicle Weight Rating (GVWR) of the vehicle.

  Steel wheels can be identified by a two or three letter code stamped into the rim near the valve stem. Aluminum wheels have the code, part number, and manufacturer ID cast into their back side.

DIAGNOSIS OF WHEELS AND TIRES

The following information (including figures 5 and 6) will help to identify certain tire-related durability and drivability problems.

PROBLEM	POSSIBLE CAUSE	CORRECTION
Excessive Heel And Toe Wear	High speed driving, excessive use of brakes.	Correct as required, rotate tires regularly.
Excessive Tire Edge(s) Wear	1. Underinflated tires. 2. Vehicle overloaded. 3. High speed cornering. 4. Incorrect toe setting.	1. Inflate to recommended pressure. 2. Correct as required -- refer to certification label. 3. Correct as required. 4. Set to correct specifications.
Excessive Tire Wear (Center Of Tread)	Overinflated tires.	Deflate to recommended pressure.
Uneven Tire Wear	1. Improper tire pressure. 2. Incorrect tire and wheel usage. 3. Defective shock absorbers. 4. Front end out of alignment. 5. Loose, worn, or damaged steering linkage, joints, suspension components, bushings and/or ball joints. 6. Out of balance wheel/tire.	1. Inflate to recommended pressure. 2. Install correct tire-wheel combination. 3. Replace shock absorbers. 4. Align the front end. 5. Inspect, repair or replace as required. 6. Balance wheel/tire.
Radial Tire Waddle (Side To Side Movement At Speeds Between 5 And 15 MPH)	Defective tires.	Replace defective tires.
Vibration	1. Out of balance wheel/tire. 2. Tire runout. 3. Wheel runout. 4. Defective tire.	1. Balance wheel/tire. 2. Replace tire. 3. Replace wheel. 4. Replace tire.
		D0123

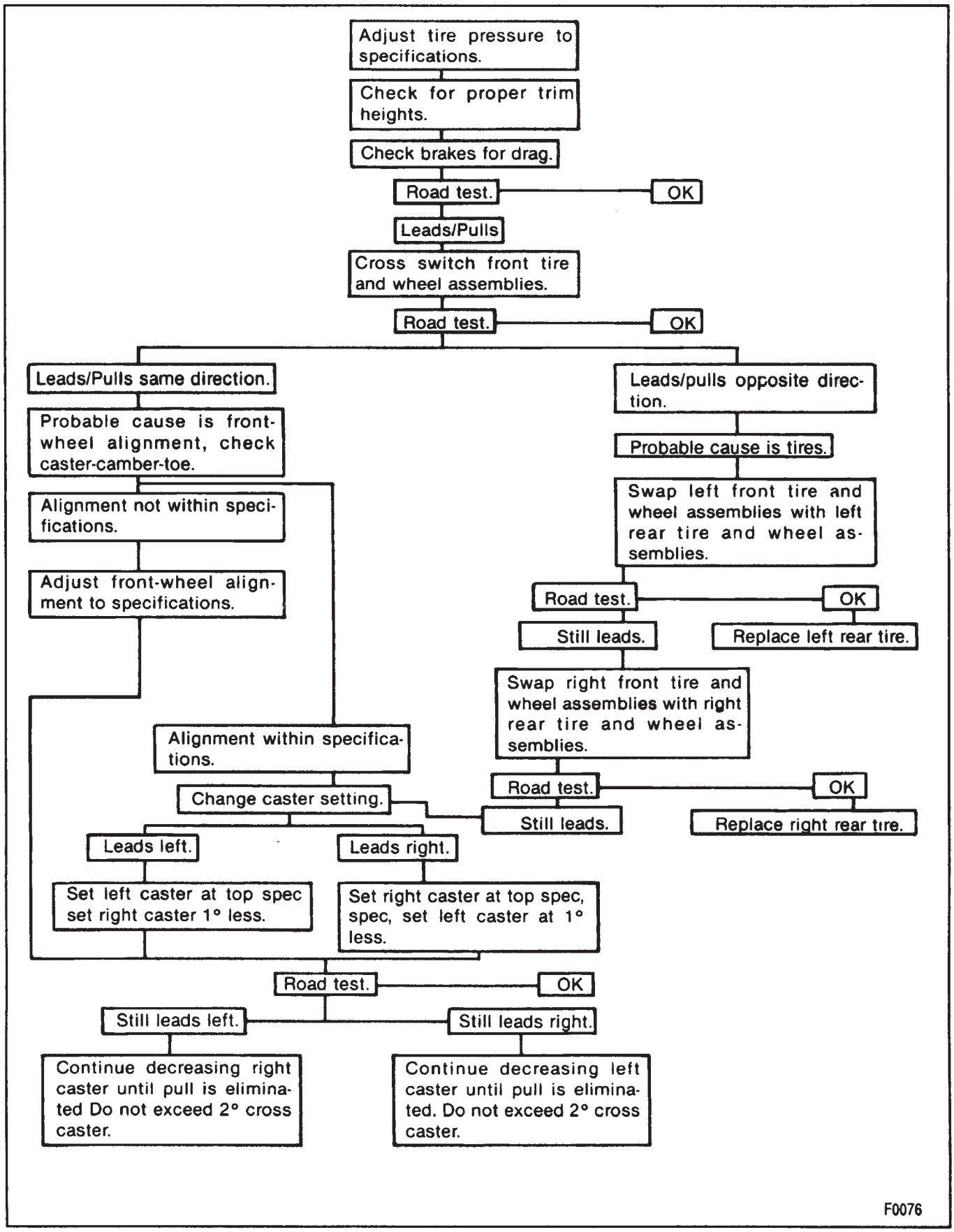

Figure 5—Radial Tire Lead/Pull Diagnosis Chart

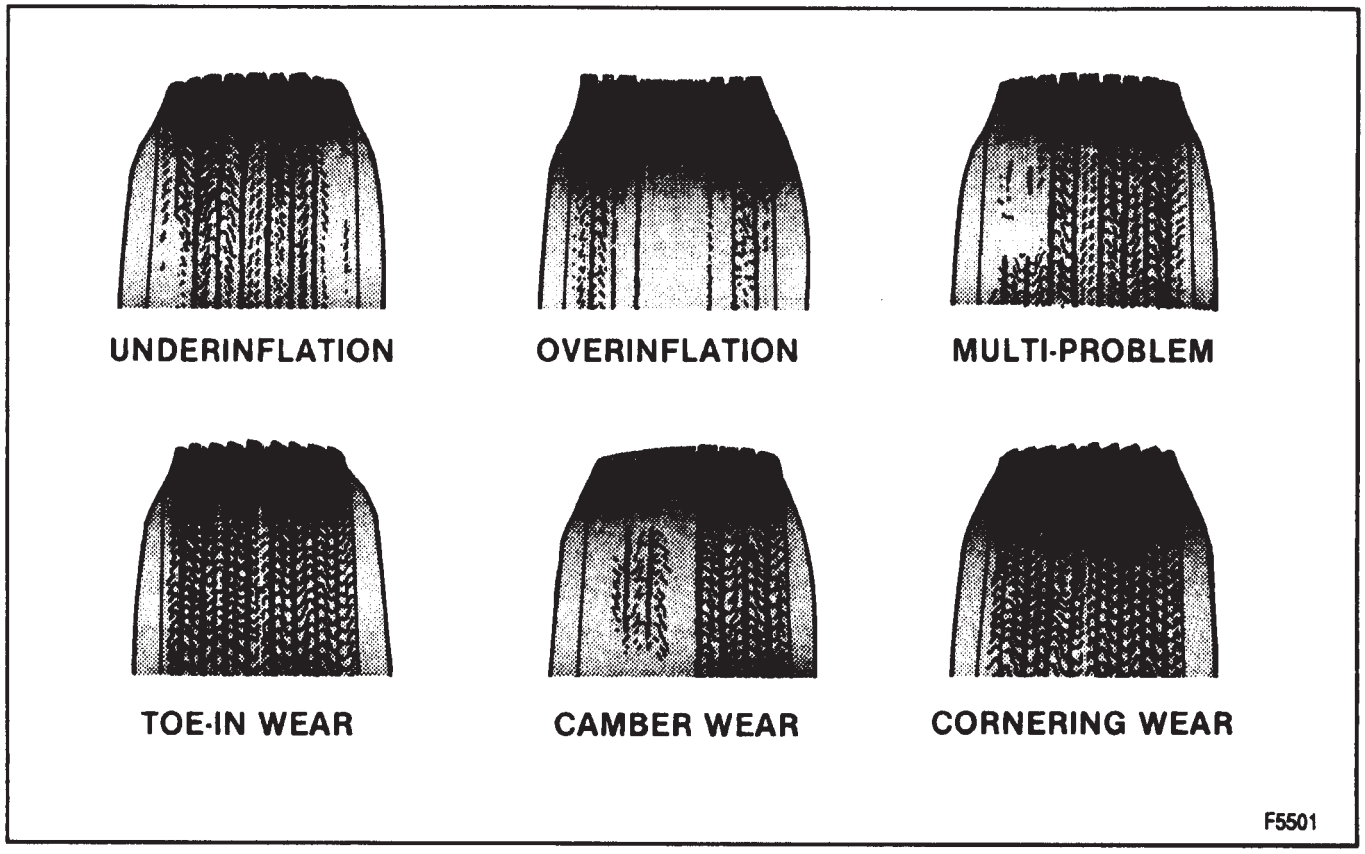

Figure 6—Tire Wear Patterns

ON-VEHICLE SERVICE

WHEEL REPAIR

Wheel repairs that use heating, welding, or peening are not approved. An inner tube is not an acceptable repair for leaky wheels or tires. Porosity in aluminum wheels can not be repaired. If a wheel is found to be leaking, the wheel should be replaced with one of original equipment quality.

METRIC WHEEL NUTS AND STUDS

Metric wheel nuts and bolts are identified as follows: The wheel nut has the word "Metric" stamped on the face. The letter "M" is stamped into the end of the wheel stud. The thread size of metric wheel nuts and bolts are indicated by the following example:

M12 x 1.5

M means metric

12 is the diameter in millimeters

1.5 is millimeters per thread (gap between thread)

TIRE LOAD LIMITS AND INFLATION PRESSURE

The factory installed wheels and tires are designed to handle loads up to and including their rated load capacity when inflated to the recommended inflation pressures.

Correct tire pressures, wheel alignment, and driving techniques have an important influence on tire life. Under-inflated tires can cause handling problems, poor fuel economy, shortened tire life, and tire overloading. Heavy cornering, excessive rapid acceleration, and heavy braking will increase tire wear.

INFLATION OF TIRES

The metric unit for tire inflation pressure is the kilopascal (kPa). Tire pressure may be printed in both (kPa) and psi. One psi equals 6.9 (kPa) (Refer to Inflation Pressure Conversion Table).

INFLATION PRESSURE CONVERSION CHART (KILOPASCALS TO PSI)

kPa	psi	kPa	psi
140	20	215	31
145	21	220	32
155	22	230	33
160	23	235	34
165	24	240	35
170	25	250	36
180	26	275	40
185	27	310	45
190	28	345	50
200	29	380	55
205	30	415	60

Conversion: 6.9 kPa=1 psi

T2567

The pressure recommended for any model is carefully calculated to give a satisfactory ride, handling, tread life, and load carrying capacity.

Tire pressure, with tires cold, (after vehicle has set for three hours or more, or driven less than one mile [1.6 km]), should be checked monthly or before any extended trip and set to the specifications on the certification label located on rear face of driver's door. Tire inflation pressure is also given in SECTION 0B.

Valve caps or extensions should be on the valves to keep dust and water out.

1. **For sustained driving at speeds up to 85 mph (140 km/h),** in countries where such speeds are allowed by law, your tires should be set at the pressures recommended on your certification label. **Sustained driving at speeds faster than 85 mph (140 km/h) is not advised** unless your vehicle has special high speed tires available from many tire dealers.
2. Tire pressure may increase as much as 40 kPa (6 psi) when hot.
3. Higher than recommended pressure can cause:
   - Hard ride.
   - Tire bruising or carcass damage.
   - Rapid tread wear at center of tire.
4. Lower than recommended pressure can cause:
   - Tire squeal on turns.
   - Hard steering.
   - Rapid and uneven wear on the edge of the tread.
   - Tire rim bruises and rupture.
   - Tire cord breakage.
   - High tire temperatures.
   - Reduced handling.
   - High fuel consumption.
5. Unequal pressure on same axle can cause:
   - Uneven braking.
   - Steering lead.
   - Reduced handling.
   - Swerve on acceleration.

WHEEL REMOVAL

Some wheels can be difficult to remove from the vehicle due to foreign material or a tight fit between the wheel center hole and the hub or rotor. Excessive force such as hammering the wheel or tire can cause damage and is not recommended. Slight tapping of the tire side wall with a rubber mallet is normally acceptable. Use this procedure to remove the wheel and tire assembly if it does not break free of the hub using a standard removal procedure.

CAUTION: If penetrating oil gets on the vertical surfaces between the wheel and the rotor or drum it could cause the wheel to work loose as the vehicle is driven, resulting in loss of control and an injury accident. Never use heat to loosen a tight wheel. It can shorten the life of the wheel, studs, or hub and bearing assemblies. Wheel nuts must be tightened in sequence and to the specified torque to avoid bending the wheel or rotor (figure 7).

1. Tighten all the lug nuts on the affected wheel.
   - Do not torque.
2. Raise the vehicle.
3. Loosen each nut two turns.
4. Lower the vehicle to the floor.
5. Rock the vehicle from side to side to loosen the wheel. Or rock the vehicle from forward to reverse allowing the vehicle to move several feet in each direction. Apply quick, hard jabs on the brake pedal to loosen the wheel.
6. Raise the vehicle and remove the lug nuts and the wheel.

CAUTION: Before re-installing the wheels, remove any build up of corrosion on the wheel mounting surface and brake drum or disc mounting surface by scraping and wire brushing. Installing wheels with poor metal-to-metal contact at the mounting surfaces can cause wheel nuts to loosen. This can lead to a wheel coming off while the vehicle is moving, possibly causing loss of control and personal injury.

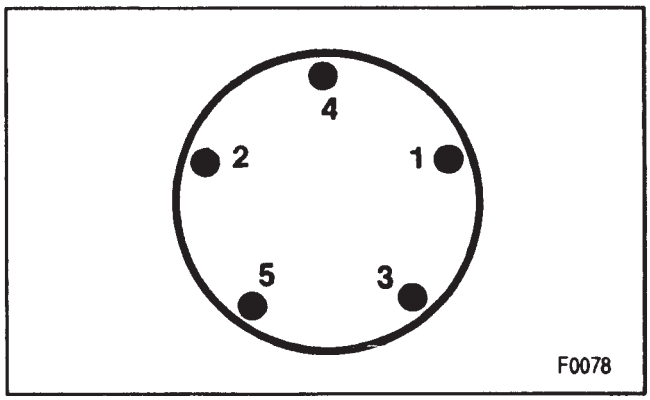

Figure 7—Wheel Nut Tightening Sequence

Wheel nuts must be tightened in sequence and to a specified torque to avoid bending the wheel, brake drum, or brake rotor (figure 7).

INSTALLING THE TIRE AND WHEEL ASSEMBLY

CAUTION: Before re-installing the wheels, remove any build up of corrosion on the wheel mounting surface and brake drum or disc mounting surface by scraping and wire brushing. Installing wheels with poor metal-to-metal contact at the mounting surfaces can cause wheel nuts to loosen. This can lead to a wheel coming off while the vehicle is moving, possibly causing loss of control and personal injury.

Install or Connect

1. Wheel and tire assembly in position on the hub/rotor, and lug nuts installed loosely.
2. Turn the wheel until one nut is at the top of the bolt circle. Tighten the nut just snug.

NOTICE: See "Notice" on page 3E-1.

3. Snug up the remaining nuts criss-cross to minimize runout.

Tighten

- Nuts to 120 N·m (90 ft. lbs.).
- Tighten evenly and alternately to avoid excessive runout (figure 7).

TIRE ROTATION

To equalize wear, rotate tires at intervals specified in SECTION 0B. In addition to scheduled rotation, the tire and wheel assembly should be rotated whenever uneven tire wear is noticed (figure 8).

When rotating tires, always install the locking nut nearest the tire valve stem so that it remains opposite the balance weight. This procedure will improve the wheel balance by compensating for the heavy locking wheel nut.

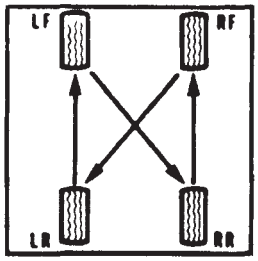

DO NOT INCLUDE "TEMPORARY USE ONLY SPARE TIRE IN ROTATION

F5408

Figure 8—Tire Rotation

Due to their design, radial tires tend to wear faster in the shoulder area, particularly in front positions. Radial tires in non-drive locations may develop an irregular wear pattern that can increase tire noise if not rotated.

TIRE DISMOUNTING

NOTICE: Use a tire changing machine to dismount tires. Do not use hand tools or tire irons alone to remove the tire from the wheel. Damage to the tire beads or wheel rim could result.

- Follow the tire changing machine manufacturer's instructions to properly separate the tire from the wheel.

TIRE REPAIR

There are many different materials and techniques on the market to repair tires. Tire manufacturers have published detailed instructions on how and when to repair their tires. These instructions can be obtained from the tire manufacturer.

Due to the thin 3.2 mm (4/32 in) tread depth on temporary spare tires, tire repair is not recommended.

TIRE MOUNTING

RADIAL PLY TIRES

NOTICE: Recommended vehicle tire mounting and inflation procedures are especially important with radial tires. Failure to follow these procedures can cause bead deformation in both tube type and tubeless tires due to incorrect bead seating. Bead deformation may lead to chafing, lower sidewall and bead area cracking, eccentric wear, ride vibration, and non-retreadable casings.

Important

- Only use rims approved for radial tire usage by the rim manufacturer.

1. Clean the rim.
   - Remove all rust and other foreign material.
2. Lubricate tire beads and rim bead seats with an approved rubber lubricant.

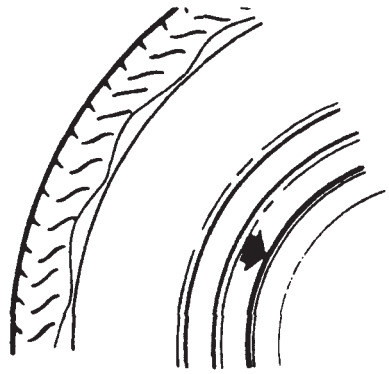

F5496

Figure 9—Locating Ring

NOTICE: Do not use silicone base lubricants; this could cause the tire to slip on the wheel.

3. Inflate the tire to operating pressure.
   - Due to the construction of radial truck tires, particularly in the lower sidewall and bead area, it may be difficult to get the tire to take air.
   - An inflation aid may be necessary to help seat the bead of tubeless radial tires. Two types of inflation aids are commercially available; metal rings which use compressed air to seat beads, and rubber rings which seal between the tire bead and rim bead seat allowing the bead to move out and seat. Lubrication is necessary with both aids.
4. Check the spacing between the rim flange and one of the three lower sidewall rim line rings while the tire is laying flat to verify bead seating.
   - Measurements must be taken each 90 degrees around the circumference of the rim flange.
   - If the spacing is uneven around the bead from side to side, repeat steps 1 through 3, then recheck.

Important

- This procedure must be followed to insure proper bead seating in order to prevent bead deformation.
- Radial tires, as well as bias tires, must be mounted and inflated in accordance with safety precautions.

CHECKING WHEEL AND TIRE RUNOUT

Some vehicles are sensitive to tire and wheel assembly runout. Tires that are satisfactory on one vehicle might be unsatisfactory on another. When analyzing vibration problems, it is important to keep this in mind. In addition, different wheel positions on a vehicle may have different sensitivity levels. You should check for wheel runout or total wheel and tire runout in the following cases:

- If the tire and wheel vibration occurs below 40 miles per hour.
- If all wheels are balanced within one ounce of static balance and five ounces of dynamic balance, and a vibration occurs.
- If there appears to be a bulge in a tire or an out-of-round condition as a tire rotates on a balancer.
- If any wheel damage is noticed.
- If there is a poor wheel fit on the hub and the vehicle exhibits vibration.

MEASURING WHEEL AND TIRE RUNOUT

Runout measurements of the wheel and tire assembly can be taken both on and off the vehicle. These measurements can be taken radially and laterally. A dial indicator equipped with a roller contact point, mounted on a heavy, solid base is the measurement device.

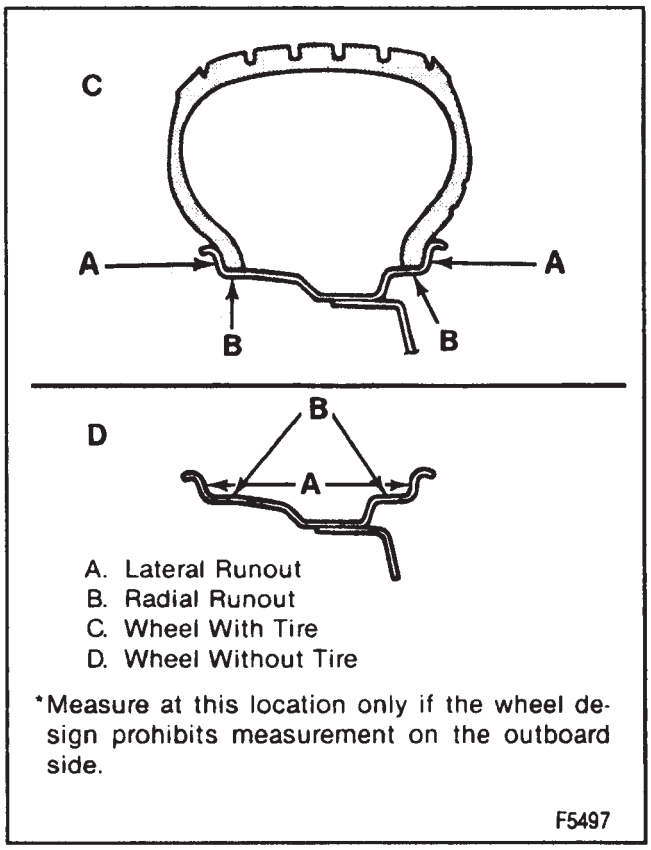

Figure 10—Wheel Runout

WHEEL RUNOUT

Wheel runout should be measured with an accurate dial indicator. Measurements may be taken with the wheel installed on or off the vehicle using an accurate mounting surface such as on a wheel balancer. Measurements may also be taken with or without the tire mounted on the wheel.

Radial runout and lateral runout should be measured on both the inboard and outboard rim flanges (figure 10). With the dial indicator firmly in position, slowly rotate the wheel one revolution and record the total indicator reading. If any measurement exceeds specifications, and there is vibration that wheel balancing will not correct, the wheel should be replaced. Disregard any indicator readings due to welds, paint runs, scratches, etc.

- STEEL WHEELS

Radial runout 0.040"
Lateral runout 0.045"

- ALUMINUM WHEELS

Radial runout 0.030"
Lateral runout 0.030"

RADIAL RUNOUT

Radial runout is the egg-shaped difference from a perfect circle. Measure tire radial runout from the center tire tread rib although other tread ribs can be measured as well. The total runout is the reading from the gage, and the high spot is the location of the maximum runout. On a wheel, if either flange is beyond specifications, replace the rim (figure 11).

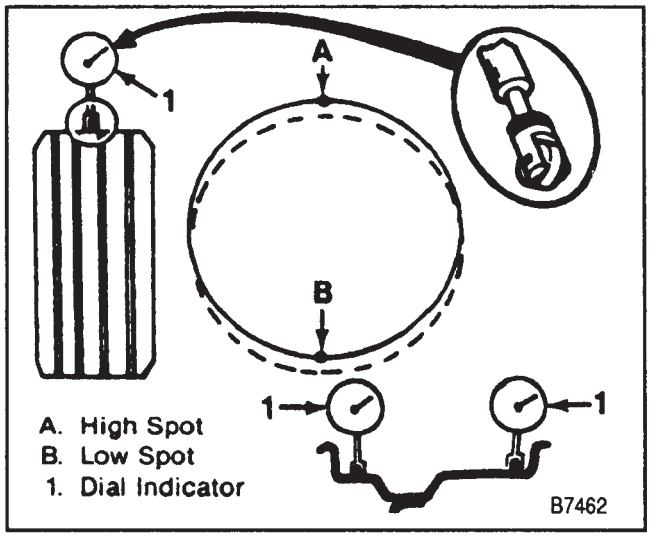

Figure 11—Measuring Radial Runout

LATERAL RUNOUT

Lateral runout is a sideways variation causing a twist or wobble and is measured on a side surface. On the tire and wheel assembly, measure the sidewall of the tire as close to the trend shoulder design edge as possible. The total runout is the reading from the gage, and the high spot is the location of the maximum runout. On a rim, if either flange is beyond guidelines, replace the rim (figure 12).

MEASUREMENT PROCEDURES

1. Inflate the tires to specifications.
2. Warm up the tires prior to taking measurements to eliminate flat spotting.
   - Newly installed tires usually do not require warming up.
3. Raise the vehicle on a lift.
   - If measurements will be taken off the vehicle, mount each tire and wheel assembly on a dynamic balance machine.
4. Mark the tire and wheel assemblies for exact replacement.
   - Mark a wheel hub bolt and its exact position on the wheel.
   - Mark each tire and wheel assembly for replacement on the exact hub/rotor assembly.
5. Take either a radial or lateral runout measurement.
   - Place the dial indicator in position.
   - Rotate the tire and wheel assembly (or just the wheel) to find its low spot Adjust the dial indicator to read zero.
   - Rotate again to verify the low spot location—the dial indicator must return to zero.
   - Disregard any instantaneous dial jumps due to welds, paint runs, scratches, etc. on the wheel.
   - Rotate the tire and wheel assembly (or just the wheel) and note the amount of variance (runout) from zero. Locate and mark the high spot.
6. If there is a large difference in runout measurements from on-vehicle to off-vehicle, the runout problem is likely due to excessive runout of the bolt circle or hub.
7. If measured runouts are not within the guidelines (located in "Wheel Runout Specifications" at the end of this section), proceed to "Vectoring" to correct the problem.

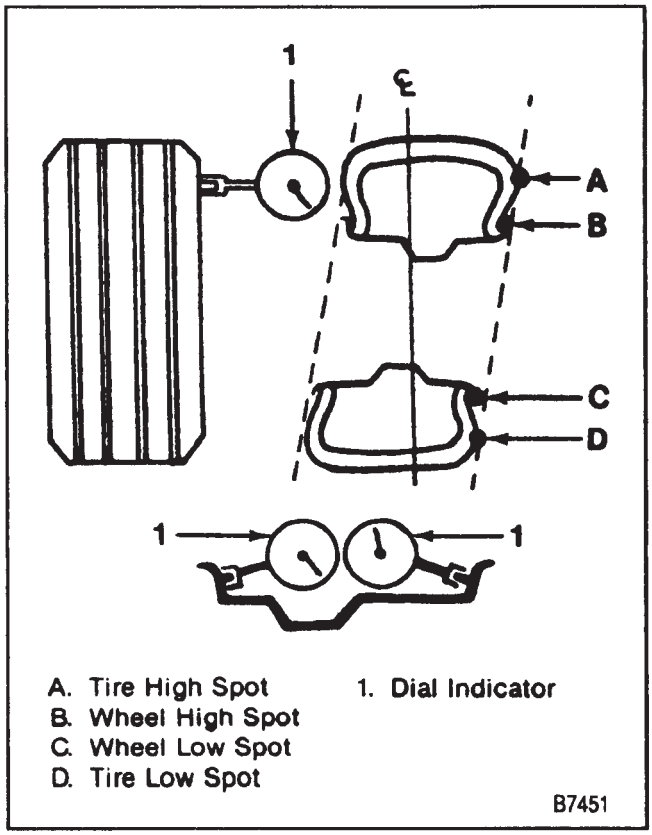

Figure 12—Measuring Lateral Runout

VECTORING

Vectoring is a technique used to reduce radial or lateral runout—and to even dynamic balance on tire and wheel assemblies. Vectoring can be accomplished by the positioning of the tire on the wheel and the positioning of the tire and wheel assembly on the hub/rotor.

Important

- Always rebalance the tire and wheel assembly after vectoring.

Tire To Wheel Vectoring

1. Determine which runout needs to be minimized.
   - Determine visually.
2. If radial runout is the problem, take a measurement on the center tread rib.
   - If the trend is uneven, wrap tape tightly around the tire, record the runout magnitude, and mark the high spot location (figure 13).
3. If lateral runout is the problem, take a measurement on the sidewall just below the edge of the tread shoulder.
   - Record the runout magnitude, and mark the high spot location.
4. Mark the tire sidewall at the valve location.
   - This is the 12 o'clock position.
   - The location of the high spot is always with respect to the clock location on the wheel.

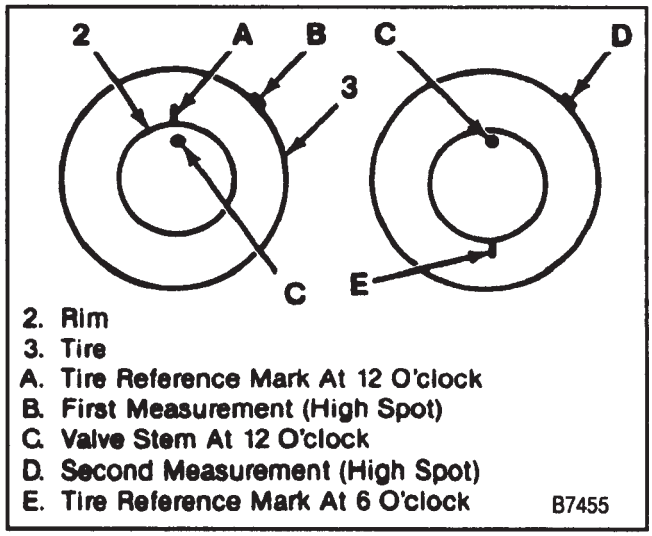

Figure 13—Checking Tire to Wheel Vectoring

5. Break the tire and wheel assembly down on a tire mounting machine and rotate the tire 6 hours (180 degrees) on the rim (figure 13).
   - Reinflate the tire and measure the runout in question.
   - Record the magnitude and the location of the high spot (Valve stem is 12 o'clock).
6. If the clock location of the high spot remained at or near the clock location of the original high spot, the rim is the major contributor to the runout problem.
   - Confirm by removing the tire from the wheel and check the wheel rim runout.
   - If the wheel rim runout exceeds guidelines, replace the wheel.
7. If the clock position of the high spot is 6 hours from the original high spot, the tire is the major contributor to the runout problem (figure 14).
   - Replace the tire.
8. After correcting the tire to the wheel vectoring, rebalance the wheel and tire assembly.

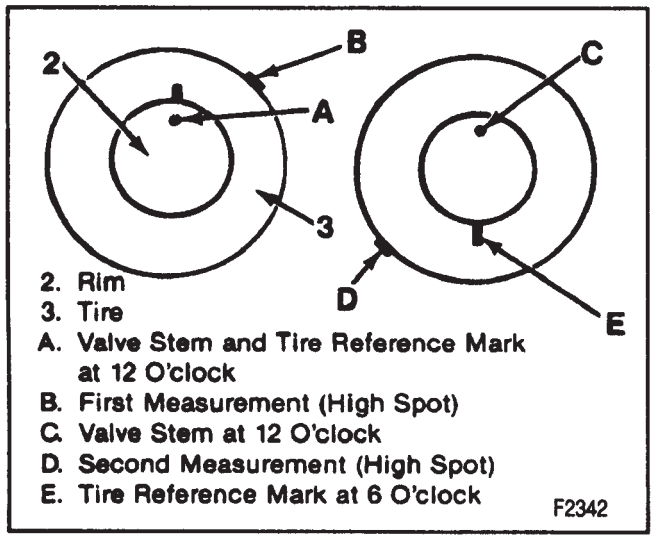

Figure 14—Tire to Wheel Vectoring—Excessive Tire Runout

Tire And Wheel Assembly To Hub/Rotor Vectoring

1. Mark the wheel hub bolt nearest the valve stem for reference (figure 15).
2. Rotate the assembly two wheel hub bolts and recheck the runout (figure 15).
   - Several positions may have to be tried to locate the optimum location.
   - This can be effective for both radial and lateral runouts.
3. If there is some looseness in the wheel hub bolt holes, radial runout can be reduced by loosening the hub bolt nuts slightly, moving the wheel position on the bolts and then retightening the nuts.
4. Balance the tire and wheel to hub/rotor assembly.
   - Compensates for any imbalance in the brake rotor, drum, or wheel cover.

BALANCING THE TIRE AND WHEEL

There are two types of tire and wheel balancing, static and dynamic. Static balance is the equal distribution of weight around the wheel. Assemblies that are statically unbalanced cause a bouncing action called wheel tramp (figure 16). This condition will eventually cause uneven tire wear.

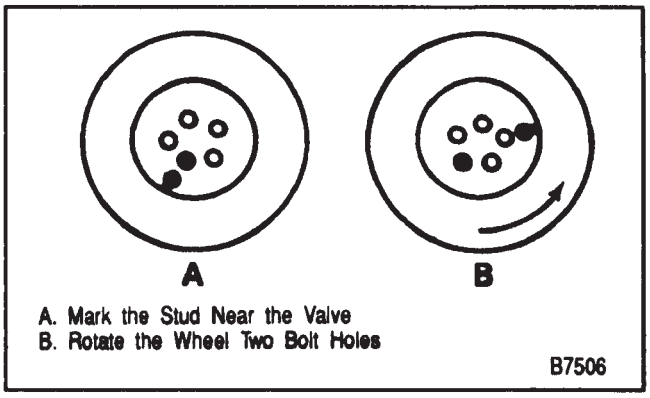

Figure 15—Tire and Wheel Assembly to Hub/Rotor Vectoring

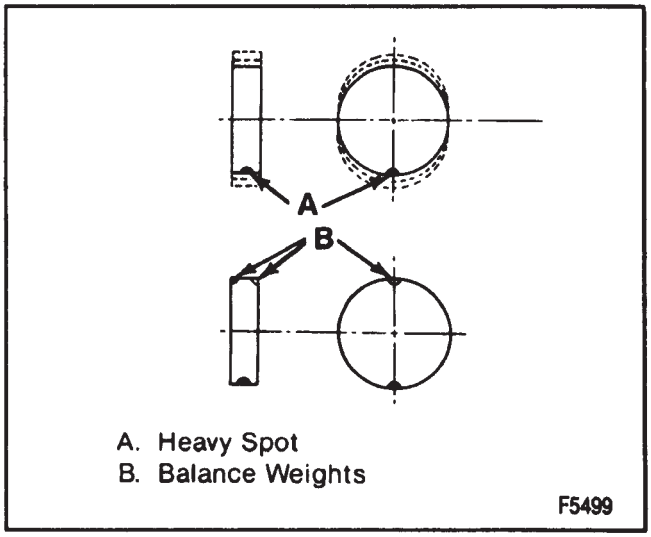

Figure 16—Static Unbalance

Dynamic balance is the equal distribution of weight on each side of the centerline so that when the assembly spins there is no tendency for the assembly to move from side to side (figure 17). Assemblies that are dynamically unbalanced may cause wheel shimmy.

GENERAL BALANCE PRECAUTIONS

Deposits of foreign material must be cleaned from the inside of the wheel. Stones should be removed from the tread in order to avoid operator injury during spin balancing and to obtain a good balance. The tire should be inspected for any damage, then balanced according to the equipment manufacturer's recommendations.

Whenever a heavier, solid locking wheel nut is used to replace a standard nut, it should be installed nearest the valve stem, and a 14-gram (1/2-ounce) balance weight should be added 180°opposite the locking nut on the wheel's inboard side.

When rotating tires, always install the locking nut nearest the tire valve stem so that it remains opposite the balance weight. This procedure will improve the wheel balance by compensating for the heavy locking wheel nut.

OFF-VEHICLE BALANCING

Most electronic off-vehicle balancers are more accurate than the on-vehicle spin balancers. They are easy to use and give a dynamic (two-plane) balance. Although they do not correct for drum or rotor unbalance, as does on-vehicle spin balancing, this is overcome by their accuracy. When balancing off-vehicle, the wheel should locate on the balancer with a cone through the back side of the center pilot hole (not by the wheel stud holes).

ON-VEHICLE BALANCING

When needed, on-vehicle balancing will help correct vibrations due to brake drum, rotor, and wheel cover imbalance.

When balancing on-vehicle, remove the balance weights from the off-vehicle dynamic balance. If more than 28 grams (one ounce) of additional weight is required, it should be split between the inner and outer rim flange.

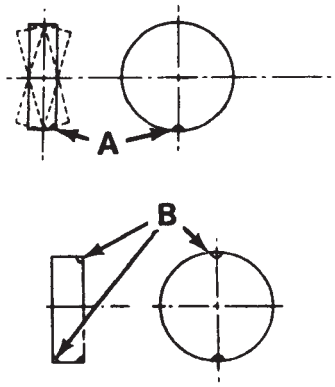

A. Heavy Spot
B. Balance Weights

F5498

Figure 17—Dynamic Unbalance

NOTICE: The driven tire and wheel assemblies should be spun using the engine. Limit speed as stated in the following Caution.

CAUTION: Do not spin the drive wheels faster than 35 mph (55 km/h) as indicated by the speedometer. This limit is necessary because the speedometer indicates only one-half of the actual wheel speed when one drive wheel is spinning and the other drive wheel is stopped. Personal injury and damage may result from high speed spinning.

CAUTION: On vehicles equipped with limited slip rear axles, do not attempt to balance a tire on a drive wheel with the other drive wheel on the ground. The vehicle may drive through this wheel and cause the vehicle to move unexpectedly, resulting in personal injury and property damage.

To distinguish between standard rear axle and a limited slip rear axle, check for Positraction (G80) on the Service Parts Identification label.

BALANCE WEIGHTS

If more than 85 grams (3 ounces) are needed, the balance weights should be split as equally as possible between the inboard and outboard flanges.

Balancing of the optional factory aluminum wheels requires the use of special polyester coated clip-on type balance weights. Coated balance weights are used on both the inboard and outboard rim flanges and are designed to fit over the thicker rim flange of the aluminum wheel. These weights will not discolor, corrode, or damage the appearance of the wheel. When installing the coated balance weights, care must be taken so that the coating does not crack. It is recommended that a teflon, or equivalent, tipped hammer be used.

Adhesive balance weights are also available. Use the manufacturer's procedure to install adhesive balance weights.

CORRECTING NON-UNIFORM TIRES

There are two ways to correct tires which cause a vibration even though they are properly balanced. One method uses an automatic machine which loads the tire and buffs small amounts of rubber from high spots on the outer two tread rows. Correction by this method is usually permanent and, if done properly, does not significantly affect the appearance or tire tread life. Tire trueing with a blade-type machine is not recommended as this reduces the tread life substantially and often does not permanently correct the problem.

Another method is to dismount the tire and rotate it 180 degrees on the rim. It is important that this be done on tire and wheel assemblies which are known to be causing a vibration, as it is just as likely to cause good assemblies to vibrate.

SPARE TIRE CARRIER REPLACEMENT

FRAME MOUNTED TIRE CARRIER

Remove or Disconnect (Figure 18)

1. Spare tire from its storage location.
2. Bolts (3).
3. Pin (5) and retainer (6).
4. Hoist (2) from the cross member.

Install or Connect (Figure 18)

1. Hoist (2).
   - Align the hoist with the cross member and shaft (1).
2. Pin (5) and retainer (6).

NOTICE: See "NOTICE" on page 2A-1.

3. Bolts (3).

Tighten

- Bolts (3) to 15 N.m (11 ft. lbs.).

4. Spare tire into its storage location.

REAR MOUNTED TIRE CARRIER

Remove or Disconnect (Figure 18)

1. Spare tire from carrier.
2. Open the carrier assembly (10).
3. Bolts (2) and washers (8).
4. Carrier assembly from the vehicle.

Install or Connect (Figure 18)

1. Carrier assembly to the vehicle.
2. Washers (8) and bolts (2).

Tighten

- Bolts (2) to 37 N.m (27 ft. lbs.).

3. Spare tire to the carrier.
4. Close the carrier assembly.

Important

- Close the carrier assembly firmly enough to engage both latches, or it will rattle when the vehicle is in motion.

ALUMINUM WHEELS

Aluminum wheels should be cleaned and waxed regularly. Do not use abrasive cleaners, as they could damage the protective coating.

ALUMINUM WHEEL HUB CAP

Remove or Disconnect

1. Tire and wheel assembly.
2. Place a block of wood approximately 50 mm (2 inches) in diameter with a squared off end against the back surface of the cap. A sharp hammer blow on the block of wood will remove the cap.

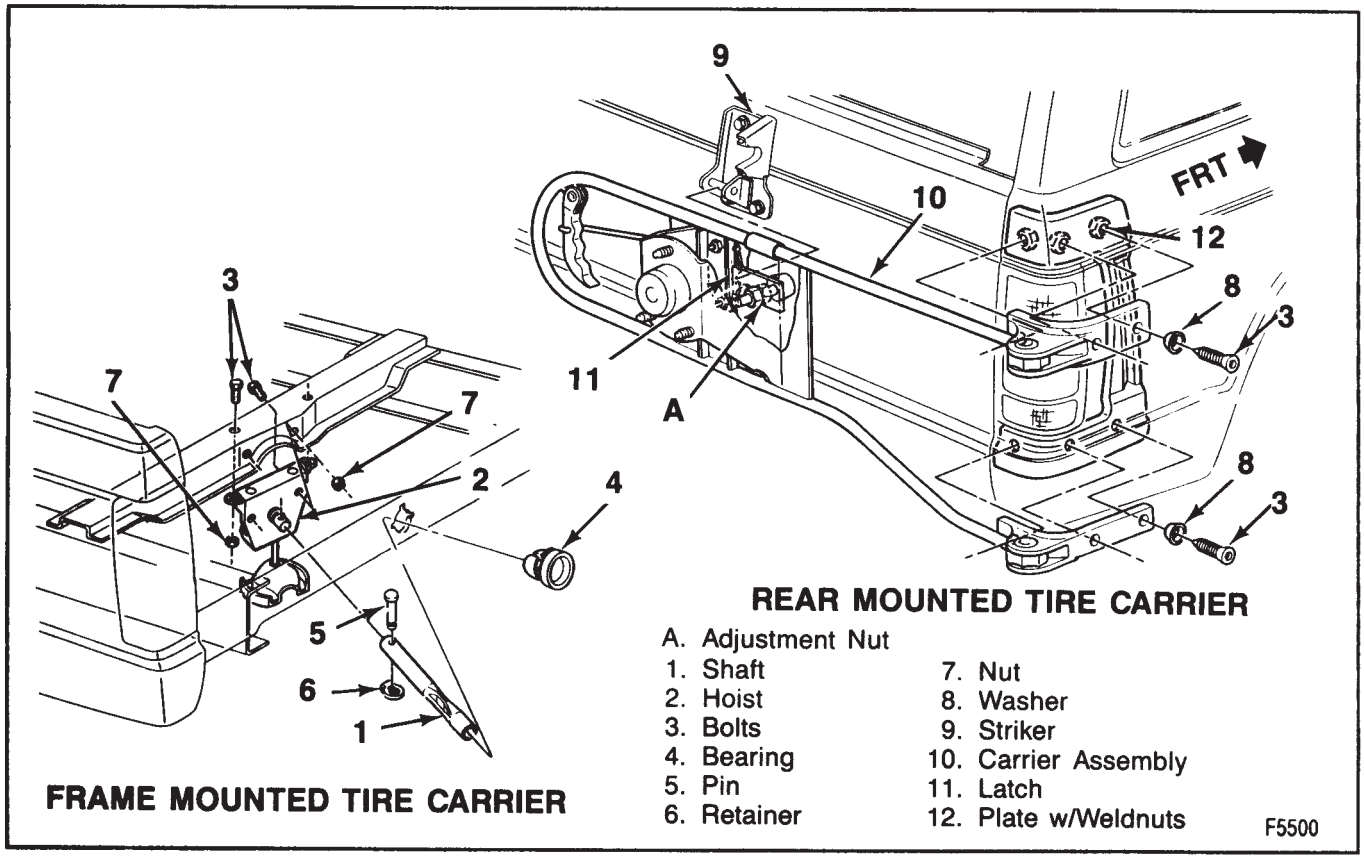

Figure 18—Spare Tire Carriers

Install or Connect

NOTICE: Failure to hit the cap squarely without the load distributed evenly could result in permanent damage to the cap.

1. Place cap into position at wheel opening and place a block of wood at least 75 mm (3 inches) in diameter against cap face. Install the cap by striking the block of wood with a hammer.
2. Tire and wheel assembly.

ALUMINUM WHEEL POROSITY REPAIR

1. Remove the tire and wheel assembly.
2. Locate leaking areas by inflating tire to 345 kPa (50 psi) and dipping the tire and wheel assembly into a water bath.
3. Mark leak areas and remove the tire from the wheel.
4. Scuff the inside surface at leak area with 80 grit sandpaper and clean the area with general purpose cleaner such as 3M #08984, or equivalent.
   Apply 3 mm (1/8-inch) thick layer of adhesive/sealant PN 1052366, or equivalent, to the leak area and allow 12 hours of drying time.
5. Mount the tire on the wheel, pressurize to 345 kPa (50 psi) and check for leaks.

CAUTION: To avoid serious personal injury, do not stand over tire when inflating. The bead may break when the bead snaps over the safety hump. Do not exceed 275 kPa (40 psi) pressure when inflating any tire if beads are not seated. If 275 kPa (40 psi) pressure will not seat the beads, deflate, relubricate the beads and reinflate. Overinflation may cause the bead to break and cause serious personal injury.

6. Adjust tire pressure to meet specifications.
7. Balance the tire and wheel assembly.
8. Install the tire and wheel assembly.

ALUMINUM WHEEL REFINISHING

A protective clear coating is applied to the surface of original equipment cast aluminum wheels. A surface degradation condition can begin to develop if frequent, repeated automatic car wash cleaning abrades or wears off the factory applied protective clear coating. This can happen at some automatic car wash facilities using aggressive silicon carbide tipped tire brushes to clean white walls and tires. Once the protective clear coating is damaged, exposure to caustic cleaners and/or road salt further causes surface degradation. The following procedure details how to strip, clean, and recoat aluminum wheels that are affected by these conditions.

- Mark the wheel and tire for position on the vehicle and remove.
- Mark the position of the wheel weights and remove. Note: It is not necessary to remove the tire from the wheel to perform this procedure. However, if the tire is removed, its position to the wheel must be marked using the valve stem as an index. When remounting, the tire should be returned to its original position on the wheel.
- Wash the wheel inside and out with a water base all purpose cleaner. Remove grease and oil with a solvent cleaner.

Accent Color Preparation

- Sand over painted areas that will not require recoloring with 400 grit (wet or dry) to promote adhesion of the clear coat.

Surface Damage, Clear Coat Damage

- Mount the wheel on a brake lathe and spin slowly. Sand the wheel with a backing block or pad while holding the abrasive flat to the surface of the wheel and moving slowly back and forth from center to outer edge to remove imperfections.
  1. Sand with 80 grit*
  2. Sand with 150 grit
  3. Sand with 240 grit
     - Never use abrasives coarser than 80 grit.

Slight Clear Coat damage on Unpainted wheels.

1. Remove the original clear coating.
   - Apply a chemical stripper to the wheel surface and allow the chemical to penetrate the coating.
   - Remove the stripper following the manufacturers recommendations.
   - Rinse the wheel surface thoroughly with clean water.

CAUTION: Use of eye goggles is necessary to prevent personal injury.

2. Remove surface oxidation.
   - Sand the wheel with 240 grit (wet or dry) while rotating the wheel on a slow spinning brake lathe, or by mounting it on the vehicle and spinning the wheel by hand. This should restore the machined appearance and promote adhesion.

CAUTION: To avoid serious personal injury, do not use vehicle power to rotate wheel while sanding.

3. Recoat the wheels.
   - Clean the surface of any contaminants by washing with soap and water.
   - Spray the wheel with Amchem #33 or equivalent and let soak 1 to 3 minutes.
   - Rinse with water and blow dry.
   - Mask the tire off.
   - Finish with Ditzler Delclear acrylic urethane and Ditzler Ultra urethane additive or equivalent. Three coats:
     1st coat - Light mist coat, let flash.
     2nd coat - Light, let flash.
     3rd coat - Heavy, double wet coat.
   - Let dry for 24 hours or if necessary, flash for 30 minutes, force dry at 140°for 30 minutes, and allow to cool for 30 minutes before mounting.

- Rebalance the tire and wheel assembly by replacing the original balance weights with nylon coated weights.
- Mount the weights in the marked positions and remove the masking from the tire.

SPECIFICATIONS

Wheel Size	Bolt Holes	Bolt Circle Diameter (in)	Bolt Size (in)	Rim Type	Rim Width (in)	Offset (in)	Wheel Rating		Tire Size
							kg/lbs.	kpa/psi	
15 x 6.00	5	5	.500	1-piece	6.0	.50	716/1575	240/35	P205, P215
15 x 6.50 Styled	5	5	.500	1-piece	6.5	.38	716/1575	240/35	P205, P215 P245
15 x 6.50 Aluminum	5	5	.500	1-piece	6.5	.38	716/1575	240/35	P205, P215 P245
16 x 4.00 Spare	5	5	.500	1-piece	4.0	1.3	716/1575	414/60	T145, T155
16 x 4 Spare	5	5	.500	1-piece	4.0	1.3	716/1575	414/60	T155

Lug Nut Torque ..... 120 N·m (90 ft. lbs.)
Tire Chain ..... Type PL; SAE Class "S"; 1100 Series
Wheel Radial Runout
Steel 0.040-inch
Aluminum 0.030-inch
Wheel Lateral Runout
Steel 0.045-inch
Aluminum 0.030-inch

T2063

SECTION 3F1

STEERING COLUMN - STANDARD

NOTICE: When fasteners are removed, always reinstall them at the same location from which they were removed. If a fastener needs to be replaced, use the correct part number fastener for that application. If the correct part number fastener is not available, a fastener of equal size and strength (or stronger) may be used. Fasteners that are not reused, and those requiring thread locking compound will be called out. The correct torque value must be used when installing fasteners that require it. If the above conditions are not followed, parts or system damage could result.

CONTENTS

SUBJECT	PAGE
General Description	3F1- 1
Diagnosis of the Steering Column	3F1- 2
On-Vehicle Service	3F1- 8
Inspection	3F1- 8
Steering Wheel Replacement	3F1- 8
Intermediate Shaft Replacement	3F1- 9
Steering Column Replacement	3F1- 9
Turn Signal Lever Replacement	3F1-10
Buzzer Switch Assembly Replacement (Column Shift)	3F1-13
Steering Column Lock Cylinder Set Replacement (Column Shift)	3F1-13
Turn Signal Switch Assembly Replacement (Column Shift)	3F1-14
Pivot and Pulse Switch Assembly Replacement (Column Shift)	3F1-14
Dimmer Switch Assembly Switch Replacement (Column Shift)	3F1-14
Ignition Switch Assembly Replacement (Column Shift)	3F1-14
Buzzer Switch Assembly Replacement (Floor Shift)	3F1-24
Steering Column Lock Cylinder Set Replacement (Floor Shift)	3F1-24
Turn Signal Switch Assembly Replacement (Floor Shift)	3F1-26
Pivot Switch Actuator Assembly Replacement (Floor Shift)	3F1-26
Dimmer Switch Assembly Switch Replacement (Floor Shift)	3F1-30
Ignition Switch Assembly Replacement (Floor Shift)	3F1-30
Unit Repair - Column Shift	3F1-11
Unit Repair - Floor Shift	3F1-22
Specifications	3F1-34
Special Tools	3F1-34

GENERAL DESCRIPTION

The locking energy-absorbing steering column includes three important features in addition to the steering function:

1. The column is energy-absorbing, designed to compress in a front-end collision to minimize the possibility of injury to the driver of the vehicle.
2. The ignition switch and lock are mounted conveniently on the column.
3. With the column mounted lock, the ignition, steering and gearshifting, operation can be locked to inhibit theft of the vehicle.

The column may be disassembled and reassembled. To insure the energy-absorbing action, it is important that the specified screws, bolts and nuts be used only as designated and that they are tightened to the specified torque.

NOTICE: When the column is removed from the vehicle, such actions as a sharp blow on the end of the steering shaft or shift lever, leaning on the column assembly, or dropping of the assembly could shear or loosen the plastic fasteners that maintain column rigidity.

DIAGNOSIS OF THE STEERING COLUMN

PROBLEM	POSSIBLE CAUSE	CORRECTION
Lock System Will Not Unlock	1. Lock bolt damaged. 2. Faulty lock cylinder. 3. Damaged housing. 4. Damaged or collapsed sector. 5. Damaged rack.	1. Replace the lock bolt. 2. Replace or repair the lock cylinder. 3. Replace the housing. 4. Replace the sector. 5. Replace the rack.
Lock System Will Not Lock	1. Lock bolt spring is broken. 2. Damaged sector tooth. 3. Faulty lock cylinder. 4. Damaged housing. 5. Damaged rack. 6. Interference between the bowl and coupling. 7. Ignition switch stuck. 8. Actuator rod restricted or bent. 9. Transmission linkage adjustment is incorrect.	1. Replace the spring. 2. Replace the sector tooth. 3. Replace the lock cylinder. 4. Replace the housing. 5. Replace the rack. 6. Adjust or replace. 7. Adjust or replace. 8. Adjust or replace. 9. Adjust.
Lock System—High Lock Effort	1. Lock cylinder is faulty. 2. Ignition switch is faulty. 3. Rack preload spring is broken or weak. 4. Burrs on the sector, rack, housing, support, tang of the shift gate or actuator rod coupling. 5. Bent sector shaft. 6. Distorted rack. 7. Bent or restricted actuator rod. 8. Ignition switch mounting bracket is bent.	1. Replace the lock cylinder. 2. Replace the ignition switch. 3. Replace the spring. 4. Remove the burrs. 5. Replace the shaft. 6. Replace the rack. 7. Straighten or replace the rod. 8. Straighten or replace the bracket.
Lock Cylinder—High Effort Between The "Off" and "Off-Lock" Positions	1. Burr on tang of shift gate. 2. Distorted rack.	1. Remove the burr. 2. Replace the rack.
Sticks In "Start" Position	1. Actuator rod is deformed. 2. Any high effort condition.	1. Straighten or replace the rod. 2. See "correction" under either high effort diagnosis.
Key Cannot Be Removed In The "Off-Lock" Position	1. Ignition switch is not set correctly. 2. Faulty lock cylinder.	1. Adjust ignition switch. 2. Replace the lock cylinder.
The Lock Cylinder Can Be Removed Without Depressing The Retainer	1. Faulty retainer. 2. Burr over the retainer slot in the housing cover.	1. Replace the lock cylinder. 2. Remove the burr.
Lock Bolt Hits The Shaft Lock In The "Off" And "Park" Positions	Ignition switch is not set correctly.	Adjust the ignition switch.

DIAGNOSIS OF THE STEERING COLUMN (cont'd)

PROBLEM	POSSIBLE CAUSE	CORRECTION
Noise In The Column	1. Flexible coupling pulled apart. 2. Column not correctly aligned. 3. One click in Off-Unlock position and when the steering wheel is moved. 4. Horn contact ring not lubricated. 5. Lack of grease on the bearings or bearing surface. 6. Lower shaft bearing is tight or frozen. 7. Upper shaft bearing is tight or frozen. 8. Lock plate retaining ring is not seated. 9. Steering shaft snap ring is not seated. 10. Shroud or housing is loose. 11. Sheared intermediate shaft plastic joint.	1. Align the column and replace the flexible coupling. 2. Align the column. 3. Normal seating of the lock bolt. 4. Lubricate. 5. Lubricate the bearings. 6. Replace the bearing. Inspect the shaft and replace if scored. 7. Replace the housing assembly. 8. Replace the retaining ring. Inspect for proper seating in the groove. 9. Replace the snap ring. Inspect for proper seating in the groove. 10. Tighten mounting screws. 11. Repair or replace the steering shaft. Align the column.
High Steering Shaft Effort	1. Column assembly is misaligned in the vehicle. 2. Tight or frozen upper or lower bearings. 3. Binding intermediate shaft U-joints.	1. Align correctly. 2. Replace the bearings. 3. Repair or replace the intermediate shaft.
High Shift Effort	1. Column assembly is misaligned in the vehicle. 2. Lower bowl bearing is not aligned correctly. 3. Lack of grease on the bearing or seal areas. 4. Shift tube is bent or broken.	1. Align correctly. 2. Align correctly. 3. Lubricate bearings and seals. 4. Replace the shift tubes.
Improper Transmission Shifter	1. Sheared shift tube joint. 2. Improper transmission linkage adjustment. 3. Loose lower shift lever. 4. Sheared lower shift lever weld.	1. Replace the shift tube assembly. 2. Adjust the linkage. 3. Replace the shift tube assembly. 4. Replace the shift tube assembly.
Lash In Mounted Column Assembly	1. Column mounting bracket bolts loose. 2. Broken weld nuts on the jacket. 3. Column bracket capsule sheared.	1. Tighten to specifications. 2. Replace the jacket assembly. 3. Replace the bracket assembly.
Dimmer Switch Will Not Function	1. Loose connector at the dimmer switch. 2. Improper adjustment. 3. Internally damaged or worn switch.	1. Tighten or replace. 2. Readjust. 3. Replace.
Turn Signal Will Not Cancel	1. Loose switch mounting screws. 2. Switch or anchor bosses broken. 3. Broken, missing or out of position detent, return or cancelling spring. 4. Uneven or incorrect cancelling cam to cancelling spring interference.	1. Tighten screws to 2.8 N·m (25 in. lbs.). 2. Replace the switch. 3. Reposition or replace the springs as required. 4. Adjust the switch position. • If the interference is correct and switch will still not cancel, replace the switch. • If the interference cannot be corrected by the switch adjustment, replace the cancelling cam.

DIAGNOSIS OF THE STEERING COLUMN (cont'd)

PROBLEM	POSSIBLE CAUSE	CORRECTION
Turn Signal Difficult To Operate	1. Actuator rod loose. 2. Yoke broken or distorted. 3. Loose or misplaced springs. 4. Foreign parts and/or materials. 5. Switch mounted loosely.	1. Tighten mounting screw to 1.4 N·m (12 in. lbs.). 2. Replace the switch. 3. Reposition or replace the springs. 4. Remove the foreign parts and/or material. 5. Tighten mounting screws to 2.8 N·m (25 in. lbs.).
Turn Signal Will Not Indicate Lane Change	1. Broken lane change pressure pad or spring hanger. 2. Broken, missing or misplaced lane change spring. 3. Jammed base or wires.	1. Replace the switch. 2. Replace or reposition as required. 3. Loosen mounting screws, reposition base or wires and tighten the screws to 2.8 N·m (25 in. lbs.).
Turn Signal Will Not Stay In Turn Position	1. Foreign material or loose parts impending movement of the yoke. 2. Broken or missing detent or cancelling springs. 3. None of the above.	1. Remove material and/or parts. 2. Replace the spring. 3. Replace the switch.
Hazard Switch Cannot Be Turned Off	Foreign material between hazard support cancelling leg and yoke.	Remove the foreign material. • Replace the turn signal switch if condition still exists.
Hazard Switch Will Not Stay On Or Difficult To Turn Off	1. Loose switch, mounting screws. 2. Interference with other components. 3. Foreign material. 4. None of the above.	1. Tighten mounting screws to 2.8 N·m (25 in. lbs.). 2. Remove the interference. 3. Remove the foreign material. 4. Replace the switch.
No Turn Signal Lights	1. Faulty or blown fuse. 2. Inoperative turn signal flasher. 3. Loose chassis to column connector. 4. Disconnect column to chassis connector. Connect new switch to chassis and operate switch by hand. If vehicle lights now operate normally, signal switch is inoperative. 5. If vehicle lights do not operate, check chassis wiring for opens, grounds, etc.	1. Replace fuse and check operation. 2. Replace the turn signal flasher. 3. Connect securely, check operation. 4. Replace the signal switch. 5. Repair the chassis wiring.
Turn Indicator Lights On, But Not Flashing	1. Inoperative turn flasher. 2. Loose chassis to column connection. 3. Inoperative turn signal switch. 4. To determine if turn signal switch is faulty, substitute a new switch into the circuit and operate the switch by hand. If the vehicle's lights operate normally, the signal switch is inoperative. 5. If the vehicle's lights do not operate, check light sockets for high resistance connections, the chassis wiring for opens, grounds, etc.	1. Replace the turn flasher. 2. Connect securely and check operation. 3. Replace the turn signal switch. 4. Replace the signal switch. 5. Repair the chassis wiring.

DIAGNOSIS OF THE STEERING COLUMN (cont'd)

PROBLEM	POSSIBLE CAUSE	CORRECTION
Front Or Rear Turn Signal Lights Are Not Flashing	1. Burned out fuse. 2. Burned out or damaged turn signal bulb. 3. High resistance connection to ground at the bulb socket. 4. Loose chassis to column connector. 5. Disconnect column to the chassis connector. Connect a new switch into the system and operate the switch by hand. If turn signal lights are now on and flash, the turn signal switch is inoperative. 6. If vehicle lights do not operate, check the chassis wiring harness to light sockets for opens, grounds, etc.	1. Replace fuse and check operation. 2. Replace the bulb. 3. Remove or repair the faulty connection and check operation. 4. Connect securely and check operation. 5. Replace the turn signal switch. 6. Repair the chassis wiring.
Stop Light Not On When Turn Indicated	1. Burned out fuse. 2. Loose column to chassis connection. 3. Disconnect column to chassis connector. Connect new switch into system without removing old. Operate switch by hand. if brake lights work with switch in the turn position, signal switch is faulty. 4. If brake lights do not work, check connector to stop light, the sockets for grounds, opens, etc.	1. Replace fuse and check operation. 2. Connect securely and check operation. 3. Replace the signal switch. 4. Repair connector to stop lights circuits.
Turn Indicator Panel Lights Not Flashing	1. Burned out bulbs. 2. High resistance to ground at the bulb socket. 3. Opens, grounds in wiring harness from the front turn signal bulb socket to the indicator lights.	1. Replace the bulbs. 2. Replace the socket. 3. Locate and repair as required.
Turn Signal Lights Flash Very Slowly	1. Inoperative turn signal flasher. 2. System charging voltage low. 3. High resistance ground at light sockets. 4. Loose chassis to column connection. 5. Disconnect column to chassis connector. Connect new switch into system without removing old. Operate switch by hand. If flashing occurs at normal rate, the signal switch is faulty. 6. If the flashing rate is still extremely slow, check chassis wiring harness from the connector to the light sockets for high resistance.	1. Replace the turn signal flasher. 2. Increase voltage to specifications. Refer to ENGINE ELECTRICAL (SECTION 6D) in this manual. 3. Repair high resistance grounds at the light sockets. 4. Connect securely and check operation. 5. Replace signal switch. 6. Locate and repair as required. Refer to CHASSIS ELECTRICAL (SECTION 8D) in this manual.

DIAGNOSIS OF THE STEERING COLUMN (cont'd)

PROBLEM	POSSIBLE CAUSE	CORRECTION
Hazard Signal Lights Will Not Flash—Turn Signal Functions Normally	1. Blown fuse.	1. Replace fuse and check operation.
	2. Inoperative hazard warning flasher.	2. Replace the hazard warning flasher.
	3. Loose chassis to column connection.	3. Connect securely and check operation.
	4. Disconnect column to chassis connector. Connect new switch into system without removing old. Depress the hazard warning button and observe the hazard warning lights. If they now work normally, the turn signal switch is faulty.	4. Replace the turn signal switch.
	5. If the lights do not flash, check wiring harness "K" lead (brown) for open between hazard flasher and harmonica connector. If open, fuse block is faulty.	5. Replace fuse block. Refer to (CHASSIS ELECTRICAL) SECTION 8B in this manual.
Tone Alarm Does Not Sound With Key Fully Inserted In Lock Cylinder With Driver's Door Open	1. Loose connection at the tone alarm.	1. Connect securely.
	2. Voltage not available to the tone alarm.	2. Check the continuity of the chassis wiring and repair as required.
	3. Faulty tone alarm.	3. Replace the tone alarm.
	4. Door jamb switch on the driver's side is maladjusted or inoperative.	4. Adjust or replace as required.
	5. Short in the chassis wiring.	5. Check by separating chassis to column connector. Connect E and F female contacts on the chassis side (bent paper clip will work). If tone alarm sounds, continue diagnosis. If not, locate and repair chassis wiring.
	6. Short or fault in the signal switch wiring.	6. Connect male E and F contacts of connector with the jumper. Check buzzer switch pads with the ohmmeter. If contact is made, function is normal. If not, replace the signal switch.
	7. Chips, burrs, or foreign material are preventing actuator tip function. NOTICE: Key must be removed or the cylinder in the "run" position before removing the lock cylinder.	7. Remove chips and burrs. Reassemble and check.
	8. Faulty lock cylinder.	8. With the lock cylinder out fully insert and remove the key. The actuator should extend and retract smoothly. Total expansion of tip should be 1.25 mm (0.050 inch). If not, replace the lock cylinder.
	9. Chips, foreign material affecting the tone alarm switch operation.	9. Remove foreign material. Reassemble and check.
	10. Damaged or broken tone alarm switch.	10. Replace the tone alarm switch.

DIAGNOSIS OF THE STEERING COLUMN (cont'd)

PROBLEM	POSSIBLE CAUSE	CORRECTION
Tone Alarm Does Not Sound With Key Fully Inserted In Lock Cylinder With Driver's Door Open (Cont.)	1. Inoperative tone alarm switch (switch appears good but will not make the tone alarm switch function check). 2. Tone alarm switch contact gap is too large. 3. If the tone alarm fault has not yet been detected, connect a continuity meter (or light) to the male E and F connector contacts. Insert the key the full depth into the lock cylinder. If contact is made with the key in, and is not made with it out, the function is normal. Retrace the initial diagnostic steps. If contact is not established, the fault is in the column. 4. If the fault has not yet been isolated and repaired, connect ohmmeter to the tone alarm switch probes. Fully insert and remove the key from the lock cylinder. If contact is made with the key in, and is broken with it out, the function is normal. Retrace the diagnostic steps. If contact is not made, the fault is in the lock cylinder or tone alarm switch.	1. Connect the ohmmeter leads to the tone alarm switch probes. Press on the actuator pad until the interior points contact. If contact is not made, replace the tone alarm switch. 2. Reset the contact gap. 3. With the fault isolated in the column, disassemble the upper end of the column until the signal switch mounting screws have been removed. Lift the switch and check the probes of the tone alarm switch to ensure good contact with the pads in the signal switch. Bend the probes, if required, then reseat the signal switch and install the three screws. Check the function. 4. Setting the contact gap. Press a 0.75 mm (0.030 inch) wire type spark plug gap wire with flat piece of stock on the actuator pad. If contact is not made, adjust switch until positive contact is made (use ohmmeter). With positive contact at 0.75 mm (0.030 inch) use a 0.65 mm (0.025 inch) plug gap wire beneath the flat stock. No contact should occur. Adjust. When the switch will make contact with the 0.75 mm (0.030 inch) wire and not with the 0.65 mm (0.025 inch) wire, the tone alarm switch is set at the low limit.
Tone Alarm Continues To Operate With Key In The Lock Cylinder With The Driver's Door Either Opened Or Closed And Ceases When Key Is Removed	1. Door jamb switch on driver's side maladjusted or inoperative. 2. Wire from signal switch to door jamb switch shorted.	1. Adjust or replace as required. 2. If on signal switch side, replace signal switch. If on chassis side, find and repair.This condition indicates the lock cylinder or tone alarm switch is at fault. To verify, check for continuity at the E and F male connector contacts with the key removed from the cylinder. If continuity exists, the fault is in the column.
Tone Alarm Continues To Operate With Key Out, But Stops When Driver's Door Is Closed	1. Lock cylinder binding (turn lock toward start position. If tone alarm stops in the run position or when turned past run run towards the start, the problem is a sticky lock cylinder actuator). 2. Chips, foreign material in lock cylinder bore. 3. Sticky lock cylinder actuator tip. 4. Damaged or broken tone alarm switch. 5. Tone alarm switch contact gap is too small.	1. Replace the lock cylinder. 2. Remove, assemble and recheck function. 3. Replace the lock cylinder. 4. Replace the tone alarm switch. 5. Adjust as specified.

D0124

ON-VEHICLE SERVICE

INSPECTION

SHIFTER SHAFT

Separation of the shifter shaft sections will be internal and cannot be visually identified. Hold the lower end of the shifter shaft and move the shift lever on the column through its ranges and up and down. If there is little or no movement of the shifter shaft, the plastic joints are sheared.

STEERING SHAFT

If the steering shaft plastic pins have been sheared, the shaft will rattle when struck lightly from the side and some lash may be felt when rotating the steering wheel while holding the rag joint. If the steering shaft pins are sheared due to minor collision without serious damage to other components, the vehicle can be safely steered; however, steering shaft replacement is recommended.

COLUMN JACKET

Inspect the jacket section of the column for looseness, and/or bends.

COLUMN SUPPORT BRACKET

Damage in this area will be indicated by separation of the mounting capsules from the bracket. The bracket will have moved forward toward the entire compartment and will usually result in collapsing of the jacket section of the steering column.

STEERING COLUMN FOR ACCIDENT DAMAGE

Refer to:

- Column Shift:"Unit Repair - Column Shift" (Figure 17).
- Floor Shift:"Unit Repair - Floor Shift" (Figure 21).

STEERING WHEEL REPLACEMENT

Remove or Disconnect (Figures 1 and 2)

Tools Required:
J 1859-03 Steering Wheel Puller

1. Battery ground cable.
2. Horn button cap.
3. Retainer and steering wheel nut.
4. Horn lead assembly (some models).

- Mark the relationship of the steering wheel to the steering shaft.

5. Steering wheel. Use J 1859-03. Do not hammer on the puller, or damage could result to the steering column.

Install or Connect

- The turn signal control assembly must be in the neutral position when assembling the steering wheel.

1. *Steering wheel onto the steering shaft. Align the* marks made at removal.

Important

- Do not misalign the steering wheel more than 20 mm (0.79 inch) from the horizontal centerline.

2. Horn lead assembly (some models).

NOTICE: See "Notice" on page 3F1-1.

3. Steering wheel nut.

Tighten

- Nut to 40 N·m (30 ft. lbs.).

4. Retainer
5. Horn button cap.
6. Battery ground cable.

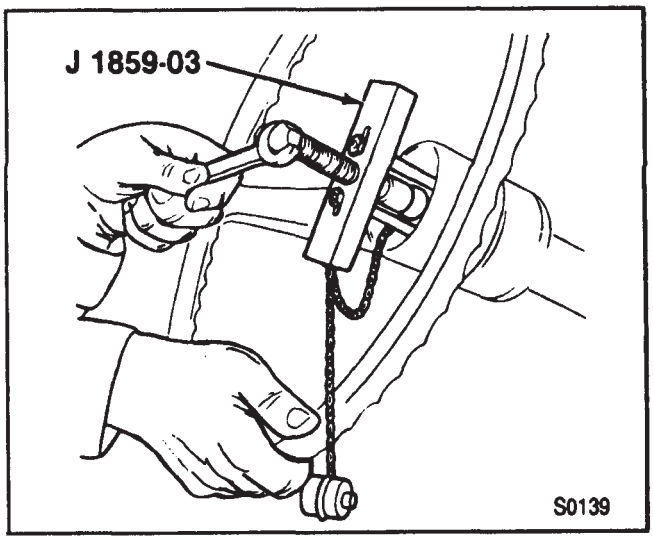

Figure 1—Steering Wheel Removal

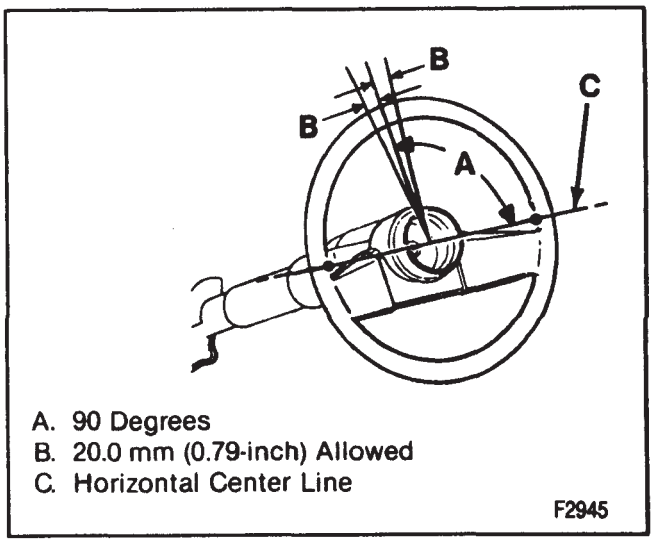

Figure 2—Steering Wheel Alignment

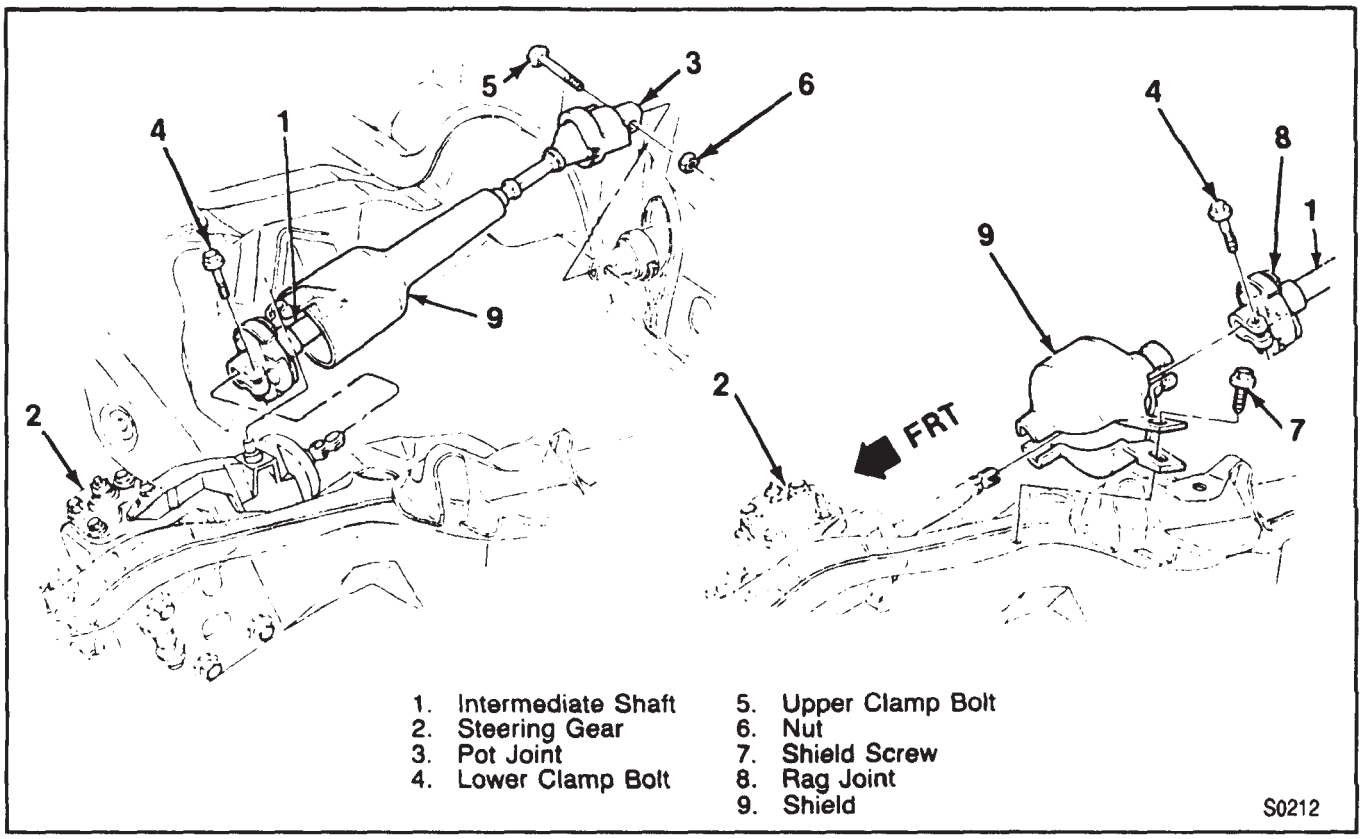

Figure 3—Intermediate Shaft Installation

INTERMEDIATE SHAFT REPLACEMENT

Remove or Disconnect (Figure 3)

- Set front wheels in the straight ahead position.
- Mark the pot joint to steering shaft and the rag joint to steering gear wormshaft relationship.

1. Shield screw (7) and shield (9).
2. Upper clamp bolt (5) and nut (6).
3. Lower clamp bolt (4).
4. Intermediate shaft (1).

Install or Connect (Figures 3 and 4)

NOTICE: For steps 2, 3, and 4 see "Notice" on page 3F1-1.

1. Intermediate shaft (1).
2. Upper clamp bolt (5) and nut (6).

Tighten

- Nut to 62 N·m (45 ft. lbs.).

3. Lower clamp bolt (4).

Tighten

- Bolt to 35 N·m (26 ft. lbs).

4. Shield (9) and shield screw (7).

Tighten

- Screw to 6 N·m (4 in. lbs.).

Measure

- Pot joint operating angle. The angle must not exceed 12.5 degrees maximum.

STEERING COLUMN REPLACEMENT

Remove or Disconnect (Figures 3 and 5)

1. Negative Battery cable.
2. Transmission control linkage from the column shift tube levers.
3. Upper clamp bolt (5) from the steering shaft. Mark the relationship of the pot joint to the steering shaft.
4. Support bracket bolts (32), nuts (30), and support bracket (28).
5. Steering column bolts (31) and seal (29).
6. Steering wheel. Refer to "Steering Wheel Replacement" in this section.
7. Steering column harness at the connectors.
   - Disconnect the neutral start switch and back-up lamp switch connectors (some models). Refer to CHASSIS ELECTRICAL (SECTION 8B) in this manual.
8. Steering column assembly (27).

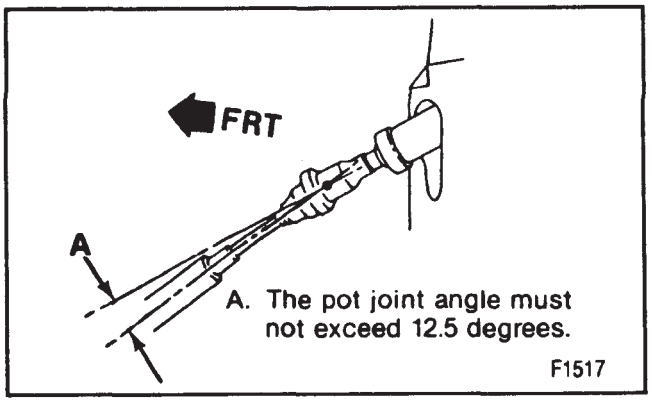

Figure 4—Pot Joint Angle

- *Rotate the column so the shift lever clears the* dash opening on column shift vehicles.

Install or Connect (Figures 3 and 5)

NOTICE: For steps 3 and 4 see "Notice" on page 3F1-1.

1. Lower the end of the steering column assembly (27) through the dash opening.
2. Support bracket (28), support bracket bolts (32), and nuts (30) loosely. Tighten screws and nuts finger tight.
   - Guide the steering shaft into the pot joint lining up the marks made at removal.
3. Upper clamp bolt (5). The bolt must pass through the shaft undercut.

Tighten

- Upper clamp bolt to 35 N·m (26 ft. lbs.).

Measure

- Pot joint operating angle must not exceed 12.5 degrees (figure 4).

4. Steering column bolts (31) through the cover and seal (29) to the dash panel.

Tighten

- Steering column bolts (31) to 14 N·m (10 ft. lbs.).
- Support bracket bolts (32) to 30 N·m (22 ft. lbs.).
- Nuts (30) to 27 N·m (20 ft. lbs.).

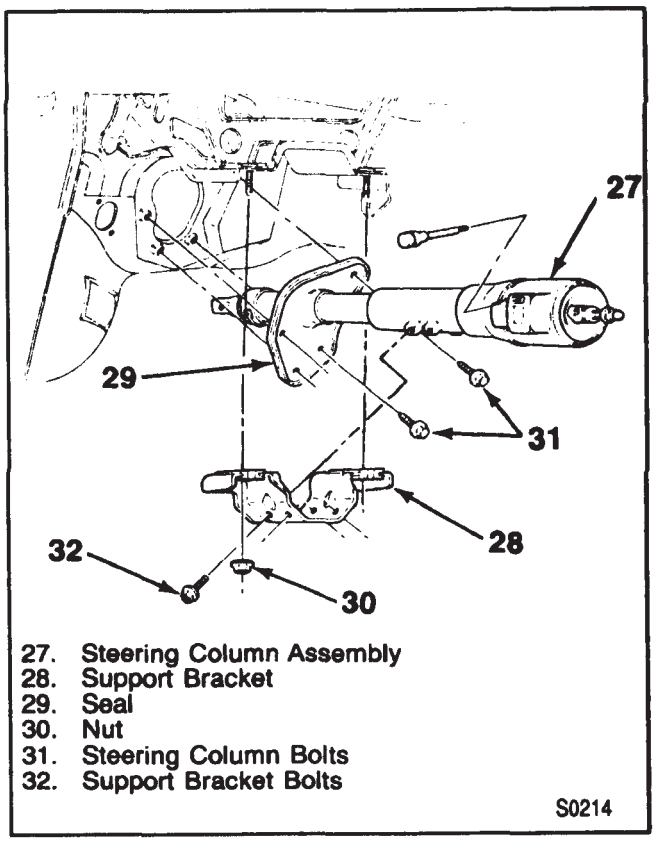

Figure 5—Steering Column Removal and Installation

5. Connectors to the steering column harness.
   - Connect the neutral start switch and back-up lamp switch connectors (some models). Refer to CHASSIS ELECTRICAL (SECTION 8D) in the manual.
6. Steering wheel. Refer to "Steering Wheel Replacement" in this section.
7. Transmission control linkage. (Column Shift vehicles only).
8. *Negative Battery cable.*

TURN SIGNAL LEVER REPLACEMENT

Refer to ACCESSORIES (SECTION 9B) in this manual.

UNIT REPAIR - COLUMN SHIFT

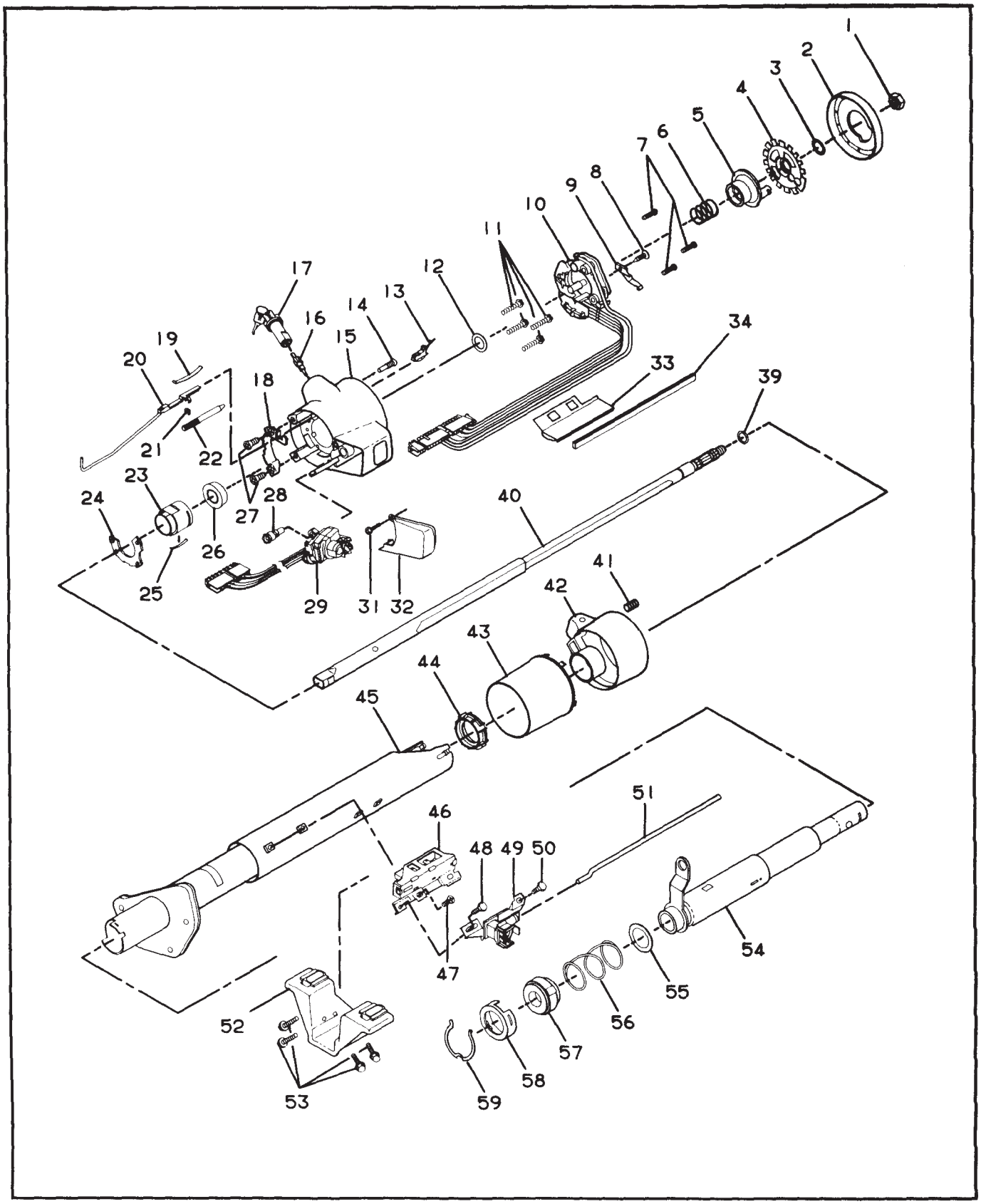

Figure 1 – Standard Steering Column

1-NUT, HEXAGON JAM (M14x1.5)
2-COVER, SHAFT LOCK
3-RING, RETAINING
4-LOCK, STEERING SHAFT
5-CAM ASM, TURN SIG CANCELLING
6-SPRING, UPPER BEARING
7-SCREW, BIND HD CROSS RECESS
8-SCREW, RD WASH HD (M4.2x1.41)
9-ARM, SWITCH ACTUATOR
10-SWITCH ASM, TURN SIGNAL
11-SCREW, HEX WASHER HD TAPPING
12-WASHER, THRUST
13-SWITCH ASM, BUZZER
14-SCREW, LOCK RETAINING
15-HOUSING ASM, STEERING COLUMN
16-SECTOR, SWITCH ACTUATOR
17-LOCK CYLINDER SET, STRG COLUMN
18-GATE, SHIFT LEVER
19-SPRING, RACK PRELOAD
20-ACTUATOR ASM, IGNITION SWITCH
21-WASHER, SPRING THRUST
22-BOLT ASSEMBLY, SPRING &
23-BUSHING, BEARING RETAINING
24-RETAINER, UPPER BEARING
25-CONTACT, HORN CIRCUIT
26-BEARING ASM
27-SCREW, FLT HD CROSS RECESS
28-PIN, SWITCH ACTUATOR PIVOT
29-SWITCH ASM, PIVOT & (PULSE)
31-SCREW, BINDING HD CROSS RECESS
32-COVER, HOUSING
33-PROTECTOR, WIRING
34-PROTECTOR, WIRING
39-RING, RETAINING
40-SHAFT ASM, STEERING
41-SPRING, SHIFT LEVER
42-BOWL ASM, GEARSHIFT LEVER
43-SHROUD, GEARSHIFT BOWL
44-BEARING, BOWL LOWER
45-JACKET ASM, STRG COL
46-SWITCH ASM, IGNITION
47-SCREW, FLT HD (#10-24 x .31)
48-SCREW, HEX WASHER HD TAPPING
49-SWITCH ASM, DIMMER
50-SCREW, WASHER HD (#10-24 x .25)
51-ROD, DIMMER SWITCH ACTUATOR
52-BRACKET ASM, STRG COL SUPT
53-BOLT, FLGD HEX HD (M8X1.25)
54-TUBE ASM, SHIFT
55-WASHER, SPRING THRUST
56-SPRING, SHIFT TUBE RETURN
57-BEARING ASM, ADAPTER &
58-RETAINER, BEARING
59-CLIP, LOWER BEARING ADAPTER

Service Kits

201-HSG ASM SERV SET, STRG COL
-INCLUDES: 16,17,23,24,26
202-RACK SERV ASM, SW ACTR ROD &
-INCLUDES: 20
203-SECTOR SERV KIT, IGN SW ACTR
-INCLUDES: 16
204-GREASE SERV KIT, (SYNTHETIC)

Figure 2 – Standard Steering Column – Legend

SUB SECTION A – UPPER COLUMN

Figures 1 through 5

INCLUDES:

STEERING SHAFT LOCK
TURN SIGNAL CANCELLING CAM ASM
UPPER BEARING SPRING
THRUST WASHER
BUZZER SWITCH ASSEMBLY
STRG COLUMN LOCK CYLINDER SET

Tools Required:
J 23653–C Lock Plate Compressor

Important

- Before doing any service procedures in this section, removal of Steering Wheel is needed.

Remove or Disconnect

1. Negative (–) battery cable.
2. Shaft lock cover (2).
3. Shaft lock retaining ring (3) using J 23653–C to push down steering shaft lock (4).
   - Dispose of ring (3).
4. Shaft lock (4) from steering shaft assembly (40).

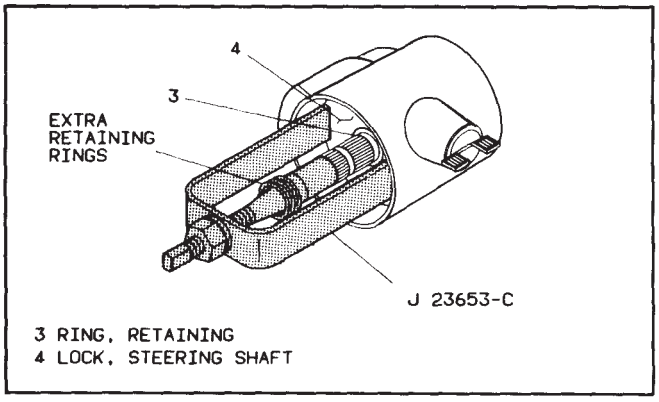

Figure 3 – Removing Shaft Lock Retaining Ring

5. Turn signal cancelling cam assembly (5).
6. Upper bearing spring (6).
7. Thrust washer (12).
8. Turn signal to "RIGHT TURN" position (up).
9. Multi–function lever and hazard knob assembly.
10. Washer head screw (8) and switch actuator arm (9).
11. Three cross recess screws (7).
12. Turn signal switch assembly (10).
    - Let switch hang freely.
13. Buzzer switch assembly (13).
14. Lock retaining screw (14).
15. Steering column lock cylinder set (17).

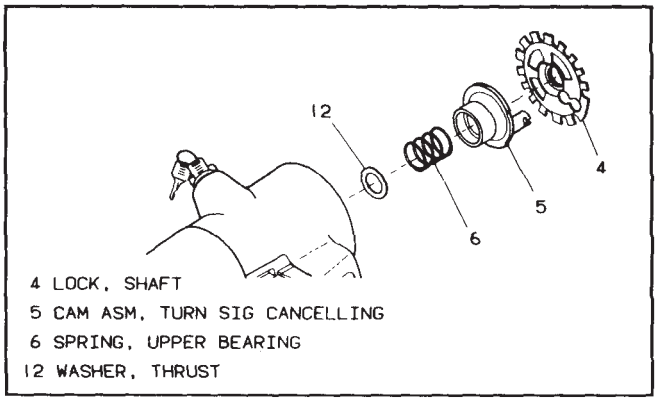

Figure 4 – Removing Components from Upper Shaft

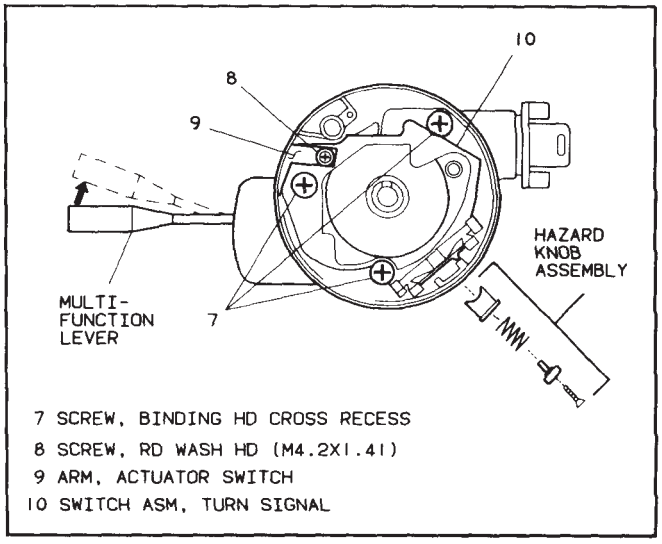

Figure 5 – Turn Signal Switch Removal Preparation

Install or Connect

NOTICE: See "Notice" on page 3F1 –1 of this section.

NOTICE: Ensure all fasteners are securely seated before applying needed torque. Failure to do may result in component damage or malfunctioning of steering column.

1. Steering column lock cylinder set (17).
2. Lock retaining screw (14).

Tighten

- Tighten screw (14) to 4.5 N·m (40 lb.in.)

3. Buzzer switch assembly (13).
4. Turn signal switch assembly (10) and three screws (7).

Tighten

- Tighten screws (7) to 3.4 N·m (30 lb.in.).

5. Switch actuator arm (9) and screw (8).

Tighten

- Tighten screw (8) to 2.3 N·m (20 lb.in.).

6. Hazard knob assembly and multi-function lever.
7. Thrust washer (12).
8. Upper bearing spring (6).
9. Turn signal cancelling cam assembly (5).
   - Lubricate with grease, synthetic (service kit).
10. Shaft lock (4).
11. New shaft lock retaining ring (3) using J 23653-C to push down shaft lock (4).
    - Ring (3) must be firmly seated in groove on shaft.
12. Shaft lock cover (2).

NOTICE: Gently pull lower turn signal wires to remove any wire kinks that may be inside steering column assembly. Failure to do so may cause damage to wire harness.

13. Wiring protector (33).
14. Steering column to vehicle.
15. Negative (-) battery cable.

SUB SECTION B - HOUSING COVER

INCLUDES:

- STEERING SHAFT ASSEMBLY
- TURN SIGNAL SWITCH ASSEMBLY
- STRG COL HOUSING ASSEMBLY
- PIVOT & (PULSE) SWITCH ASM
- SPRING & BOLT ASSEMBLY
- BEARING ASSEMBLY
- SWITCH ACTUATOR SECTOR
- IGNITION SWITCH ACTUATOR ASM
- DIMMER SWITCH ASSEMBLY
- IGNITION SWITCH ASSEMBLY
- IGNITION SWITCH ADJUSTMENT
- DIMMER SWITCH ADJUSTMENT

Tools Required:
J 23653-C Lock Plate Compressor

Important

- Before doing any service procedures in this section, removal of Steering Wheel is needed.

Remove or Disconnect
Figures 1, 6 thru 12, 17

1. Negative (-) battery cable.
2. Steering column from vehicle.

NOTICE: Once steering column is removed from vehicle, the column is extremely susceptible to damage. Dropping steering column assembly on its end could collapse steering shaft or loosen plastic injections which maintain column rigidity. Leaning on steering column assembly could cause jacket to bend or deform. Any of the above damage could impair steering column's collapsible design. If it is necessary to remove steering wheel, use only the specified steering wheel puller. Under no conditions should the end of shaft be hammered on as hammering could loosen plastic injections which maintain steering column rigidity.

Inspect

- Steering column for accident damage. (See Figure 17)

3. Do all steps, "Remove or Disconnect", Sub Section A.
4. Steering shaft assembly (40).
   - Retaining ring (39) from shaft (40).

Inspect

- Steering column shaft assembly (40) for accident damage. (See Figure 17)

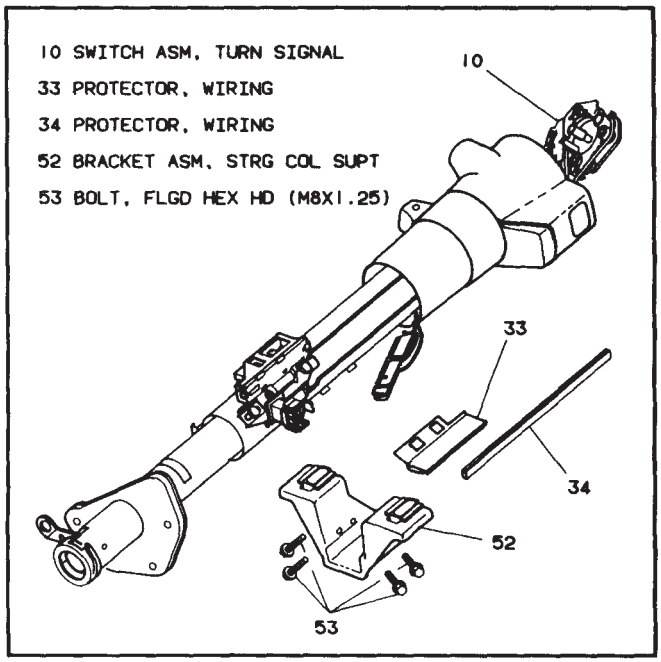

Figure 6 – Removing Turn Signal Switch

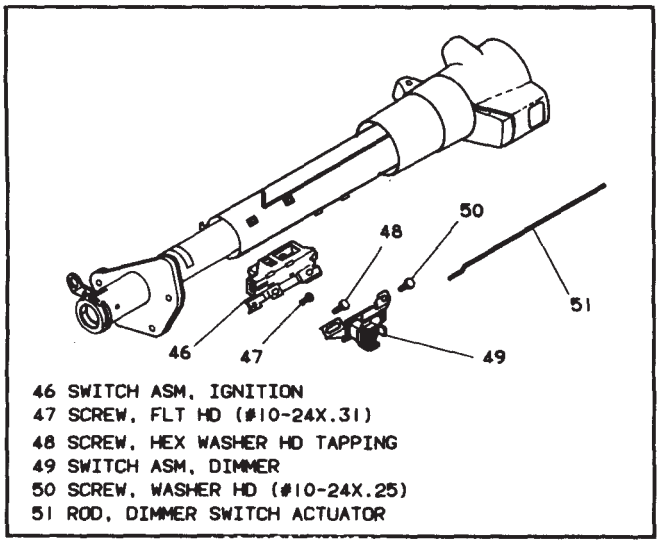

Figure 7 – Removing Dimmer & Ignition Switch Asm

5. Four hex bolts (53).
6. Steering column support bracket assembly (52).
7. Wiring protectors (33) and (34).
8. Turn signal switch assembly (10).
9. Washer head screw (50).
10. Hex washer head tapping screw (48).
11. Dimmer switch assembly (49).
12. Dimmer switch actuator rod (51).
13. Flat head screw (47).
14. Ignition switch assembly (46).
15. Four hex washer head tapping screws (11).

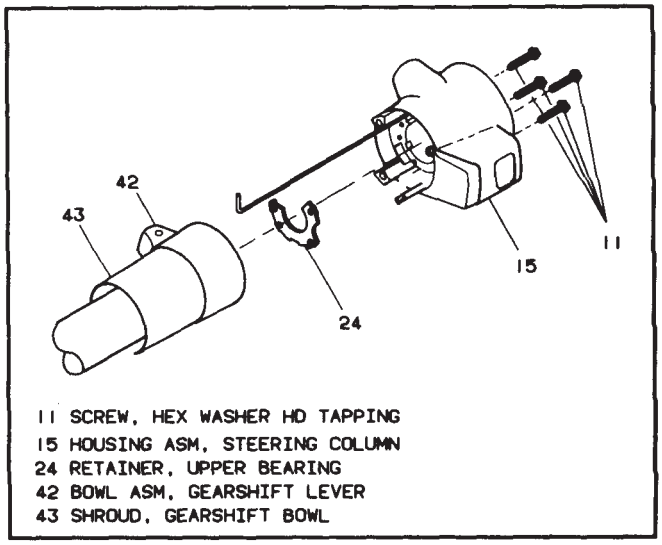

Figure 8 – Removing Steering Column Housing Assembly

16. Steering column housing assembly (15) from gearshift lever bowl assembly (42) and gearshift bowl shroud (43).
    - Upper bearing retainer (24).

Important

- Remove only those components necessary to do repairs.

Disassemble

Steering Column Housing Assembly

A) Two flat head cross recess screws (27).
B) Shift lever gate (18).

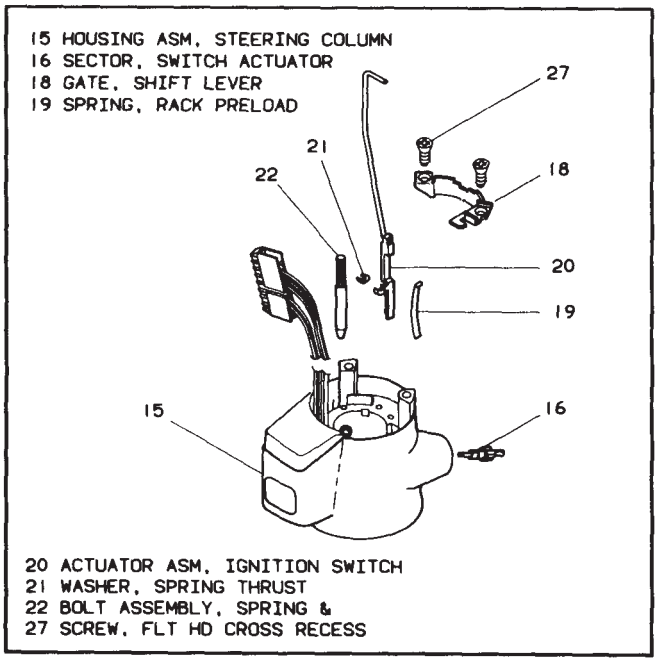

Figure 9 – Removing Switch Actuator Assembly With Spring & Bolt Assembly

C) Ignition switch actuator assembly (20) with spring & bolt assembly (22).
   - Spring & bolt assembly (22) from switch actuator rack (20).
   - Spring thrust washer (21) from spring & bolt assembly (22).

D) Switch actuator sector (16).
E) Rack preload spring (19).
F) Binding head cross recess screw (31).
G) Housing cover (32).
H) Switch actuator pivot pin (28).
   - Pivot & (pulse) switch assembly (29).

I) Bearing retaining bushing (23).
   - Horn circuit contact (25).

J) Bearing assembly (26).

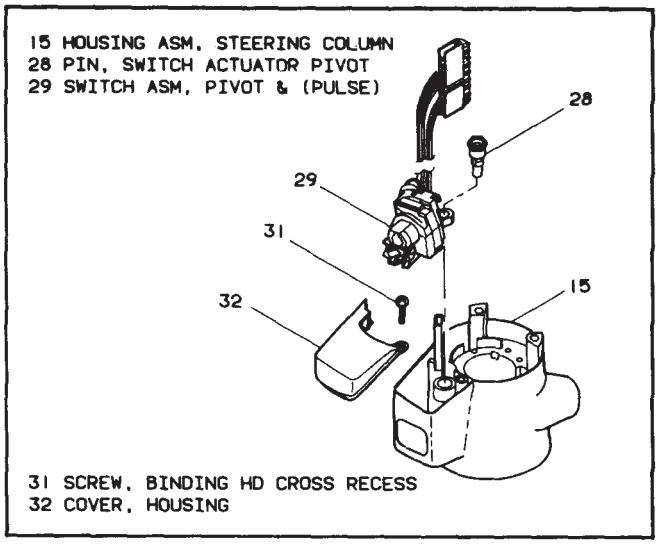

Figure 10 – Removing Pivot & (pulse) Switch Assembly

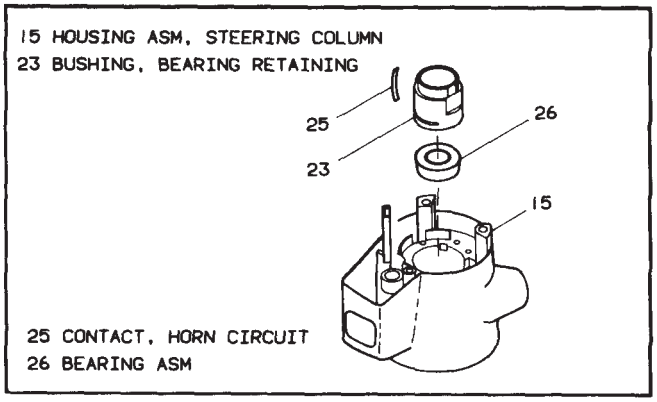

Figure 11 – Removing Bearing Retaining Bushing and Bearing Assembly

Assemble

Steering Column Housing Assembly

A) Bearing assembly (26).
B) Horn circuit contact (25) to retaining bushing (23).
C) Bearing retaining bushing (23).
D) Pivot & (pulse) switch assembly (29) with switch actuator pivot pin (28).

Tighten

- Tighten pin (28) to 3.1 N·m (27 lb.in.).

E) Housing cover (32).
F) Cross recess screw (31).

Tighten

- Tighten screw (31) to 1.9 N·m (17 lb.in.).

G) Rack preload spring (19).
H) Switch actuator sector (16).
I) Spring thrust washer (21) to spring & bolt assembly (22).
J) Spring & bolt assembly (22) to switch actuator rack (20).
K) Switch actuator rack (20) and bolt assembly (22) to housing assembly (15).
L) Shift lever gate (18).
M) Two cross recess screws (27).

Tighten

- Tighten screws (27) to 5.1 N·m (45 lb.in.).

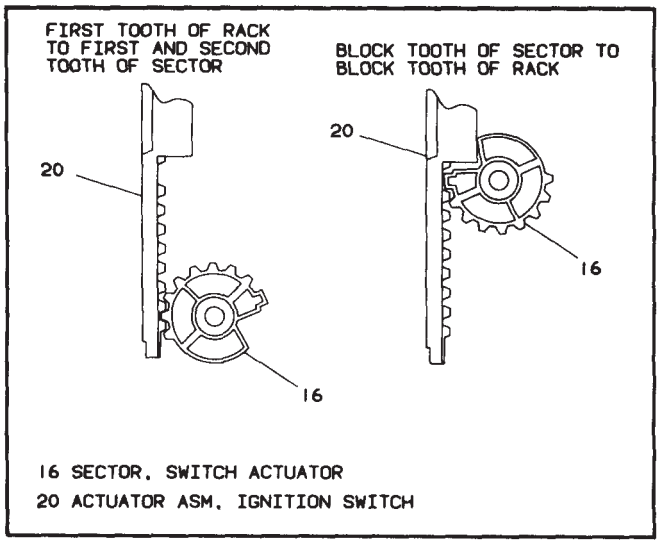

Figure 12 – Installing Switch Actuator Rack to Sector

Important

First tooth of actuator rack (20) must interact with first and second tooth of sector (16). With actuator rack (20) fully inserted, block tooth of sector (16) will rest in block tooth of rack (20).

Install or Connect

Figures 1,13 and 14

NOTICE: See "Notice" on page 3F1 –1 of this section.

NOTICE: Ensure all fasteners are securely seated before applying needed torque. Failure to do so may result in component damage or malfunctioning of steering column.

1. Retaining ring (39) to shaft assembly (40).
2. Shaft assembly (40) to jacket assembly (45).
   - Lubricate with lithium grease.
3. Turn signal switch (10) connector through column housing assembly (15).
4. Upper bearing retainer (24).
5. Lock housing cover assembly (15).
6. Cover screws (11).
   - Tighten screws (11) in a clockwise order finger tight.

Tighten

- Tighten screws (11) in same order to 5.3 N·m (47 lb.in.).

7. Wiring protectors (33) and (34).
8. Support bracket (52).
9. Hex head bolt (53).

Tighten

- Tighten bolt (53) to 30.0 N·m (22 lb.ft.).

NOTICE: Install ignition switch (46) to jacket (45) with switch in "OFF-LOCK" position. (See Figure 13) New ignition switch will be pinned in "OFF-LOCK" position. Remove plastic pin after switch is assembled to column. Failure to do so may cause switch damage.

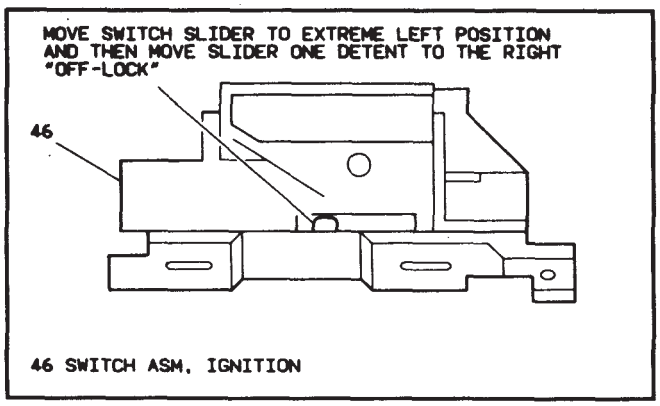

Figure 13 – Adjusting Ignition Switch

Adjust

- Ignition switch assembly (46). (See Figure 13)

  A) Move switch slider to extreme left position.
  B) Move switch slider one detent to right "OFF-LOCK" position.

10. Ignition switch assembly (46) and flat head screw (47).

Tighten

- Tighten screw (47) to 4.0 N·m (35 lb.in.).

11. Dimmer switch rod (51).
12. Dimmer switch assembly (49) to rod (51).
13. Washer head screw (50) and hex washer head screw (48).

- Tighten finger tight.

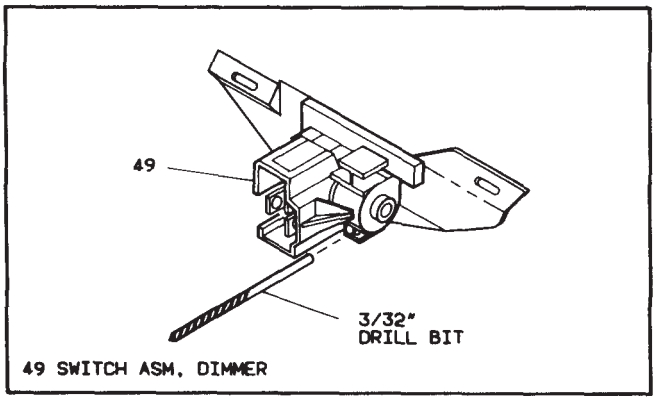

Figure 14 – Adjusting Dimmer Switch

Adjust

- Dimmer switch (49). (See Figure 14)

  A) Place a 3/32–inch drill bit in hole on switch to limit travel.
  B) Position switch on column and push against dimmer switch rod to remove all lash.
  C) Remove drill bit.

Tighten

- Tighten screw (48) and screw (50) to 4.0 N·m (35 lb.in.).

14. Do all steps, "Install or Connect", Sub Section A.
15. Column to vehicle instrument panel.
16. Negative (–) battery cable.

SUB SECTION C

Figures 1, 15 through 17

INCLUDES:
ADAPTER & BEARING ASSEMBLY
GEARSHIFT LEVER BOWL ASM
SHIFT TUBE ASSEMBLY
BOWL LOWER BEARING

Tools Required:
J 23653–A Lock Plate Compressor

Important

- Before doing any service procedures in this section, removal Steering Wheel is needed.

Remove or Disconnect

NOTICE: If vehicle has been in an accident, remove column from vehicle and inspect for damage. (See Figure 17)

1. Do steps 1 thru 12, "Remove or Disconnect", Sub Section B.

NOTICE: Once steering column is removed from vehicle, the column is extremely susceptible to damage. Dropping steering column assembly on its end could collapse steering shaft or loosen plastic injections which maintain column rigidity. Leaning on steering column assembly could cause jacket to bend or deform. Any of the above damage could impair steering column's collapsible design. If it is necessary to remove steering wheel, use only the specified steering wheel puller. Under no conditions should the end of shaft be hammered on as hammering could loosen plastic injections which maintain steering column rigidity.

2. Lower bearing adapter clip (59).
3. Bearing adapter retainer (58).
4. Adapter & bearing assembly (57).
5. Shift tube return spring (56).
6. Spring thrust washer (55).
7. Gearshift lever bowl assembly (42) and gearshift bowl shroud (43).
   - Shroud (43) from bowl (42).
   - Shift lever spring (41) from bowl (42).

8. Shift tube assembly (54).
9. Bowl lower bearing (44).

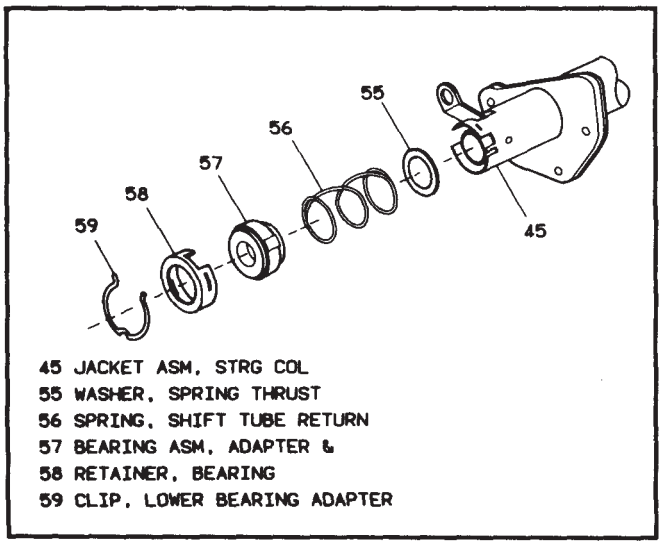

Figure 15 – Removing Lower Bearing Assembly

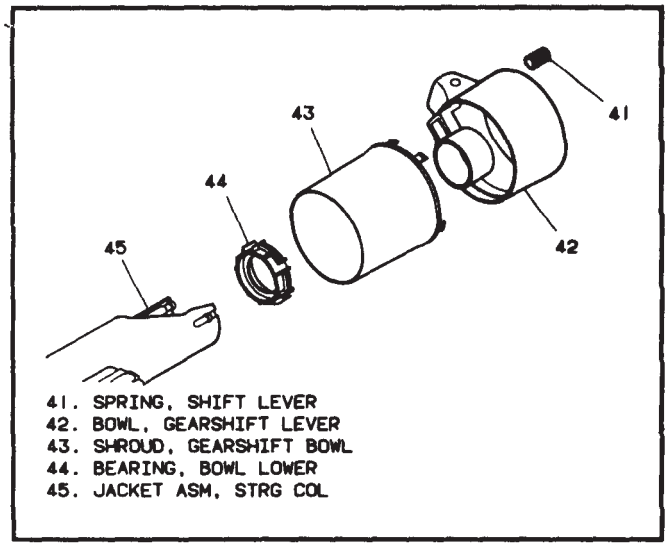

Figure 16 – Removing Lower Bowl Bearing

Install or Connect

NOTICE: Ensure all fasteners are securely seated before applying required torque. Failure to do so may result in component damage or malfunctioning of steering column.

1. Bowl lower bearing (44) to jacket assembly (45).
2. Shift tube assembly (54).
3. Shift lever spring (41) to bowl (42).
4. Gearshift lever bowl (42) and shroud (43) to jacket assembly (45).

5. Spring thrust washer (55).
6. Shift tube return spring (56).
7. Adapter & bearing assembly (57).
8. Bearing adapter retainer (58).
9. Bearing adapter clip (59).
10. Do all steps, "Install or Connect", Sub Section B.

CHECKING STEERING COLUMN FOR ACCIDENT DAMAGE

NOTICE: Vehicles involved in accidents resulting in frame damage, major body or sheet metal damage, or where the steering column has been impacted may also have a damaged or misaligned steering column.

CHECKING PROCEDURE

JACKET ASM, STEERING COLUMN

- Check capsules on steering column bracket assembly; all should be within 1.59mm from the bottom of the slots (View A). If not, bracket should be replaced if bracket is bolted to the jacket asm or the jacket asm should be replaced if bracket is welded to jacket asm.
- Check contact surface "A" on capsules (View B). The bolt head must not contact surface "A" or shear load would be increased. If contact is made, replace bracket asm or jacket asm.
- Check for jacket asm collapse by measuring the distance from the lower edge of upper jacket to a defined point on the lower jacket (View E). If measured dimensions are not within specifications, a new jacket must be installed.

SHIFT TUBE ASM

- Visually inspect shift tube for sheared injected plastic (View C). If shift tube shows sheared plastic, a new shift tube must be installed.
- Check operation of shift lever. If you can move lever to "Park" position without raising lever, it is an indication that upper shift tube plastic bearing is broken.

STEERING SHAFT ASM

- Visually inspect steering shaft for sheared injected plastic (View D). If steering shaft shows sheared plastic, a new steering shaft must be installed.
- Any frame damage that could cause a bent steering shaft must have steering shaft runout checked in the following manner: Using a dial indicator at lower end of steering shaft, have steering wheel rotated. Runout must not exceed 1.59mm.

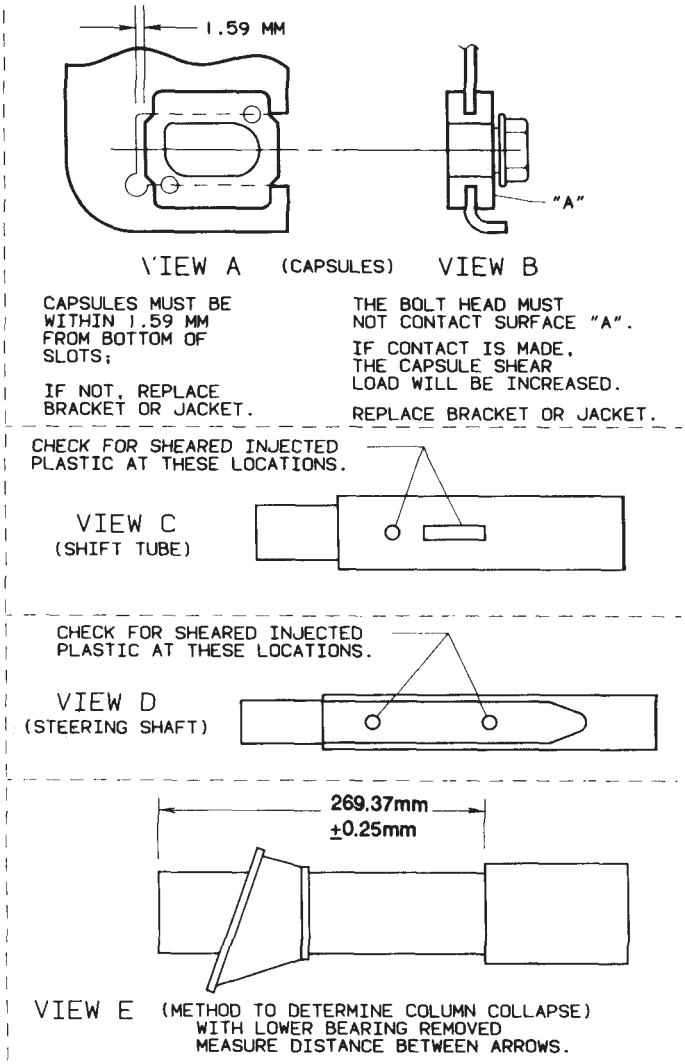

Figure 17 – Checking Steering Column for Accident Damage

BLANK

UNIT REPAIR - FLOOR SHIFT

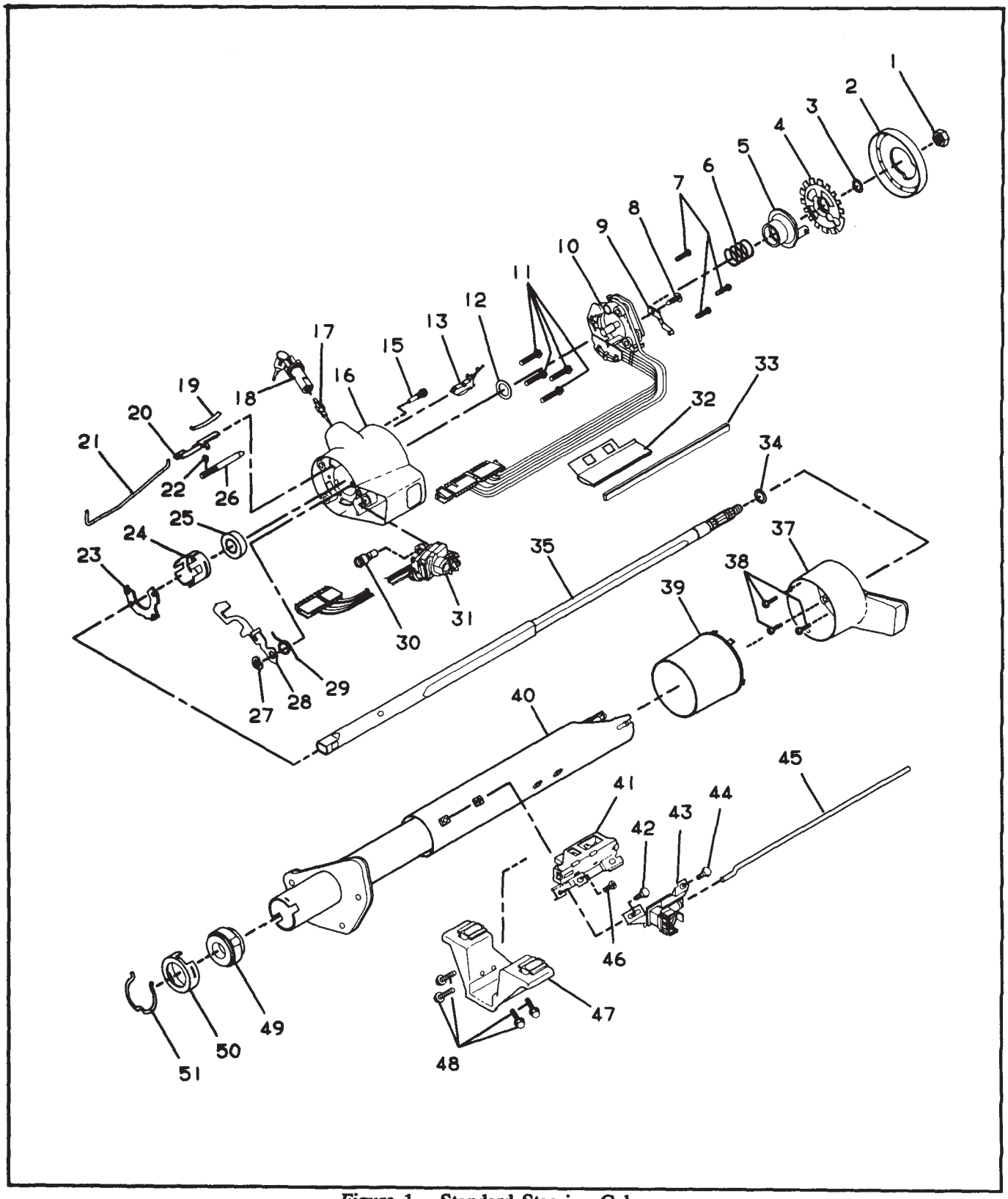

Figure 1 – Standard Steering Column

1-NUT, HEXAGON LOCKING (M14x1.5)
2-COVER, SHAFT LOCK
3-RING, RETAINING
4-LOCK, STEERING SHAFT
5-CAM ASM, TURN SIG CANCELLING
6-SPRING, UPPER BEARING
7-SCREW, BIND HD CROSS RECESS
8-SCREW, RD WASH HD (M4.2x1.41)
9-ARM, ACTUATOR SWITCH
10-SWITCH ASM, TURN SIGNAL
11-SCREW, HEX WASHER HD TAP
12-WASHER, THRUST
13-SWITCH ASM, BUZZER
15-SCREW, LOCK RETAINING
16-HOUSING ASM, STRG COL
17-SECTOR, SWITCH ACTUATOR
18-LOCK CYLINDER SET, STRG COL
19-SPRING, RACK PRELOAD
20-RACK, SWITCH ACTUATOR
21-ROD, SWITCH ACTUATOR
22-WASHER, SPRING THRUST
23-RETAINER, UPPER BEARING
24-BUSHING, BEARING RETAINING
25-BEARING ASM
26-BOLT ASM, SPRING &
27-WASHER, WAVE
28-LEVER, KEY RELEASE
29-SPRING, KEY RELEASE
30-PIN, SWITCH ACTUATOR PIVOT
31-SWITCH ASM, PIVOT & (PULSE)
32-PROTECTOR, WIRING
33-PROTECTOR, WIRING
34-RING, RETAINING
35-SHAFT ASM, STEERING
37-BOWL, FLOOR SHIFT LEVER
38-SCREW, BIND HD C/REC
39-SHROUD, GEARSHIFT BOWL
40-JACKET ASM, STRG COL
41-SWITCH ASM, IGNITION
42-SCREW, HEX WASHER HD TAPPING
43-SWITCH ASM, DIMMER
44-SCREW, WASH HD (#10-24 x .25)
45-ROD, DIMMER SWITCH ACTUATOR
46-SCREW, FLT HD (#10-24X.31)
47-BRACKET ASM, STRG COL SUPT
48-BOLT, FLGD HEX HD (M8X1.25)
49-BEARING ASM, ADAPTER &
50-RETAINER, BEARING
51-CLIP, LOWER BEARING ADAPTER

Service Kits

201-HSG ASM SERV SET, STRG COL
-INCLUDES: 16,17,23,24,25
202-GREASE SERV KIT, (SYNTHETIC)
203-RACK SERV ASM, SW AC ROD &
-INCLUDES: 20,21
204-ROD SERVICE KIT, DIMMER SWITCH
-INCLUDES 45
205-SECTOR SERV KIT, IGN SW ACTR
-INCLUDES 17

Figure 1 – Standard Steering Column – Legend

SUB SECTION A – UPPER COLUMN

Figures 1 through 7

INCLUDES:

- **SHAFT LOCK**
- **TURN SIGNAL CANCELLING CAM ASM**
- **UPPER BEARING SPRING**
- **THRUST WASHER**
- **BUZZER SWITCH ASSEMBLY**
- **STRG COLUMN LOCK CYLINDER SET**

Tools Required:
J 23653-C Lock Plate Compressor

Important

- Before doing any service procedures in this section, removal of Steering Wheel is needed.

Remove or Disconnect

1. Negative (–) battery cable.
2. Shaft lock cover (2).
3. Shaft lock retaining ring (3) using J 23653-C to push down shaft lock (4).
   - Dispose of ring (3).
4. Shaft lock (4).

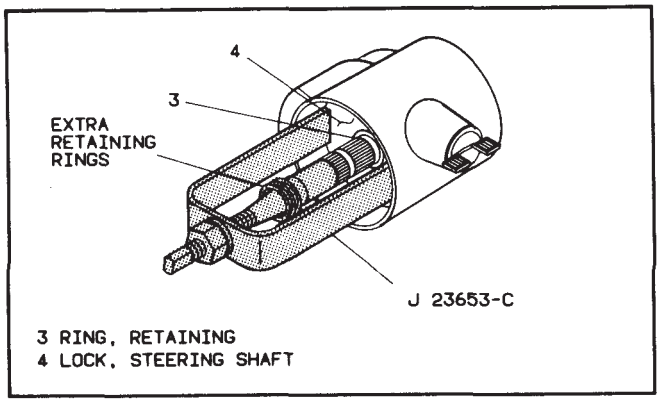

Figure 3 – Removing Shaft Lock Retaining Ring

5. Turn signal cancelling cam assembly (5).
6. Upper bearing spring (6).
7. Thrust washer (12).
8. Turn signal to "RIGHT TURN" position (up).
9. Multi-function lever and hazard knob assembly.
10. Screw (8) and signal switch arm (9).
11. Turn signal switch screws (7).

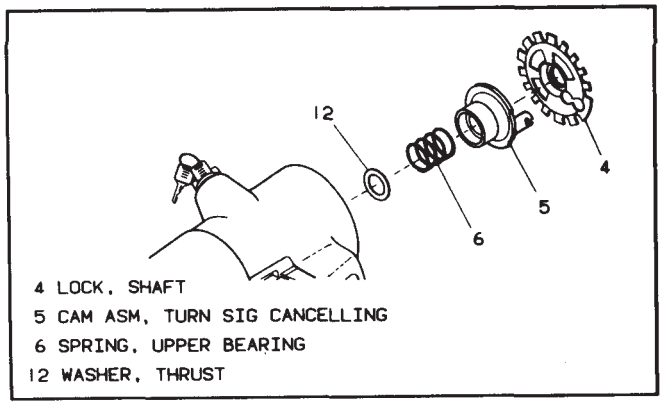

Figure 4 – Removing Components from Upper Shaft

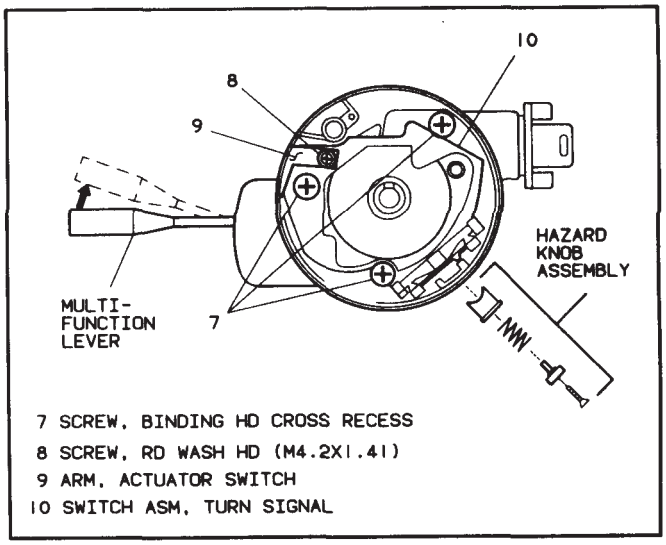

Figure 5 – Turn Signal Switch Removal Preparation

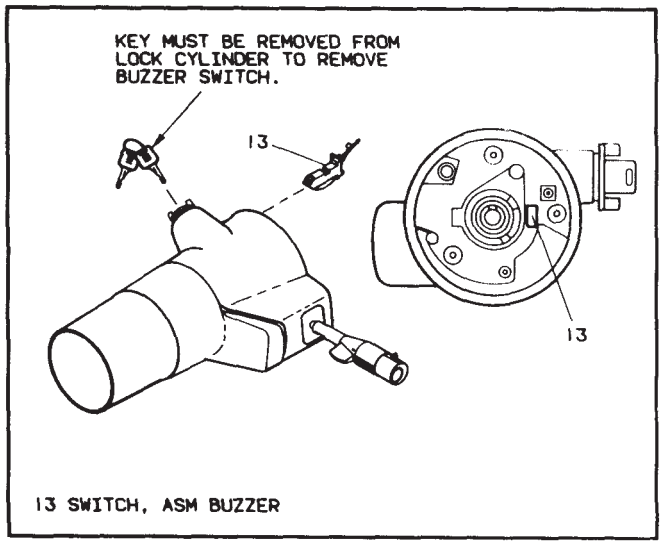

Figure 6 – Removing Buzzer Switch

12. Turn signal switch assembly (10).
    - Let switch hang freely.

13. Key from lock cylinder set (18).
14. Buzzer switch assembly (13).
15. Reinsert key in lock cylinder (18).
    - Key in "LOCK" position.

16. Lock retaining screw (15).
17. Lock cylinder set (18).

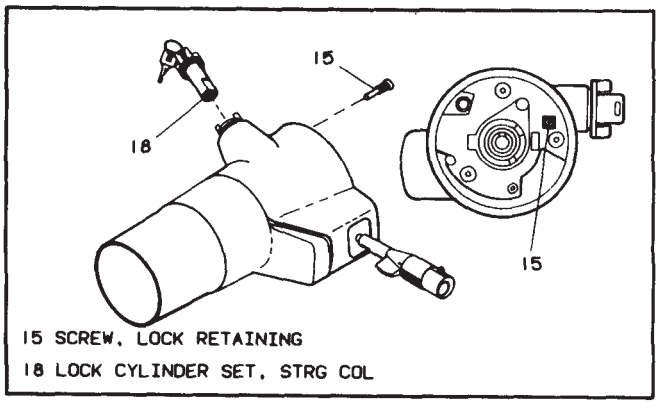

Figure 7 – Removing Lock Cylinder Set

Install or Connect

NOTICE: See "Notice" on page 3F1 -1 of this section.

NOTICE: Ensure all fasteners are securely seated before applying needed torque. Failure to do may result in component damage or malfunctioning of steering column.

1. Lock cylinder set (18).
2. Lock retaining screw (15).

Tighten

- Tighten screw (15) to 4.5 N·m (40 lb.in.).

3. Key from lock cylinder set (18).
4. Buzzer switch assembly (13).
5. Reinsert key in lock cylinder set (18).
    - Key in "LOCK" position.

6. Turn signal switch assembly (10) and screws (7).

Tighten

- Tighten screws (7) to 3.4 N·m (30 lb.in.).

7. Signal switch arm (9) and screw (8).

Tighten

- Tighten screw (8) to 2.3 N·m (20 lb.in.).

8. Hazard knob assembly and multi-function lever.

9. Thrust washer (12).
10. Upper bearing spring (6).
11. Turn signal cancelling cam assembly (5).
    - Lubricate with grease, synthetic (service kit).

12. Shaft lock (4).
13. New shaft lock retaining ring (3) using J 23653-C to push down shaft lock (4).
    - Ring (3) must be firmly seated in groove on shaft.

14. Shaft lock cover (2).

NOTICE: Gently pull lower turn signal wires to remove any wire kinks that may be inside steering column assembly. Failure to do so may cause damage to wire harness.

15. Steering column to vehicle.

16. Negative (–) battery cable.

SUB SECTION B – HOUSING COVER

INCLUDES:
STEERING SHAFT ASSEMBLY
TURN SIGNAL SWITCH ASSEMBLY
STRG COL HOUSING ASSEMBLY
SWITCH ACTUATOR PIVOT ASSEMBLY
SPRING & BOLT ASSEMBLY
BEARING ASSEMBLY
SWITCH ACTUATOR SECTOR
IGNITION SWITCH ACTUATOR ASM

Tools Required:
J 23653–C Lock Plate Compressor

Important

- Before doing any service procedures in this section, removal of Steering Wheel is needed.

Remove or Disconnect
Figures 1 through 17 and 21

1. Negative (–) battery cable.
2. Steering column from vehicle.

NOTICE: Once steering column is removed from vehicle, the column is extremely susceptible to damage. Dropping steering column assembly on its end could collapse steering shaft or loosen plastic injections which maintain column rigidity. Leaning on steering column assembly could cause jacket to bend or deform. Any of the above damage could impair steering column's collapsible design. If it is necessary to remove steering wheel, use only the specified steering wheel puller. Under no conditions should the end of shaft be hammered on as hammering could loosen plastic injections which maintain steering column rigidity.

Inspect

- Steering column for accident damage. (See Figure 21)

3. Do all steps, "Remove or Disconnect", Sub Section A.
4. Steering shaft assembly (35).
   - Retaining ring (34) from shaft (35).

Inspect

- Steering column shaft assembly (35) for accident damage. (See Figure 21)

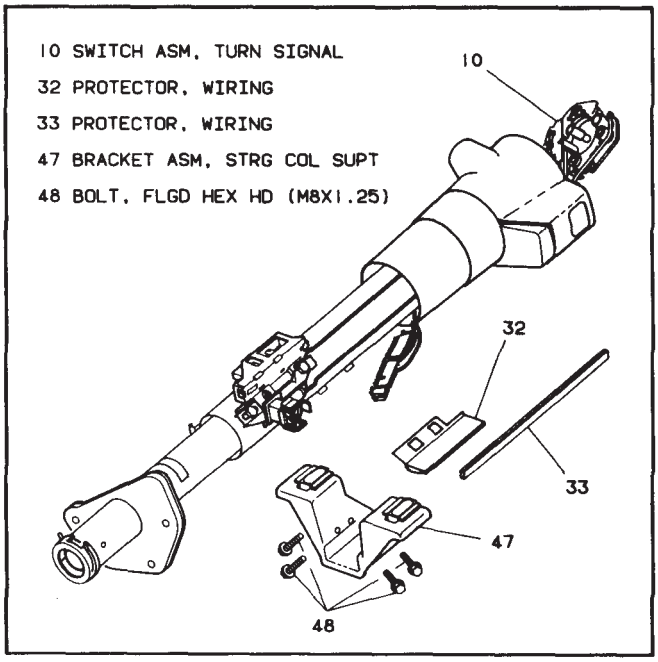

Figure 8 – Removing Turn Signal Switch

5. Four support bolts (48).
6. Steering column support bracket assembly (47).
7. Wiring protectors (32) and (33).
8. Turn signal switch assembly (10).
9. Washer head screw (44).
10. Washer head tapping screw (42).

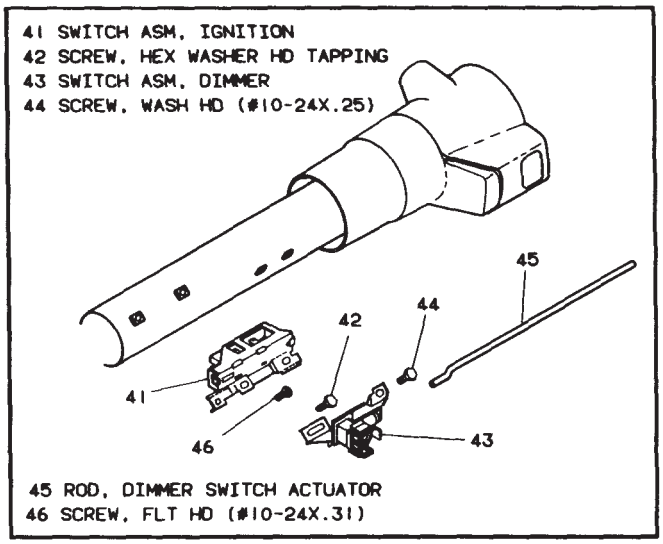

Figure 9 – Removing Dimmer & Ignition Switch Assemblies

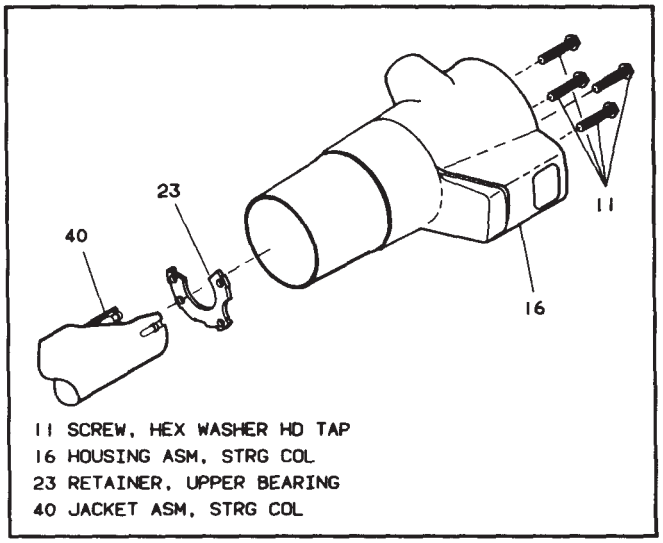

Figure 10 – Removing Lock Housing Cover Assembly

11. Dimmer switch (43).
12. Dimmer switch rod (45).
13. Flat head screw (46).
14. Ignition switch assembly (41).
15. Washer head tapping screw (11).
16. Lock housing cover assembly (16) with floor shift lever bowl (37) and gearshift bowl shroud (39).
    - Pull housing cover from jacket (40) and remove upper bearing retainer (23).

17. Three cross recess screws (38).
18. Floor shift lever bowl (37) with gearshift bowl shroud (39).
    - Shroud (39) from bowl (37).

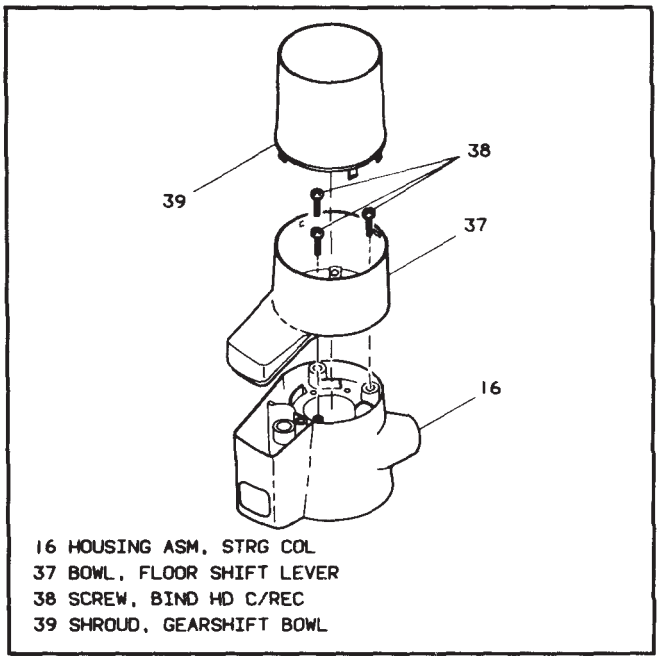

Figure 11 – Removing Shift Lever Bowl With Shroud

Important

- Remove only those components necessary to do repairs.

Disassemble

Steering Column Housing Assembly

NOTICE: Key release lever (28) is under spring tension. Care must be taken not to lose key release spring (29) or wave washer (27).

A) Wave washer (27).
B) Key release lever (28).
C) Key release spring (29).
D) Switch actuator rack (20) with spring & bolt assembly (26).
   - Spring & bolt assembly (26) from switch actuator rack (20).
   - Switch actuator rod (21) from rack (20).
   - Spring thrust washer (22) from spring & bolt assembly (26).

E) Switch actuator sector (17).

F) Rack preload spring (19).
G) Switch actuator pivot pin (30).
   - *Switch actuator pivot assembly (31).*

H) Bearing retaining bushing (24) using a punch.
I) Bearing assembly (25) using a punch.

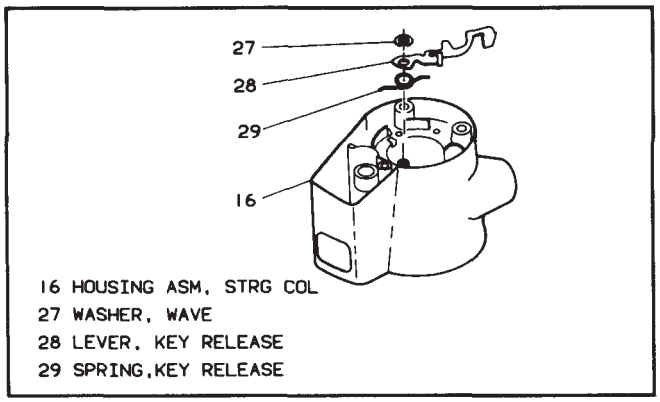

Figure 12 – Removing Key Release Lever Assembly

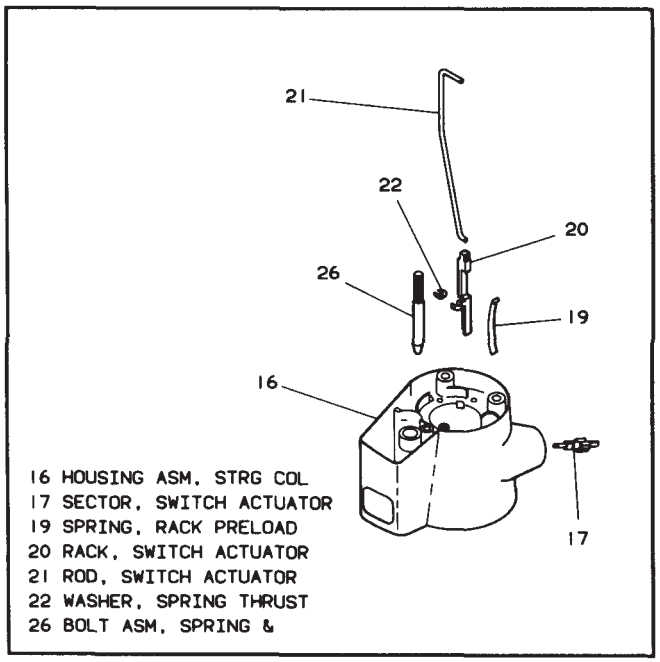

Figure 13 – Removing Switch Actuator Rack With Spring & Bolt Assembly

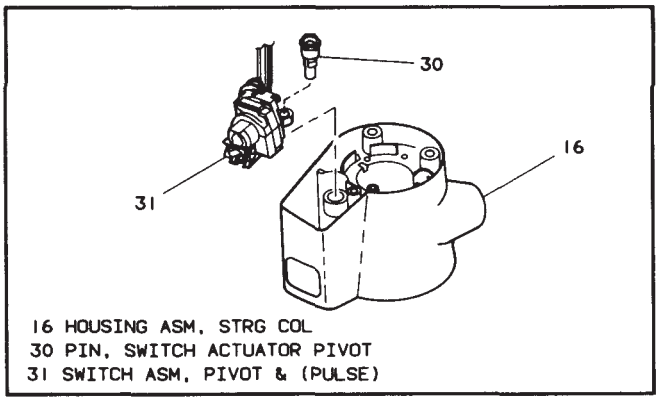

Figure 14 – Removing Switch Actuator Pivot Assembly

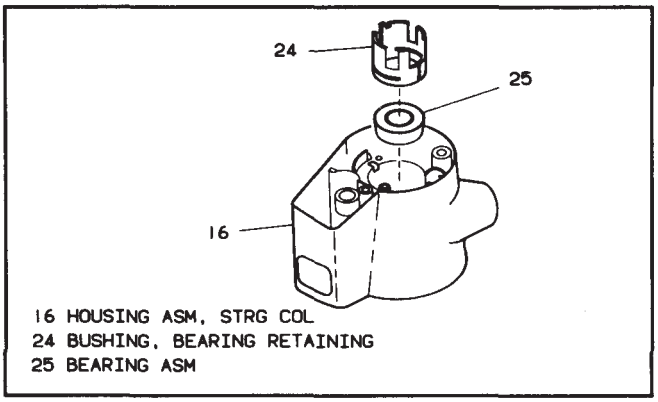

Figure 15 – Removing Bearing Retaining Bushing and Bearing Assembly

Assemble

Steering Column Housing Assembly

NOTICE: Use bearing retaining bushing (24) to aid in *seating bearing assembly into housing assembly (16). Tab* on bushing (24) must be fully seated into slot in housing assembly (16).

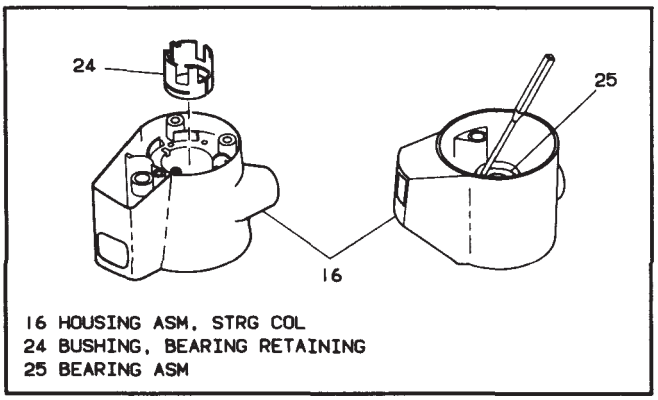

Figure 16 – Installing Bearing Assembly and Bearing Retaining Bushing

A) Bearing assembly (25).
B) Bearing retaining bushing (24).
C) Switch actuator pivot assembly (30) with switch actuator pivot pin (29).

Tighten

- Tighten pin (29) to 3.1 N·m (27 lb.in.).

D) Rack preload spring (19).
E) Switch actuator sector (17).

Assemble

- Spring thrust washer (22) to spring & bolt assembly (26).

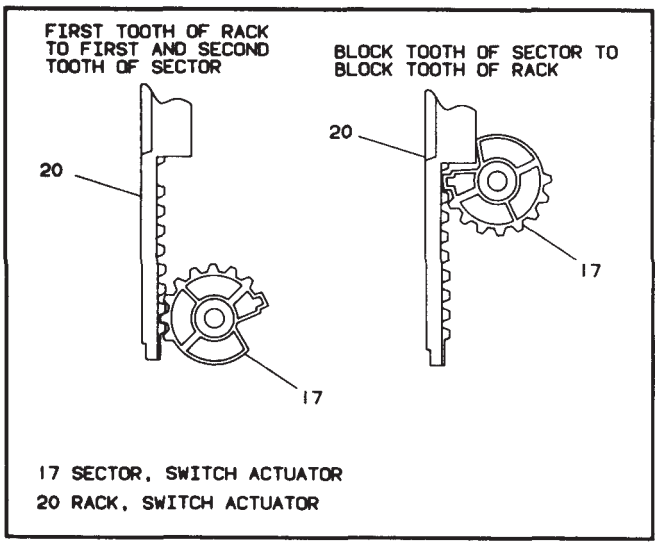

Figure 17 – Installing Switch Actuator Rack to Sector

- Switch actuator rod (21) to switch actuator rack (20).
- Spring & bolt assembly (26) to switch actuator rack (20).

F) Spring & bolt assembly (26) with switch actuator rack (20) to housing assembly (16).

NOTICE: First tooth of rack (20) must interact with first and second tooth of sector (17). With rack (20) fully inserted, block tooth of sector (17) will rest in block tooth of rack (20).

G) Key release spring (29).
H) Key release lever (28).
I) Wave washer (27).

Install or Connect
Figures 1, 18 and 19

NOTICE: See "Notice" on page 3F1 –1 of this section.

NOTICE: Ensure all fasteners are securely seated before applying needed torque. Failure to do so may result in component damage or malfunctioning of steering column.

1. Retaining ring (34) to shaft assembly (35).
2. Shaft assembly (35) to jacket assembly (40).
   - Lubricate with lithium grease.
3. Gearshift bowl shroud (39) to floor shift lever bowl (37).
4. Bowl (37) with shroud (39) to steering column housing assembly (16).
5. Three cross recess screws (38).

Tighten

- Tighten screws (38) to 1.9 N·m (17 lb.in.).

6. Turn signal switch (10) connector through column housing assembly (16).
7. Upper bearing retainer (23).
8. Lock housing cover assembly (16) with bowl (37) and shroud (39) to jacket assembly (40).
9. Cover screws (11).
   - Tighten screws (11) in a clockwise order finger tight.

Tighten

- Tighten screws (11) in same order to 5.3 N·m (47 lb.in.).

10. Wiring protectors (32) and (33).
11. Support bracket (47).
12. Four support bolts (48).

Tighten

- Tighten bolts (48) to 30.0 N·m (22 lb.ft.).

NOTICE: Install ignition switch (41) to jacket (40) with switch in "OFF-LOCK" position. (See figure 18) New ignition switch will be pinned in "OFF-LOCK" position. Remove plastic pin after switch is assembled to column. Failure to do so may cause switch damage.

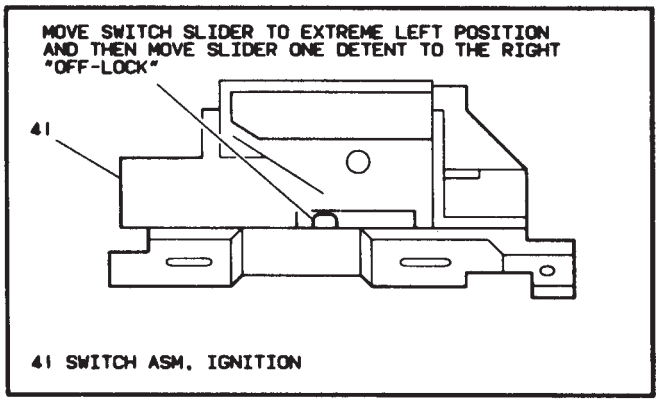

Figure 18 – Adjusting Ignition Switch

Adjust

- Ignition switch assembly (43). (See figure 18)

  A) Move switch slider to extreme left position.
  B) Move switch slider one detent to right "OFF-LOCK" position.

13. Ignition switch assembly (41) and flat head screw (46).

Tighten

- Tighten screw (46) to 4.0 N·m (35 lb.in.).

14. Dimmer switch rod (45).
15. Dimmer switch assembly (43) to rod (45).
16. Washer head screw (44) and washer head tapping screw (42).
    - Tighten finger tight.

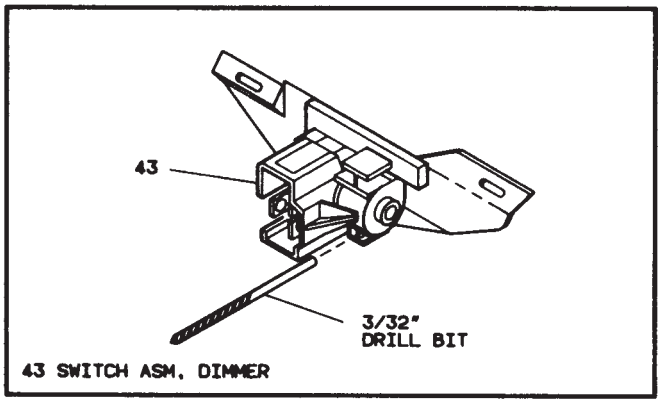

Figure 19 – Adjusting Dimmer Switch

Adjust

- Dimmer switch (43). (See Figure 19)

  A) Place a 3/32-inch drill bit in hole on switch to limit travel.
  B) Position switch on column and push against dimmer switch rod (45) to remove all lash.
  C) Remove drill bit.

Tighten

- Tighten screw (44) and screw (42) to 4.0 N·m (35 lb.in.).

17. Wiring protectors (32) and (33).
18. Steering column support bracket assembly (47).
19. Four bolts (48).

Tighten

- Tighten bolts (48) to 30.0 N·m (22 lb.ft.).

20. Do all steps, "Install or Connect", Sub Section A.

SUB SECTION C – LOWER COLUMN

INCLUDES:

DIMMER SWITCH ASSEMBLY
DIMMER SWITCH ADJUSTMENT
IGNITION & DIMMER SWITCH ASM
IGNITION SWITCH ADJUSTMENT
ADAPTER & BEARING ASSEMBLY

Dimmer Switch Assembly

Remove or Disconnect
Figures 1 and 9

1. Negative (–) battery cable.
2. Washer head screw (44).
3. Washer head tapping screw (42).
4. Dimmer switch assembly (43) from rod (45).
5. Vehicle wire harness from dimmer switch (43).

Install or Connect
Figures 1,9 and 19

NOTICE: See "Notice" on page 3F1 -1 of this section.

NOTICE: Ensure all fasteners are securely seated before applying required torque. Failure to do so may result in component damage or malfunctioning of steering column.

1. Dimmer switch assembly (43) to rod (45).
2. Washer head screw (44) and washer head tapping screw (42).
   - Tighten finger tight.

Adjust

- Dimmer switch (43). (See figure 19)

  A) Place 3/32-inch drill bit in hole on switch to limit travel.
  B) Position switch on column and push against dimmer switch rod (45) to remove all lash.
  C) Remove drill bit.

Tighten

- Tighten screw (44) and screw (42) to 4.0 N·m (35 lb.in.).

3. Vehicle wire harness to dimmer switch (43).
4. Negative (–) battery cable.

Ignition Switch Assembly

Remove or Disconnect
Figures 1 and 9

1. Negative (–) battery cable.
2. Washer head screw (44).
3. Washer head tapping screw (42).
4. Dimmer switch assembly (43) from rod (45).
5. Flat head screw (46).
6. Ignition switch assembly (41) from ignition switch actuator rod (21).
7. Vehicle wire harness from ignition switch (41).

Install or Connect
Figures 1,9,18 and 19

NOTICE: See "Notice" on page 3F1 -1 of this section.

NOTICE: Ensure all fasteners are securely seated before applying needed torque. Failure to do so may result in component damage or malfunctioning of steering column.

NOTICE: Install ignition switch (41) to jacket (40) with switch in "OFF-LOCK" position. (See Figure 18) New ignition switch will be pinned in "OFF-LOCK" position. Remove plastic pin after switch is assembled to column. Failure to do so may cause switch damage.

1. Ignition switch assembly (41) to ignition switch actuator rod (21).

Adjust

- Ignition switch assembly (41). (See Figure 18)

  A) Move switch slider to extreme left position.
  B) Move switch slider one detent to right "OFF-LOCK" position.

2. Ignition switch assembly (41) and flat head screw (46).

Tighten

- Tighten screw (46) to 4.0 N·m (35 lb.in.).

3. Dimmer switch assembly (43) to rod (45).
4. Washer head screw (44) and washer head tapping screw (42).
   - Tighten finger tight.

Adjust

- Dimmer switch (43). (See Figure 19)

  A) Place 3/32-inch drill bit in hole on switch to limit travel.
  B) Position switch on column and push against dimmer switch rod (45) to remove all lash.
  C) Remove drill bit.

Tighten

- Tighten screw (44) and screw (42) to 4.0 N·m (35 lb.in.).

5. Vehicle wire harness to ignition switch (41).
6. Negative (–) battery cable.

Adapter & Bearing Assembly

Remove or Disconnect
Figures 1,20 and 21

1. Negative (–) battery cable.
2. Steering column from vehicle.

NOTICE: Once steering column is removed from vehicle, the column is extremely susceptible to damage. Dropping steering column assembly on its end could collapse steering shaft or loosen plastic injections which maintain column rigidity. Leaning on steering column assembly could cause jacket to bend or deform. Any of the above damage could impair steering column's collapsible design. If it is necessary to remove steering wheel, use only the specified steering wheel puller. Under no conditions should the end of shaft be hammered on as hammering could loosen plastic injections which maintain steering column rigidity.

Inspect

- Steering column for accident damage. (See Figure 21)

3. Lower bearing adapter clip (51).
4. Bearing retainer (50).
5. Adapter & bearing assembly (49).

Install or Connect
Figures 1 and 20

NOTICE: See "Notice" on page 3F1- -1 of this section.

NOTICE: Ensure all fasteners are securely seated before applying needed torque. Failure to do so may result in component damage or malfunctioning of steering column.

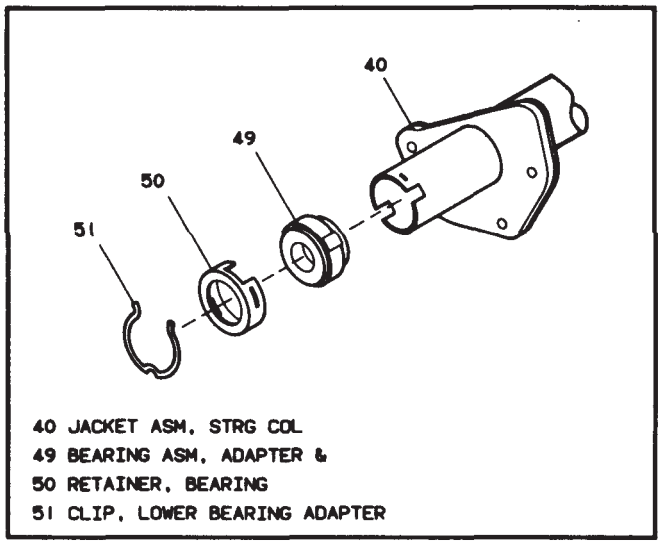

Figure 20 – Installing Adapter & Bearing Assembly

1. Adapter & bearing assembly (51).
   - Lubricate outer surface with lithium grease.
2. Bearing retainer (50).
3. Lower bearing adapter clip (51).
4. Steering column to vehicle.
5. Negative (–) battery cable.

CHECKING STEERING COLUMN FOR ACCIDENT DAMAGE

NOTICE: Vehicles involved in accidents resulting in frame damage, major body or sheet metal damage, or where the steering column has been impacted may also have a damaged or misaligned steering column.

CHECKING PROCEDURE

JACKET ASM, STEERING COLUMN

- Check capsules on steering column bracket assembly; all should be within 1.59mm from the bottom of the slots (View A). If not, bracket should be replaced if bracket is bolted to the jacket asm or the jacket asm should be replaed if bracket is welded to jacket asm.
- Check contact surface "A" on capsules (View B). The bolt head must no contact surface "A" or shear load would be increased. If contact is made, replace bracket asm or jacket asm.
- Check for jacket asm collapse by measuring the distance from the lower edge of upper jacket to a defined point on the lower jacket (View D). If measured dimensions are not within specifications, a new jacket must be installed.

STEERING SHAFT ASM

- Visually inspect steering shaft for sheared injected plastic (View C). If steering shaft shows sheared plastic, a new steering shaft must be installed.
- Any frame damage that could cause a bent steering shaft must have steering shaft runout checked in the following manner: Using a dial indicator at lower end of steering shaft, have steering wheel rotated. Runout must not exceed 1.59mm.

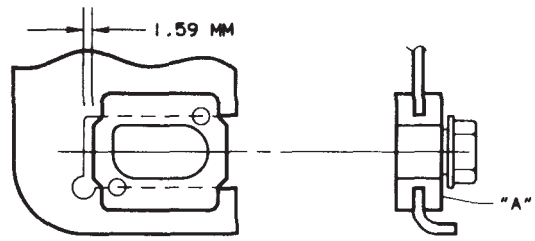

VIEW A (CAPSULES) VIEW B

CAPSULES MUST BE WITHIN 1.59 MM FROM BOTTOM OF SLOTS;

IF NOT, REPLACE BRACKET OR JACKET.

THE BOLT HEAD MUST NOT CONTACT SURFACE "A".

IF CONTACT IS MADE, THE CAPSULE SHEAR LOAD WILL BE INCREASED.

REPLACE BRACKET OR JACKET.

CHECK FOR SHEARED INJECTED PLASTIC AT THESE LOCATIONS.

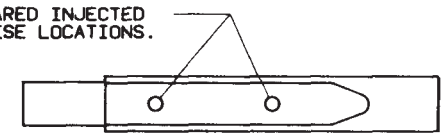

VIEW C
(STEERING SHAFT)

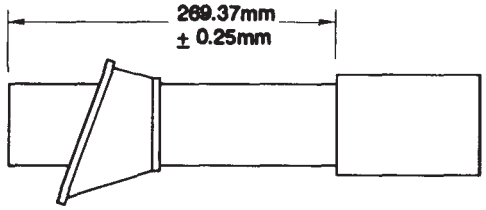

VIEW D (METHOD TO DETERMINE COLUMN COLLAPSE)
WITH LOWER BEARING REMOVED
MEASURE DISTANCE BETWEEN ARROWS.

Figure 21 – Checking Steering Column for Accident Damage

SPECIFICATIONS

FASTENER TIGHTENING SPECIFICATIONS

	N·m	Ft. Lbs.	In. Lbs.
Steering Wheel-to-Shaft Nut	41.0	30	—
Turn Signal Switch Connecting Screws	3.4	—	30
Turn Signal Switch Actuator Assembly Screw	2.3	—	20
Lock Housing Cover Screws	5.3	—	47
Lock Cylinder Set Retaining Screws	4.5	—	40
Lock Retaining Screw	4.5	—	40
Shift Lever Gate to Column Housing Screws	5.1	—	45
Switch Actuator Pivot Pin	3.1	—	27
Housing Cover to Column Housing Screw	1.9	—	17
Floor Shift Bowl to Steering Column Housing Screws	1.9	—	17
Lower Ignition Switch Stud	4.0	—	35
Lower Dimmer Switch Stud Nut	4.0	—	35
Upper Ignition & Dimmer Switch Screw	4.0	—	35
Lower Ignition Switch Screw	4.0	—	35
Lower Dimmer Switch Screw	4.0	—	35
Support Bracket Bolts	30.0	22	—
Upper Ignition & Dimmer Switch Screw	4.0	—	35
Support Bracket Bolts	30.0	22	—

SPECIAL TOOLS

1. J 1859-03

2. J 23653-C

1. Steering Wheel Puller
2. Lock Plate Compressor

V2124

Figure 22 – Special Tools

SECTION 3F2

STEERING COLUMN - TILT

NOTICE: When fasteners are removed, always reinstall them at the same location from which they were removed. If a fastener needs to be replaced, use the correct part number fastener for that application. If the correct part number fastener is not available, a fastener of equal size and strength (or stronger) may be used. Fasteners that are not reused, and those requiring thread locking compound will be called out. The correct torque value must be used when installing fasteners that require it. If the above conditions are not followed, parts or system damage could result.

CONTENTS

SUBJECT	PAGE
General Description	3F2- 1
Diagnosis of the Steering Column	3F2- 2
On-Vehicle Service	3F2- 9
Inspection	3F2- 9
Steering Wheel Replacement	3F2- 9
Intermediate Shaft Replacement	3F2-10
Steering Column Replacement	3F2-10
Turn Signal Lever Replacement	3F2-11
Turn Signal Switch Assembly Replacement (Column Shift)	3F2-14
Buzzer Switch Assembly Replacement (Column Shift)	3F2-14
Steering Column Lock Cylinder Set Replacement (Column Shift)	3F2-14
Pivot and Pulse Switch Assembly Replacement (Column Shift)	3F2-16
Dimmer Switch Assembly Switch Replacement (Column Shift)	3F2-24
Ignition Switch Assembly Replacement (Column Shift)	3F2-24
Turn Signal Switch Assembly Replacement (Floor Shift)	3F2-30
Buzzer Switch Assembly Replacement (Floor Shift)	3F2-30
Steering Column Lock Cylinder Set Replacement (Floor Shift)	3F2-30
Pivot and Pulse Switch Assembly Replacement (Floor Shift)	3F2-32
Dimmer Switch Assembly Switch Replacement (Floor Shift)	3F2-39
Ignition Switch Assembly Replacement (Floor Shift)	3F2-39
Unit Repair - Column Shift	3F2-12
Unit Repair - Floor Shift	3F2-28
Specifications	3F2-42
Special Tools	3F2-42

GENERAL DESCRIPTION

The locking energy-absorbing steering column includes three important features in addition to the steering function:

1. The column is energy-absorbing, designed to compress in a front-end collision to minimize the possibility of injury to the driver of the vehicle.
2. The ignition switch and lock are mounted conveniently on the column.
3. With the column mounted lock, the ignition, steering, and gearshifting operation can be locked to inhibit theft of the vehicle.

The column may be disassembled and reassembled. To insure the energy-absorbing action, it is important that the specified screws, bolts, and nuts be used only as designated and that they are tightened to the specified torque.

NOTICE: When the column is removed from the vehicle, such actions as a sharp blow on the end of the steering shaft or shift lever, leaning on the column assembly, or dropping of the assembly could shear or loosen the plastic fasteners that maintain column rigidity.

DIAGNOSIS OF THE STEERING COLUMN

PROBLEM	POSSIBLE CAUSE	CORRECTION
Lock System Will Not Unlock	1. Lock bolt damaged. 2. Faulty lock cylinder. 3. Damaged housing. 4. Damaged or collapsed sector. 5. Damaged rack.	1. Replace the lock bolt. 2. Replace or repair the lock cylinder. 3. Replace the housing. 4. Replace the sector. 5. Replace the rack.
Lock System Will Not Lock	1. Lock bolt spring is broken. 2. Damaged sector tooth. 3. Faulty lock cylinder. 4. Damaged housing. 5. Damaged rack. 6. Interference between the bowl and coupling. 7. Ignition switch stuck. 8. Actuator rod restricted or bent. 9. Transmission linkage adjustment is incorrect.	1. Replace the spring. 2. Replace the sector tooth. 3. Replace the lock cylinder. 4. Replace the housing. 5. Replace the rack. 6. Adjust or replace. 7. Adjust or replace. 8. Adjust or replace. 9. Adjust.
Lock System—High Lock Effort	1. Lock cylinder is faulty. 2. Ignition switch is faulty. 3. Rack preload spring is broken or weak. 4. Burrs on the sector, rack, housing, support, tang of the shift gate or actuator rod coupling. 5. Bent sector shaft. 6. Distorted rack. 7. Misalignment of the housing to the cover (tilt only). 8. Distorted coupling slot in the rack (tilt only). 9. Bent or restricted actuator rod. 10. Ignition switch mounting bracket is bent.	1. Replace the lock cylinder. 2. Replace the ignition switch. 3. Replace the spring. 4. Remove the burrs. 5. Replace the shaft. 6. Replace the rack. 7. Replace either or both. 8. Replace the rack. 9. Straighten or replace the rod. 10. Straighten or replace the bracket.
Lock Cylinder—High Effort Between The "Off" and "Off-Lock" Positions	1. Burr on tang of shift gate. 2. Distorted rack.	1. Remove the burr. 2. Replace the rack.
Sticks In "Start" Position	1. Actuator rod is deformed. 2. Any high effort condition.	1. Straighten or replace the rod. 2. See "correction" under the high effort diagnosis.
Key Cannot Be Removed In The "Off-Lock" Position	1. Ignition switch is not set correctly. 2. Faulty lock cylinder.	1. Adjust ignition switch. 2. Replace the lock cylinder.
The Lock cylinder Can Be Removed Without Depressing The Retainer	1. Faulty retainer. 2. Burr over the retainer slot in the housing cover.	1. Replace the lock cylinder. 2. Remove the burr.
Lock Bolt Hits The Shaft Lock In The "Off" And "Park" Positions	Ignition switch is not set correctly.	Adjust the ignition switch.

DIAGNOSIS OF THE STEERING COLUMN (cont'd)

PROBLEM	POSSIBLE CAUSE	CORRECTION
Noise In The Column	1. Flexible coupling pulled apart. 2. Column not correctly aligned. 3. One click in Off-Unlock position and when the steering wheel is moved. 4. Horn contact ring not lubricated. 5. Lack of grease on the bearings or bearing surface. 6. Lower shaft bearing is tight or frozen. 7. Upper shaft bearing is tight or frozen. 8. Lock plate retaining ring is not seated. 9. Steering shaft snap ring is not seated. 10. Shroud or housing is loose. 11. Sheared intermediate shaft plastic joint.	1. Align the column and replace the flexible coupling. 2. Align the column. 3. Normal seating of the lock bolt. 4. Lubricate. 5. Lubricate the bearings. 6. Replace the bearing. Inspect the shaft and replace if scored. 7. Replace the housing assembly. 8. Replace the retaining ring. Inspect for proper seating in the groove. 9. Replace the snap ring. Inspect for proper seating in the groove. 10. Tighten mounting screws. 11. Repair or replace the steering shaft. Align the column.
High Steering Shaft Effort	1. Column assembly is misaligned in the vehicle. 2. Tight or frozen upper or lower bearings. 3. Binding intermediate shaft U-joints.	1. Align correctly. 2. Replace the bearings. 3. Repair or replace the intermediate shaft.
High Shift Effort	1. Column assembly is misaligned in the vehicle. 2. Lower bowl bearing is not aligned correctly. 3. Lack of grease on the bearing or seal areas. 4. Shift tube is bent or broken.	1. Align correctly. 2. Align correctly. 3. Lubricate bearings and seals. 4. Replace the shift tubes.
Improper Transmission Shifter	1. Sheared shift tube joint. 2. Improper transmission linkage adjustment. 3. Loose lower shift lever. 4. Sheared lower shift lever weld.	1. Replace the shift tube assembly. 2. Adjust the linkage. 3. Replace the shift tube assembly. 4. Replace the shift tube assembly.
Lash In Mounted Column Assembly	1. Column mounting bracket bolts loose. 2. Broken weld nuts on the jacket. 3. Column bracket capsule sheared. 4. Loose shoes in the housing (tilt only). 5. Loose tilt head pivot pins (tilt only).	1. Tighten to specifications. 2. Replace the jacket assembly. 3. Replace the bracket assembly. 4. Replace the shoes. 5. Replace the pivot pins.
Excessive Play In The Mounted Steering Column Assembly	1. Column mounting bracket bolts loose. 2. Loose support screws. 3. Loose tilt head pivot pins. 4. Loose lock shoe pin in the support.	1. Tighten to specifications. 2. Tighten to specifications. 3. Replace the pivot pins. 4. Replace the pin.
Housing Loose	1. Excessive clearance between the holes in the support or the housing and pivot pin diameter. 2. Faulty anti-lash spring in the centering spheres. 3. Upper bearing not seating in the bearing race. 4. Upper bearing inner race seat missing. 5. Bearing preload spring broken. 6. Loose support screws.	1. Replace either or both. 2. Replace the spring. 3. Replace both. 4. Install the seat. 5. Replace preload spring. 6. Tighten to specifications.

DIAGNOSIS OF THE STEERING COLUMN (cont'd)

PROBLEM	POSSIBLE CAUSE	CORRECTION
Housing Scraping On The Bowl	Bowl bent or not concentric with the hub.	Replace the bowl.
Steering Wheel Loose Every Other Tilt Position	Loose fit between the lock shoe and pivot pin.	Replace both.
Steering Column Will Not Lock In Any Tilt Position	1. Lock shoe grooves may have burrs or dirt. 2. Lock shoe spring is weak or broken. 3. Lock shoe seized on its pivot pin.	1. Replace lock shoes and clean the grooves. 2. Replace the spring. 3. Replace both lock shoes.
Noise When Tilting The Column	1. Tilt spring rubbing in the housing. 2. Tilt bumpers are worn.	1. Lubricate. 2. Replace the tilt bumpers.
Steering Wheel Fails To Return The Top Tilt Position	1. Pivot pins are bound up. 2. Wheel tilt spring is faulty. 3. The turn signal switch wires are too tight.	1. Replace the pivot pins. 2. Replace the spring. 3. Reposition the wires.
Dimmer Switch Will Not Function	1. Loose connector at the dimmer switch. 2. Improper adjustment. 3. Internally damaged or worn switch.	1. Tighten or replace. 2. Readjust. 3. Replace.
Turn Signal Will Not Cancel	1. Loose switch mounting screws. 2. Switch or anchor bosses broken. 3. Broken, missing or out of position detent, return or cancelling spring. 4. Uneven or incorrect cancelling cam to cancelling spring interference.	1. Tighten screws to 2.8 N·m (25 in. lbs.) 2. Replace the switch. 3. Reposition or replace the springs as required. 4. Adjust the switch position. • If the interference is correct and switch will still not cancel, replace the switch. • If the interference cannot be corrected by the switch adjustment, replace the cancelling cam.
Turn Signal Difficult to Operate	1. Actuator rod loose. 2. Yoke broken or distorted. 3. Loose or misplaced springs. 4. Foreign parts and/or materials. 5. Switch mounted loosely.	1. Tighten screw to 1.3 N·m (12 in. lbs.) 2. Replace the switch. 3. Reposition or replace the springs. 4. Remove the foreign parts and/or material. 5. Tighten screws to 2.8 N·m (25 in. lbs.)
Turn Signal Will Not Indicate Lane Change	1. Broken lane change pressure pad or spring hanger. 2. Broken missing or misplaced lane change spring. 3. Jammed base or wires.	1. Replace the switch. 2. Replace or reposition as required. 3. Loosen mounting screws, reposition base or wires and tighten the screws to 4.8 N·m (25 in. lbs.).
Turn Signal Will Not Stay In Turn Position	1. Foreign material or loose parts impending movement of the yoke. 2. Broken or missing detent or cancelling springs. 3. None of the above.	1. Remove material and/or parts. 2. Replace the spring. 3. Replace the switch.
Hazard Switch Cannot Be Turned Off	Foreign material between hazard support cancelling leg and yoke.	Remove the foreign material. • No foreign material. Replace the turn signal switch.

DIAGNOSIS OF THE STEERING COLUMN (cont'd)

PROBLEM	POSSIBLE CAUSE	CORRECTION
Hazard Switch Will Not Stay On Or Difficult To Turn Off	1. Loose switch, mounting screws. 2. Interference with other components. 3. Foreign material. 4. None of the above.	1. Tighten mounting screws to 2.8 .nm (25 in. lbs.). 2. Remove the interference. 3. Remove the foreign material. 4. Replace the switch.
No Turn Signal Lights	1. Faulty or blown fuse. 2. Inoperative turn signal flasher. 3. Loose chassis to column connector. 4. Disconnect column to chassis connector. connect new switch to chassis and operate switch by hand. If vehicle lights now operate normally, signal switch is inoperative. 5. If vehicle lights do not operate, check chassis wiring for opens, grounds, etc.	1. Replace fuse and check operation. 2. Replace the turn signal flasher. 3. Connect securely, check operation. 4. Replace the signal switch. 5. Repair the chassis wiring.
Turn Indicator Lights On, But Not Flashing	1. Inoperative turn flasher. 2. Loose chassis to column connection. 3. Inoperative turn signal switch. 4. To determine if turn signal switch is faulty, substitute a new switch into the circuit and operate the switch by hand. If the vehicle's lights operate normally, the signal switch is inoperative. 5. If the vehicle's lights do not operate, check light sockets for high resistance connections, the chassis wiring for opens, grounds, etc.	1. Replace the turn flasher. 2. Connect securely and check operation. 3. Replace the turn signal switch. 4. Replace the signal switch. 5. Repair the chassis wiring.
Front Or Rear Turn Signal Lights Are Not Flashing	1. Burned out fuse. 2. Burned out or damaged turn signal bulb. 3. High resistance connection to ground at the bulb socket. 4. Loose chassis to column connector. 5. Disconnect column to the chassis connector. Connect a new switch into the system and operate the switch by hand. If turn signal lights are now on and flash, the turn signal switch is inoperative. 6. If vehicle lights do not operate, check the chassis wiring harness to light sockets for opens, grounds, etc.	1. Replace fuse and check operation. 2. Replace the bulb. 3. Remove or repair the faulty connection and check operation. 4. Connect securely and check operation. 5. Replace the turn signal switch. 6. Repair the chassis wiring.
Stop Light Not On When Turn Indicated	1. Burned out fuse. 2. Loose column to chassis connection. 3. Disconnect column to chassis connector. Connect new switch into system without removing old. Operate switch by hand. If brake lights work with switch in the turn position, signal switch is faulty. 4. If brake lights do not work, check connector to stop light, the sockets for grounds, opens, etc.	1. Replace fuse and check operation. 2. Connect securely and check operation. 3. Replace the signal switch. 4. Repair connector to stop lights circuits.

DIAGNOSIS OF THE STEERING COLUMN (cont'd)

PROBLEM	POSSIBLE CAUSE	CORRECTION
Turn Indicator Panel Lights Not Flashing	1. Burned out bulbs. 2. High resistance to ground at the bulb socket. 3. Opens, grounds in wiring harness from the front turn signal bulb socket to the indicator lights.	1. Replace the bulbs. 2. Replace the socket. 3. Locate and repair as required.
Turn Signal Lights Flash Very Slowly	1. Inoperative turn signal flasher. 2. System charging voltage low. 3. High resistance ground at light sockets. 4. Loose chassis to column connection. 5. Disconnect column to chassis connector. Connect new switch into system without removing old. Operate switch by hand. If flashing occurs at normal rate, the signal switch is faulty. 6. If the flashing rate is still extremely slow, check chassis wiring harness from the connector to the light sockets for high resistance.	1. Replace the turn signal flasher. 2. Increase voltage to specifications. Refer to ENGINE ELECTRICAL (SECTION 6D) in this manual. 3. Repair high resistance grounds at the light sockets. 4. Connect securely and check operation. 5. Replace signal switch. 6. Locate and repair as required. Refer to CHASSIS ELECTRICAL (SECTION 8B) in this manual.
Hazard Signal Lights Will Not Flash—Turn Signal Functions Normally	1. Blown fuse. 2. Inoperative hazard warning flasher. 3. Loose chassis to column connection. 4. Disconnect column to chassis connector. Connect new switch into system without removing old. Depress the hazard warning button and observe the hazard warning lights. If they now work normally, the turn signal switch is faulty. 5. If the lights do not flash, check wiring harness "K" lead (brown) for open between hazard flasher and harmonica connector. If open, fuse block is faulty.	1. Replace fuse and check operation. 2. Replace the hazard warning flasher. 3. Connect securely and check operation. 4. Replace the turn signal switch. 5. Replace fuse block. Refer to CHASSIS ELECTRICAL (SECTION 8B) in this manual.

DIAGNOSIS OF THE STEERING COLUMN (cont'd)

PROBLEM	POSSIBLE CAUSE	CORRECTION
Tone Alarm Does Not Sound With Key Fully Inserted In Lock Cylinder With Driver's Door Open	1. Loose connection at the tone alarm.	1. Connect securely.
	2. Voltage not available to the tone alarm.	2. Check the continuity of the chassis wiring and repair as required.
	3. Faulty tone alarm.	3. Replace the tone alarm.
	4. Door jamb switch on the driver's side is maladjusted or inoperative.	4. Adjust or replace as required.
	5. Short in the chassis wiring.	5. Check by separating chassis to column connector. Connect E and F female contacts on the chassis side (bent paper clip will work). If tone alarm sounds, continue diagnosis. If not, locate and repair chassis wiring.
	6. Short or fault in the signal switch wiring.	6. Connect male E and F contacts of connector with the jumper. Check buzzer switch pads with the ohmmeter. If contact is made, function is normal. If not, replace the signal switch.
	7. Chips, burrs, foreign material is preventing actuator tip function. NOTICE: Key must be removed or the cylinder in the "run" position before removing the lock cylinder.	7. Remove chips and burrs. Reassemble and check.
	8. Faulty lock cylinder.	8. With the lock cylinder out, fully insert and remove the key. The actuator should extend and retract smoothly. Total expansion of tip should be 1.25 mm (0.050-inch). If not, replace the lock cylinder.
	9. Chips, foreign material affecting the tone alarm switch operation.	9. assemble and check.
	10. Damaged or broken tone alarm switch.	10. Replace the tone alarm switch.
	11. Inoperative tone alarm switch (switch appears good but will not make the tone alarm switch function check).	11. Connect the ohmmeter leads to the tone alarm switch probes. Press on the actuator pad until the interior points contact. If contact is not made, replace the tone alarm switch.
	12. Tone alarm switch contact gap is too large.	12. Reset the contact gap.
	13. If the tone alarm fault has not yet been detected, connect a continuity meter (or light) to the male E and F connector contacts. Insert the key the full depth into the lock cylinder. If contact is made with the key in, and is not made with it out, the function is normal. Retrace the initial diagnostic steps. If contact is not established, the fault is in the column.	13. With the fault isolated in the column, disassemble the upper end of the column until the signal switch mounting screws have been removed. Lift the switch and check the probes of the tone alarm switch to ensure good contact with the pads in the signal switch. Bend the probes, if required, then reseat the signal switch and install the three screws. Check the function.

DIAGNOSIS OF THE STEERING COLUMN (cont'd)

PROBLEM	POSSIBLE CAUSE	CORRECTION
Tone Alarm Does Not Sound With Key Fully Inserted In Lock Cylinder With Driver's Door Open (Cont'd)	14. If the fault has not yet been isolated and repaired, connect ohmmeter to the tone alarm switch probes. Fully insert and remove the key from the lock cylinder. If contact is made with the key in, and is broken with it out, the function is normal. Retrace the diagnostic steps. If contact is not made, the fault is in the lock cylinder or tone alarm switch.	14. Setting the contact gap. Press a 0.75 mm (0.030-inch) wire type spark plug gap wire with flat piece of stock on the actuator pad. If contact is not made, adjust switch until positive contact is made (use ohmmeter). With positive contact at 0.75 mm (0.030-inch) use a 0.65 mm (0.025-inch) plug gap wire beneath the flat stock. No contact should occur. Adjust. When the switch will make contact with the 0.75 mm (0.030-inch) wire and not with the 15.65 *mm (0.025-inch) wire, the tone alarm* switch is set at the low limit.
Tone Alarm Continues To Operate With Key In The Lock Cylinder With The Driver's Door Either Opened Or Closed And Ceases When Key Is Removed	1. Door jamb switch on driver's side maladjusted or inoperative. 2. Wire from signal switch to door jamb switch shorted.	1. Adjust or replace as required. 2. If on signal switch side, replace signal switch. If on chassis side, find and repair. This condition indicates the lock cylinder or tone alarm switch is at fault. To verify, check for continuity at the E and F male connector contacts with the key removed from the cylinder. If continuity exists, the fault is in the column.
Tone Alarm Continues To Operate With Key Out, But Stops When Driver's Door Is Closed	1. Lock cylinder binding (turn lock toward start position. If tone alarm stops in the run position or when turned past run run towards the start, the problem is a stick lock cylinder actuator). 2. Chips, foreign material in lock cylinder bore. 3. Sticky lock cylinder actuator tip. 4. Damaged or broken tone alarm switch. 5. Tone alarm switch contact gap is too close.	1. Replace the lock cylinder. 2. Remove, assemble and recheck function. 3. Replace the lock cylinder. 4. Replace the tone alarm switch. 5. Adjust as specified.

D0164

ON-VEHICLE SERVICE

INSPECTION

SHIFTER SHAFT

Separation of the shifter shaft sections will be internal and cannot be visually identified. Hold the lower end of the Shifter shaft and move the shift lever on the column through its ranges and up and down. If there is little or no movement of the shifter shaft, the plastic joints are sheared.

STEERING SHAFT

If the steering shaft plastic pins have been sheared, the shaft will rattle when struck lightly from the side and some lash may be felt when rotating the steering wheel while holding the rag joint. If the steering shaft pins are sheared due to minor collision without serious damage to other components, the vehicle can be safely steered; however, steering shaft replacement is recommended.

COLUMN JACKET

Inspect the jacket section of the column for looseness, and/or bends.

COLUMN SUPPORT BRACKET

Damage in this area will be indicated by separation of the mounting capsules from the bracket. The bracket will have moved forward toward the entire compartment and will usually result in collapsing of the jacket section of the steering column.

STEERING COLUMN FOR ACCIDENT DAMAGE

Refer to:

- Column Shift: "Unit Repair - Column Shift" (Figure 30).
- Floor Shift: "Unit Repair - Floor Shift" (Figure 25).

STEERING WHEEL REPLACEMENT

Remove or Disconnect (Figures 1 and 2)

Tools Required:
J 1859-03 Steering Wheel Puller

1. Battery ground cable.
2. Horn button cap.
3. Retainer and steering wheel nut.
4. Horn lead assembly (some models).
   - Mark the relationship of the steering wheel to the steering shaft.
5. Steering wheel. Use J 1859-03. Do not hammer on the puller, or damage could result to the steering column.

Install or Connect

- The turn signal control assembly must be in the neutral position when assembling the steering wheel.

1. Steering wheel onto the steering shaft. Align the marks made at removal.

Important

- Do not misalign the steering wheel more than 20 mm (0.79 inch) from the horizontal centerline.

2. Horn lead assembly (some models).

NOTICE: See "Notice" on page 3F2-1.

3. Steering wheel nut.

Tighten

- Nut to 40 N·m (30 ft. lbs.).

4. Retainer
5. Horn button cap.
6. Battery ground cable.

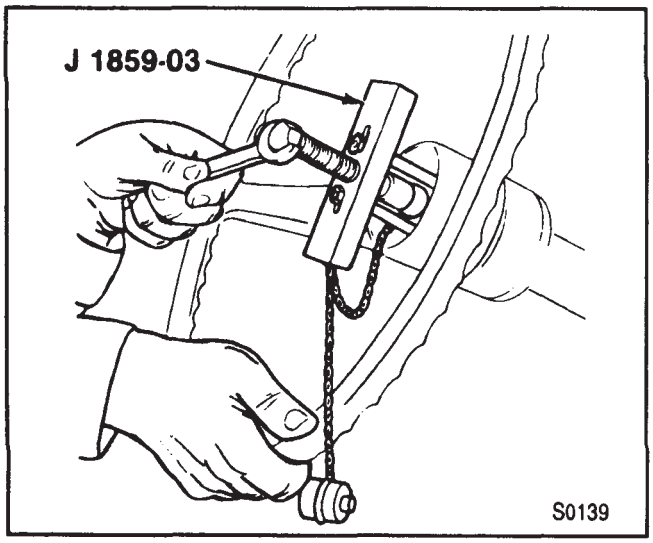

Figure 1—Steering Wheel Removal

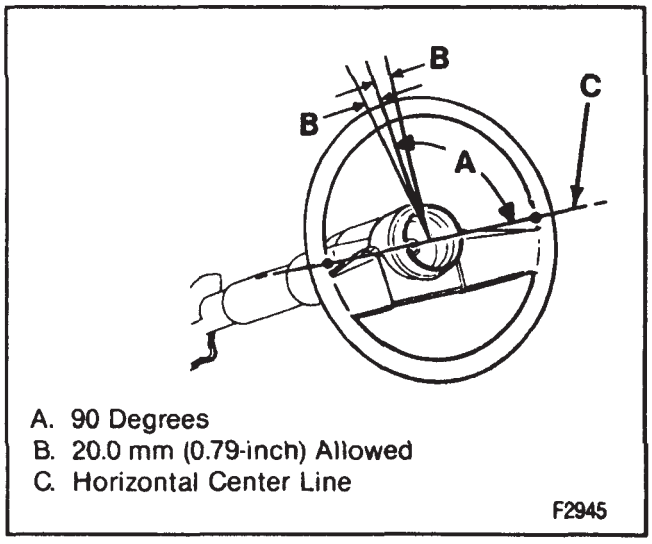

Figure 2—Steering Wheel Alignment

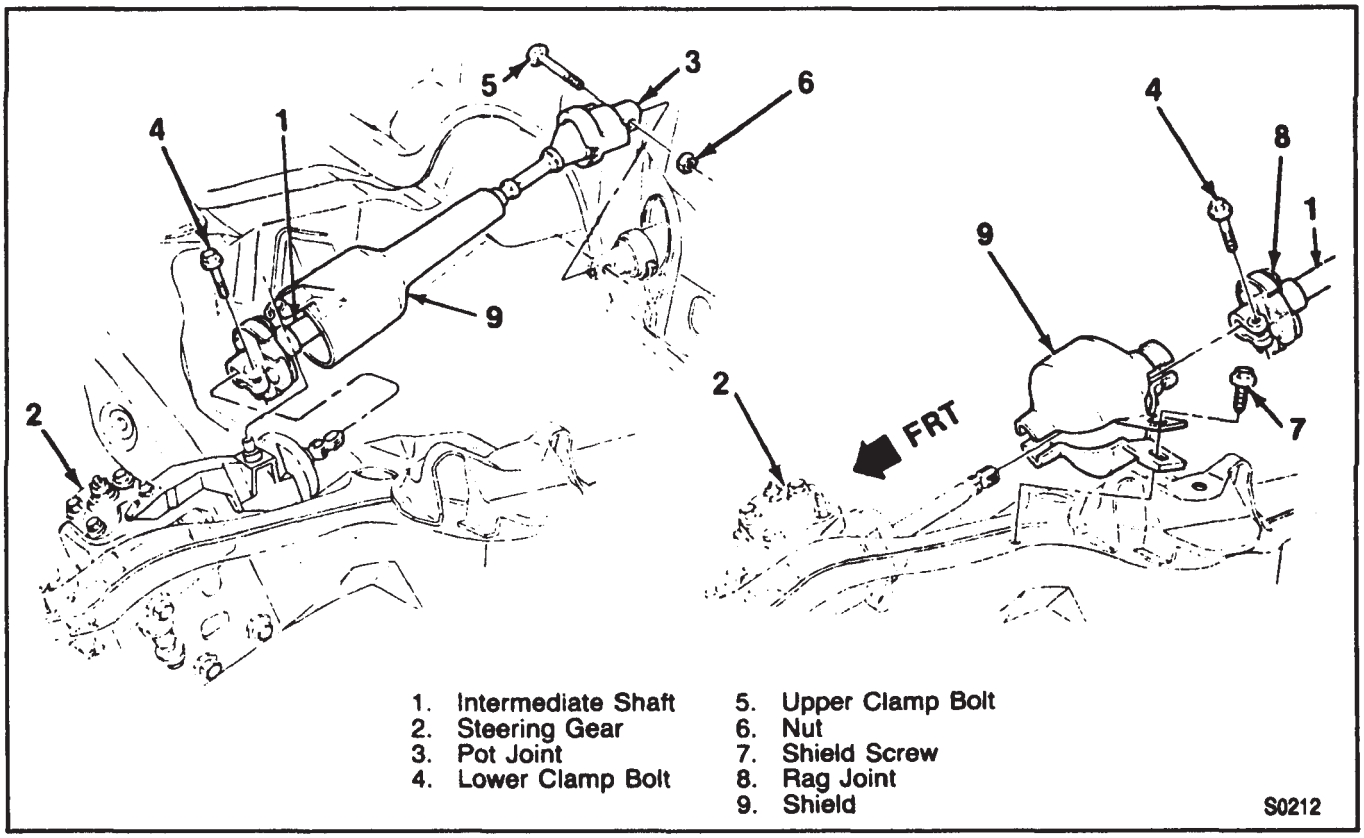

Figure 3—Intermediate Shaft Installation

INTERMEDIATE SHAFT REPLACEMENT

Remove or Disconnect (Figure 3)

- Set front wheels in the straight ahead position.
- Mark the pot joint to steering shaft and the rag joint to steering gear wormshaft relationship.

1. Shield screw (7) and shield (9).
2. Upper clamp bolt (5) and nut (6).
3. Lower clamp bolt (4).
4. Intermediate shaft (1).

Install or Connect (Figures 3 and 4)

NOTICE: For steps 2, 3, and 4 see "Notice" on page 3F2-1.

1. Intermediate shaft (1).
2. Upper clamp bolt (5) and nut (6).

Tighten

- Nut to 62 N·m (45 ft. lbs.).

3. Lower clamp bolt (4).

Tighten

- Bolt to 35 N·m (26 ft. lbs).

4. Shield (9) and shield screw (7).

Tighten

- Screw to 6 N·m (4 in. lbs.).

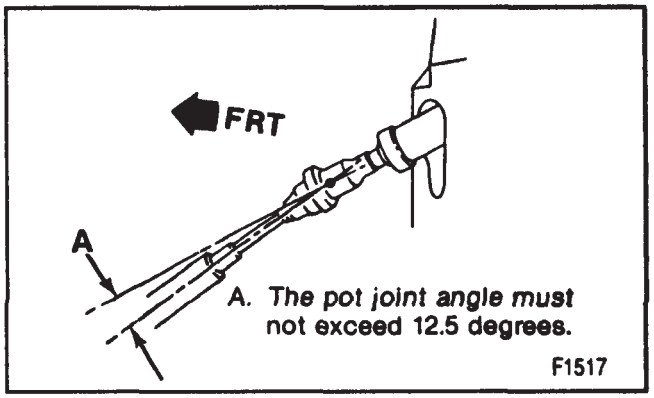

Figure 4—Pot Joint Angle

Measure

- Pot joint operating angle. The angle must not exceed 12.5 degrees maximum.

STEERING COLUMN REPLACEMENT

Remove or Disconnect (Figures 3 and 5)

1. Negative Battery cable.
2. Transmission control linkage from the column shift tube levers.
3. Upper clamp bolt (5) from the steering shaft. Mark the relationship of the pot joint to the steering shaft.

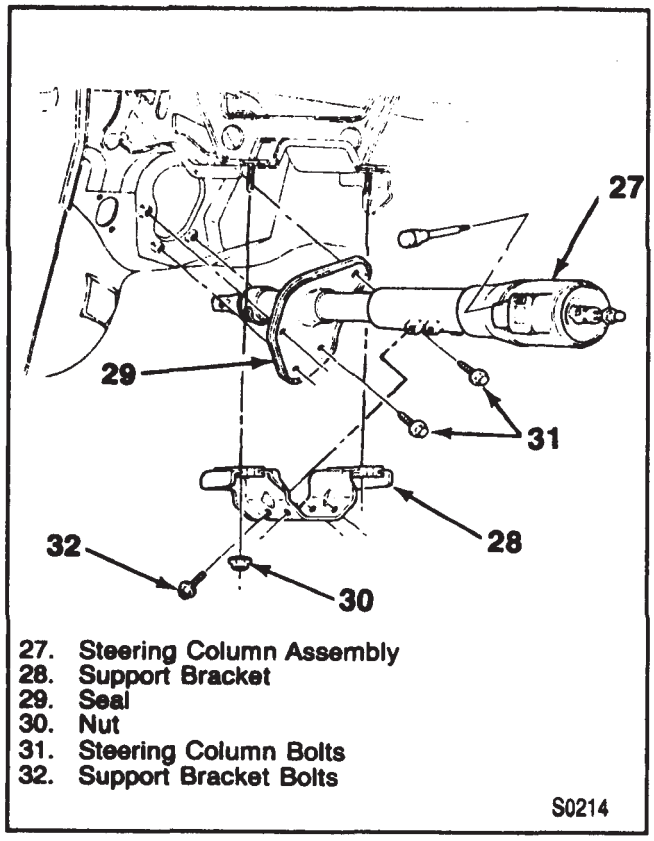

Figure 5—Steering Column Removal and Installation

4. Support bracket bolts (32), nuts (30), and support bracket (28).
5. Steering column bolts (31) and seal (29).
6. Steering wheel. Refer to "Steering Wheel Replacement" in this section.
7. Steering column harness at the connectors.
   - Disconnect the neutral start switch and back-up lamp switch connectors (some models). Refer to CHASSIS ELECTRICAL (SECTION 8B) in this manual.
8. Steering column assembly (27).
   - Rotate the column so the shift lever clears the dash opening on column shift vehicles.

Install or Connect (Figures 3 and 5)

NOTICE: For steps 3 and 4 see "Notice" on page 3F2-1.

1. Lower the end of the steering column assembly (27) through the dash opening.
2. Support bracket (28), support bracket bolts (32), and nuts (30) loosely. Tighten screws and nuts finger tight.
   - Guide the steering shaft into the pot joint lining up the marks made at removal.
3. Upper clamp bolt (5). The bolt must pass through the shaft undercut.

Tighten

- Upper clamp bolt to 35 N·m (26 ft. lbs.).

Measure

- Pot joint operating angle must not exceed 12.5 degrees (figure 4).

4. Steering column bolts (31) through the cover and seal (29) to the dash panel.

Tighten

- Steering column bolts (31) to 14 N·m (10 ft. lbs.).
- Support bracket bolts (32) to 30 N·m (22 ft. lbs.).
- Nuts (30) to 27 N·m (20 ft. lbs.).

5. Connectors to the steering column harness.
   - Connect the neutral start switch and back-up lamp switch connectors (some models). Refer to CHASSIS ELECTRICAL (SECTION 8D) in the manual.
6. Steering wheel. Refer to "Steering Wheel Replacement" in this section.
7. Transmission control linkage. (Column Shift vehicles only).
8. Negative Battery cable.

TURN SIGNAL LEVER REPLACEMENT

Refer to ACCESSORIES (SECTION 9B) in this manual.

UNIT REPAIR - COLUMN SHIFT

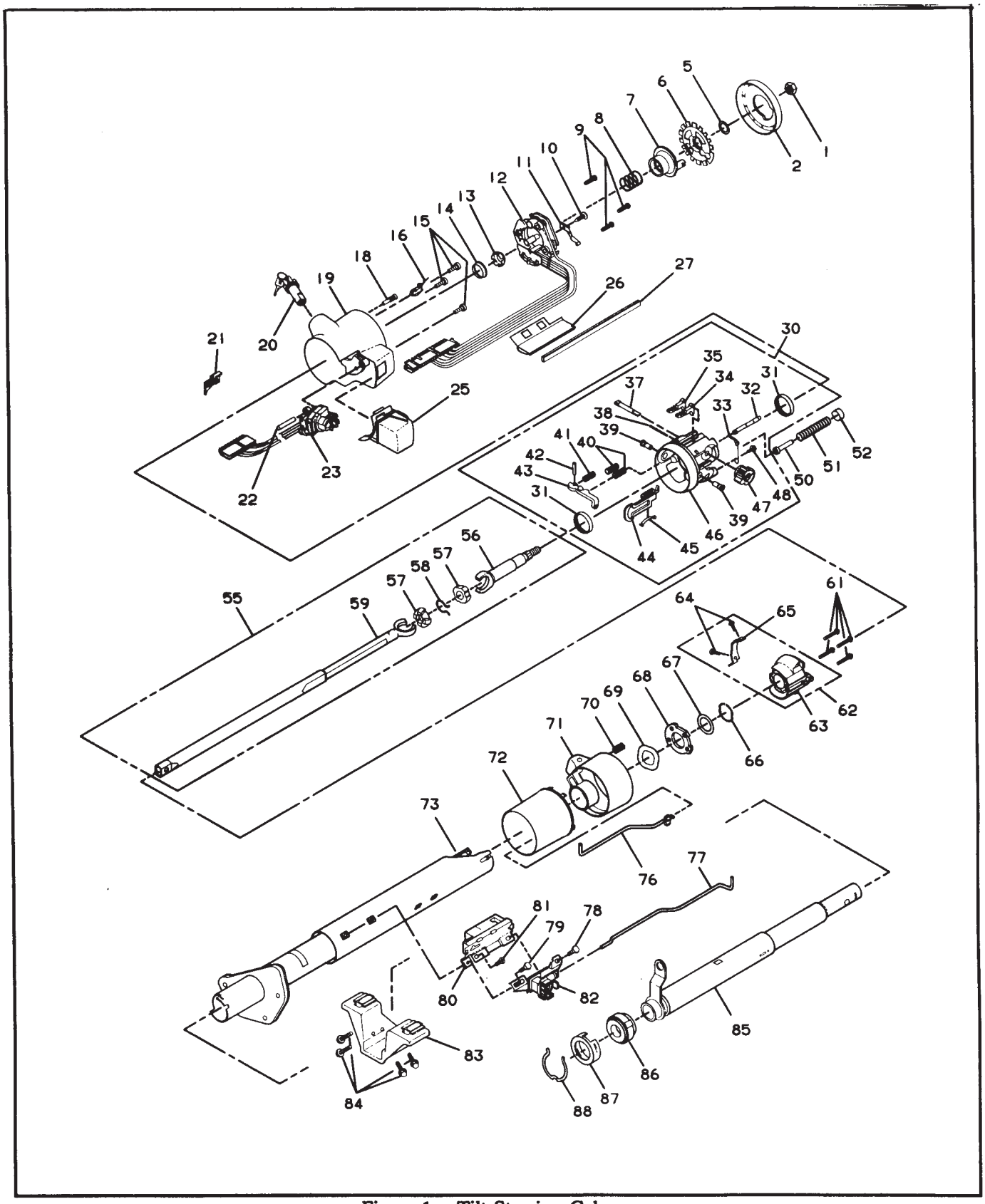

Figure 1 – Tilt Steering Column

1-NUT, HEX LOCKING (M14x1.5)
2-COVER, SHAFT LOCK
5-RING, RETAINING
6-LOCK, SHAFT
7-CAM ASM, TURN SIG CANCEL
8-SPRING, UPPER BEARING
9-SCREW, BNDG HD CR RECESS
10-SCREW, RD WASH HD (M4.2x1.41)
11-ARM, SIGNAL SWITCH
12-SWITCH ASM, TURN SIGNAL
13-SEAT, UPPER BRG INNER RACE
14-RACE, INNER
15-SCREW, PAN HD SOC TAP
16-SWITCH ASM, BUZZER
18-SCREW, LOCK RETAINING
19-COVER ASM, LOCK HOUSING
20-LOCK CYLINDER SET, STRG COL
21-ACTUATOR, DIMMER SW ROD
22-PIN, SWITCH ACTUATOR PIVOT
23-SWITCH ASM, PIVOT & (PULSE)
25-CAP, COL HSG COVER END
26-PROTECTOR, WIRING
27-PROTECTOR, WIRING
30-HOUSING ASM, STRG COLUMN
31-BEARING ASM
32-BOLT ASM, SHAFT LOCK
33-SPRING, LOCK BOLT
34-SHOE, STEERING WHEEL LOCK
35-SHOE, STEERING WHEEL LOCK
37-SHAFT, DRIVE
38-PIN, DOWEL
39-PIN, PIVOT
40-SPRING, SHOE
41-SPRING, RELEASE LEVER
42-PIN, RELEASE LEVER
43-LEVER, SHOE RELEASE
44-RACK, SWITCH ACTUATOR
45-SPRING, RACK PRELOAD
46-HOUSING, STRG COLUMN
47-SECTOR, SWITCH ACTUATOR
48-SCREW, HEX WASHER HEAD
50-GUIDE, SPRING
51-SPRING, WHEEL TILT
52-RETAINER, SPRING
55-SHAFT ASM, STEERING
56-SHAFT ASM, RACE & UPPER
57-SPHERE, CENTERING
58-SPRING, JOINT PRELOAD
59-SHAFT ASM, LOWER STEERING
61-SCREW, SUPPORT
62-SUPPORT ASM, STRG COL HSG
63-SUPPORT, STRG COL HSG
64-SCREW, OVL HD CROSS RECESS
65-GATE, SHIFT LEVER
66-RING, SHIFT TUBE RETAINING
67-WASHER, THRUST
68-PLATE, LOCK
69-WASHER, WAVE
70-SPRING, SHIFT LEVER
71-BOWL ASM, GEARSHIFT LEVER
72-SHROUD, GEARSHIFT BOWL
73-JACKET ASM, STRG COL
76-ACTUATOR ASM, SWITCH
77-ROD, DIMMER SWITCH
78-SCREW, WASH HD (#10-24x.25)
79-SCREW, HEX WASHER HD TAPPING
80-SWITCH ASM, IGNITION
81-SCREW, FLT HD (#10-24 x .31)
82-SWITCH ASM, DIMMER
83-BRACKET ASM, STRG COL SUPT
84-BOLT, FLGD HEX HD (M8X1.25)
85-TUBE ASM, SHIFT
86-BEARING ASM, ADAPTER &
87-RETAINER, BEARING
88-CLIP, LOWER BEARING ADAPTER

Service Kits

201-RACK SERV KIT, COL SECTOR &
-INCLUDES: 14,31,33,44,47,48
202-SPRING SERV KIT, TILT COLUMN
-INCLUDES: 13,14,39,50,51,52
203-COVER & SCR SERV KIT, LOCK HSG
-INCLUDES: 18,19
204-SPHERE SERV KIT, TILT COLUMN
-INCLUDES: 57,58
205-GREASE SERV KIT, (SYNTHETIC)

Figure 2 – Tilt Steering Column – Legend

SUB SECTION A – UPPER COLUMN

INCLUDES:
- SHAFT LOCK
- TURN SIGNAL CANCELLING CAM ASM
- UPPER BEARING SPRING
- UPPER BEARING INNER RACE SEAT
- INNER RACE
- TURN SIGNAL SWITCH ASSEMBLY
- BUZZER SWITCH ASSEMBLY
- STRG COL LOCK CYLINDER SET

Tools Required:
J 23653-C Lock Plate Compressor

Important

- Before doing any service procedures in this section, removal Steering Wheel is needed.

Remove or Disconnect
Figures 1 through 6

1. Negative (–) battery cable.

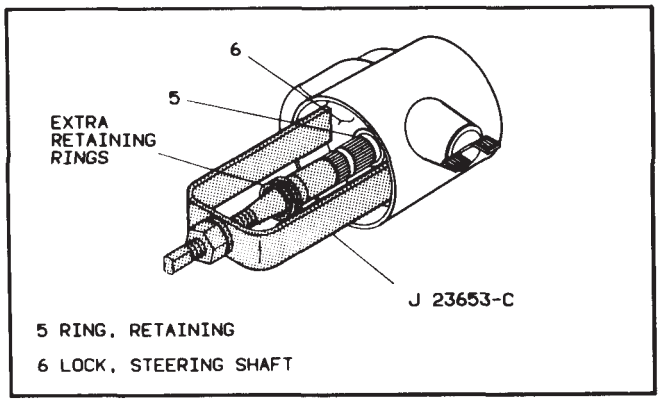

Figure 3 – Removing Shaft Lock Retaining Ring

2. Shaft lock cover (2).
3. Shaft lock retaining ring (5) using J 23653-C to push down shaft lock (6).
   - Dispose of ring (5).

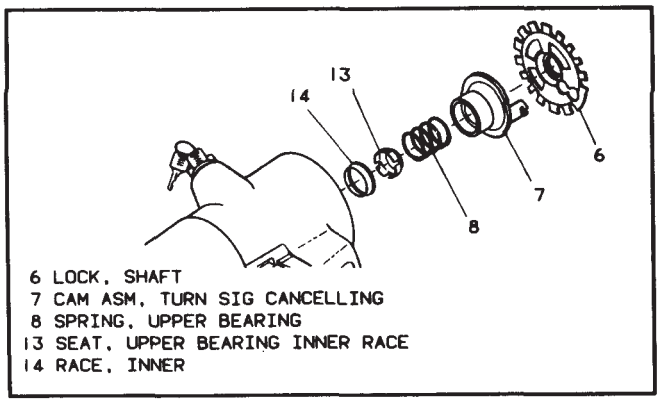

Figure 4 – Removing Components from Upper Shaft

4. Shaft lock (6).
5. Turn signal cancelling cam assembly (7).
6. Upper bearing spring (8).
7. Upper bearing inner race seat (13).
8. Inner race (14).
9. Turn signal to "RIGHT TURN" position (up).
10. Multi-function lever and hazard knob assembly.

11. Screw (10) and signal switch arm (11).
12. Turn signal switch screws (9).

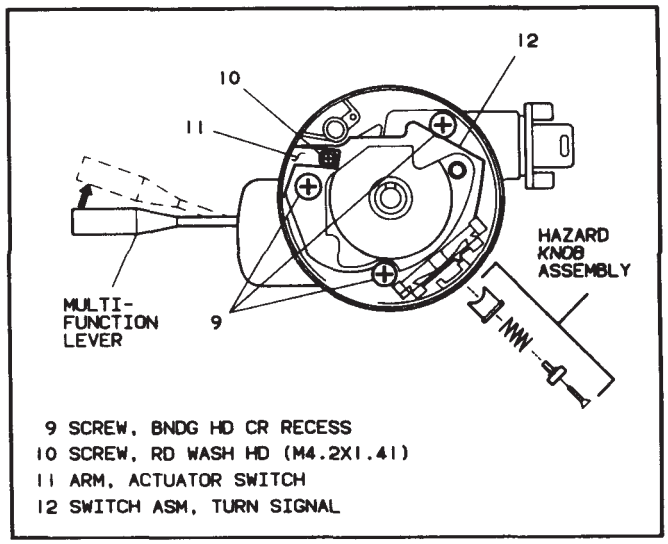

Figure 5 – Turn Signal Switch Removal Preparation

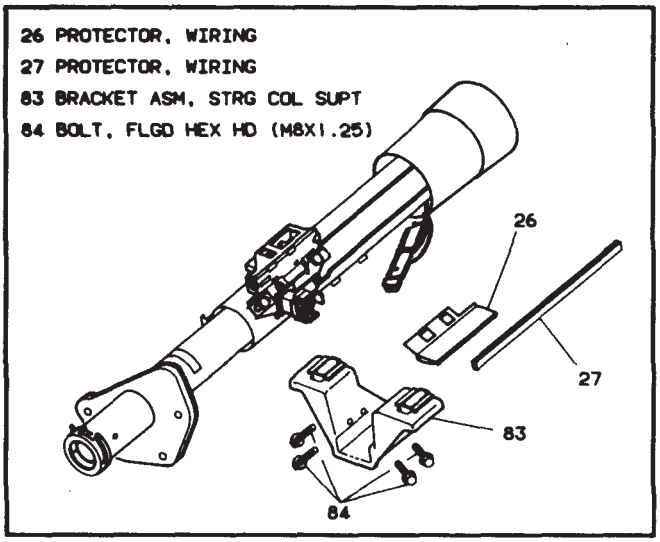

Figure 6 - Removing Turn Signal Switch

13. Turn signal switch assembly (12).
    - Let switch hang freely if removal is not needed.
    - To remove switch (12):

      A) Hex head bolts (84).
      B) Steering column support bracket assembly (83).
      C) Turn signal switch connector from vehicle wire harness.
      D) Wiring protectors (26) and (27).
      E) Gently pull wire harness through column.

14. Key from steering column lock cylinder set (20).
15. Buzzer switch assembly (16).
16. Reinsert key in lock cylinder (20).
    - Key in "LOCK" position.

17. Lock retaining screw (18).
18. Lock cylinder (20).

Install or Connect
Figures 1 and 7

NOTICE: See "Notice" on page 3F2 -1 of this section.

NOTICE: Ensure all fasteners are securely seated before applying needed torque. Failure to do may result in component damage or malfunctioning of steering column.

1. Lock cylinder (20).
2. Lock retaining screw (18).

Tighten

- Tighten screw (18) to 2.5 N·m (22 lb.in.).

3. Key from lock cylinder set (20).
4. Buzzer switch assembly (16).
5. Reinsert key in lock cylinder set (20).
   - Key in "LOCK" position.

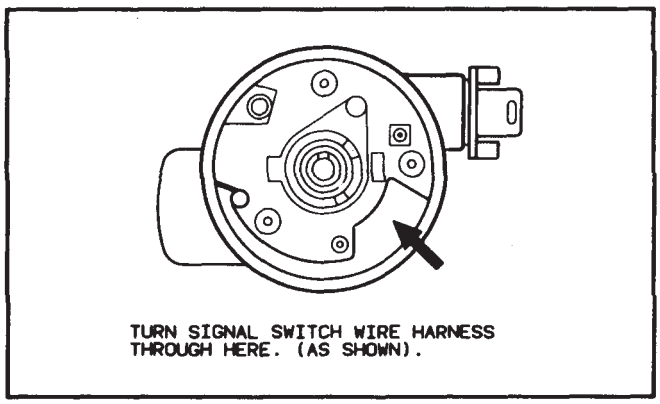

Figure 7 - Wire Harnesses through Column

6. Turn signal switch assembly (12) wire harness through steering column.
   A) Let switch hang freely.
   B) Switch connector to vehicle wire harness.
   C) Wiring protector (26).
   D) Support bracket (83).
   E) Hex head bolts (84).

Tighten

- Tighten bolts (84) to 30.0 N·m (22 lb.ft.)

7. Turn signal switch assembly (12) and screws (9).

Tighten

- Tighten screws (9) to 3.4 N·m (30 lb.in.).

8. Signal switch arm (11) and screw (10).

Tighten

- Tighten screws (10) to 2.3 N·m (20 lb.in.).

9. Hazard knob assembly and multi-function lever.
10. Inner race (14).

11. Upper bearing inner race seat (13).
12. Upper bearing spring (8).
13. Turn signal cancelling cam assembly (7).
    - Lubricate with grease, synthetic (service kit).
14. Shaft lock (6).
15. New shaft lock retaining ring (5) using J 23653-C to push down shaft lock (6).
    - Ring (5) must be firmly seated in groove on shaft.
16. Shaft lock cover (2).

NOTICE: Gently pull lower turn signal wires to remove any wire kinks that may be inside steering column assembly. Failure to do so may cause damage to wire harness.

17. Steering column to vehicle.
18. Negative (–) battery cable.

SUB SECTION B – HOUSING COVER
Figures 1 through 11

INCLUDES:
LOCK HOUSING COVER ASSEMBLY
COLUMN HSG COVER END CAP
PIVOT & (PULSE) SWITCH ASSEMBLY
DIMMER SWITCH ROD ACTUATOR
TILT SPRING ASSEMBLY

Tools Required:
J 23653-C Lock Plate Compressor

Important

- Before doing any service procedures in this section, removal of Steering Wheel is needed.

Important

- Remove only those components necessary to do repairs.

Remove or Disconnect

1. Do all steps, "Remove or Disconnect", Sub Section A.
2. Cover screws (15).
3. Tilt lever.
4. Lock housing cover assembly (19).
5. Column housing cover end cap (25) with dimmer switch rod actuator (21).
6. Switch actuator pivot pin (22).

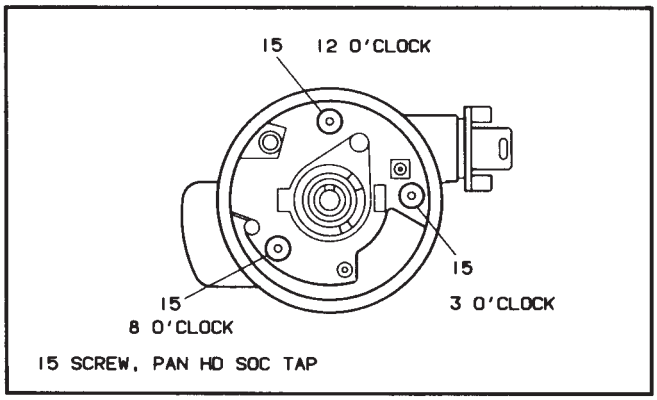

Figure 8 – Lock Housing Cover Screw Positions

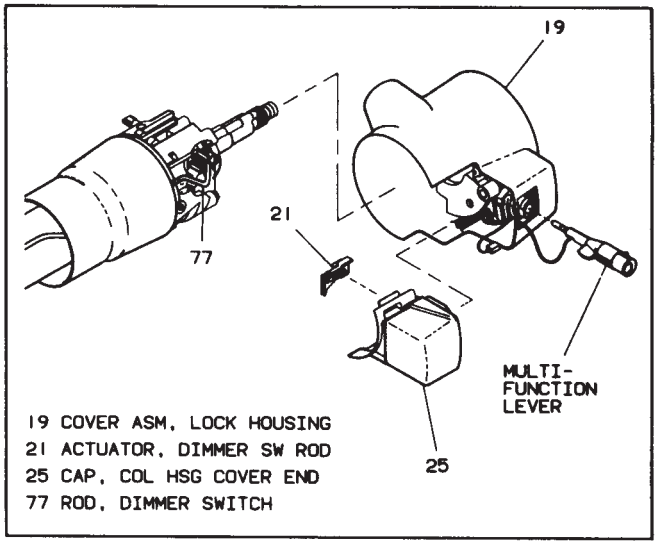

Figure 9 – Removing Lock Housing Cover

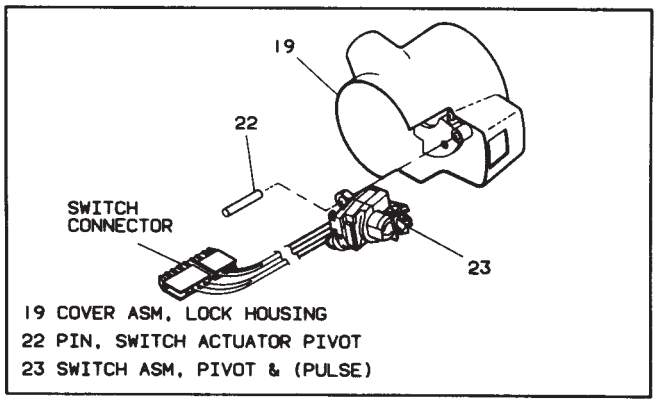

Figure 10 – Removing Pivot & (Pulse) Switch

7. Pivot & (pulse) switch assembly (23).
   - Let switch hang freely if removal is not needed.
   - To remove switch (23):

     A) Hex head bolts (84).
     B) Steering column support bracket assembly (83).
     C) Pivot & (pulse) switch connector from vehicle wire harness.
     D) Wiring protector (26).
     E) Gently pull wire harness through column.

8. Spring retainer (52).
   - Using a cross recess head screwdriver, push retainer down and turn counterclockwise to release.

9. Spring (51) and spring guide (50).

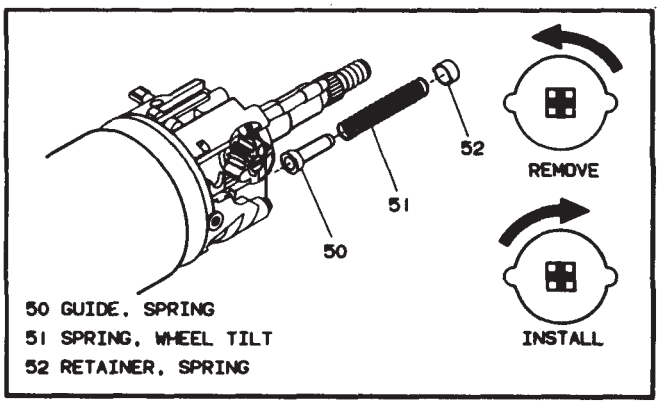

Figure 11 – Removing Tilt Spring Assembly

Install or Connect

NOTICE: See "Notice" on page 3F2 -1 of this section.

NOTICE: Ensure all fasteners are securely seated before applying needed torque. Failure to do so may result in component damage or malfunctioning of steering column.

1. Spring guide (50) and spring (51).
   - Lubricate with lithium grease.

2. Spring retainer (52).
   - Using a cross recess screwdriver push retainer down and turn clockwise to lock in place.

3. Pivot & (pulse) switch assembly (23) to lock housing cover assembly (19).
4. Switch actuator pivot pin (22) to switch (23) and cover (19).
5. Pivot & (pulse) switch wire harness through steering column.

   A) Switch connector to vehicle wire harness.
   B) Wiring protectors (26) and (27).
   C) Support bracket (83).
   D) Hex head bolts (84).

Tighten

- Tighten bolts (84) to 30.0 N·m (22 lb.ft.).

6. Dimmer switch rod actuator (21) to column housing cover end cap (25).
   - Lubricate with lithium grease.

7. End cap (25) to lock housing cover assembly (19).
   - Bottom edge of dimmer switch rod actuator (21) should rest on bend in dimmer switch rod (77).

8. Lock housing cover assembly (19).
9. Screws (15). Tighten screw in 12 o'clock position first, screw in 8 o'clock position second, and screw in 3 o'clock position third.

Tighten

- Tighten screws (15) in same order to 9.0 N·m (80 lb.in.).

10. Do all steps, "Install or Connect", Sub Section A.

SUB SECTION C - MID COLUMN

INCLUDES:
- STEERING COLUMN HOUSING ASM
- STEERING WHEEL LOCK SHOE
- SWITCH ACTUATOR SECTOR
- SWITCH ACTUATOR RACK
- BEARING ASSEMBLY
- LOCK BOLT
- STEERING COL HSG SUPPORT ASM
- STEERING SHAFT ASSEMBLY
- SHIFT TUBE ASSEMBLY

Tools Required:
- J 23653-C Lock Plate Compressor
- J 21854-01 Pivot Pin Remover
- J 22635 Lock Shoe and Release Lever Pin Remover and Installer
- J 8092 Driver Handle
- J 38639 Strg Col Housing Bearing Installer
- J 23072 Shift Tube Remover
- J 23073-01 Shift Tube Installer

Important

- Before doing any service procedures in this section, removal of Steering Wheel is needed.

Remove or Disconnect
Figures 1 through 21,26 and 30

1. Negative (-) battery cable.
2. Steering column from vehicle.

NOTICE: Once steering column is removed from vehicle, the column is extremely susceptible to damage. Dropping steering column assembly on its end could collapse steering shaft or loosen plastic injections which maintain column rigidity. Leaning on steering column assembly could cause jacket to bend or deform. Any of the above damage could impair steering column's collapsible design. If it is necessary to remove steering wheel, use only the specified steering wheel puller. Under no conditions should the end of shaft be hammered on as hammering could loosen plastic injections which maintain steering column rigidity.

Inspect

- Steering column for accident damage (See figure 30)

3. Do all steps, "Remove or Disconnect", Sub Section B.

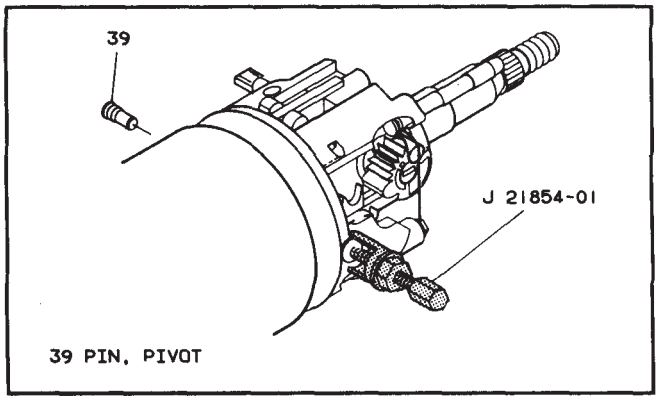

Figure 12 - Removing Pivot Pin

4. Pivot pins (39) using J 21854-01.
   - Reinstall tilt lever.
5. Steering column housing assembly (30).
   - Pull back on tilt lever and pull steering column housing assembly (30) down and away from column.

Important

- Remove only those components necessary to do repairs.

Disassemble

Steering Column Housing Assembly

A) Bearing assembly (31).
B) Hex head screw (48).
C) Lock bolt spring (33).
D) Lock bolt (32).

E) Switch actuator rack (44) and rack preload spring (45).
F) Drive shaft (37).
G) Switch actuator sector (47).
H) Release lever pin (42) using J 22635.
I) Shoe release lever (43).
J) Release lever spring (41).
K) Dowel pin (38) using J 22635.
L) Lock shoes (34) and (35).
M) Shoe springs (40).

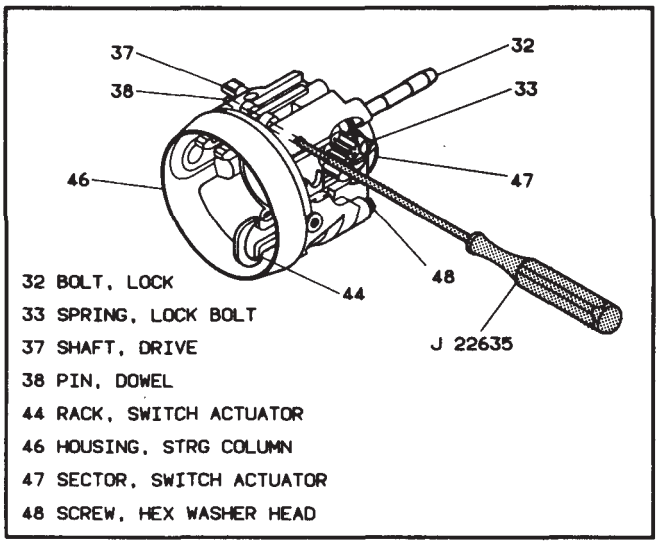

Figure 13 – Lock Housing Cover Components, Exterior

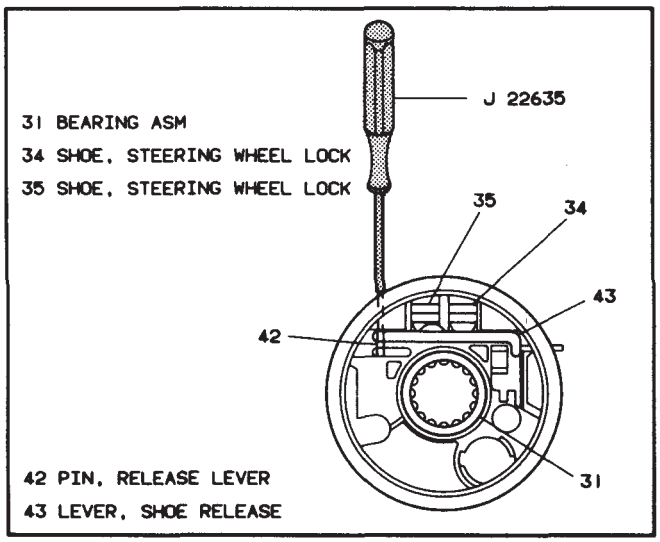

Figure 14 – Lock Housing Cover Components, Interior

Assemble

Steering Column Housing Assembly

A) Shoe springs (40).
B) Lock shoes (34) and (35).
C) Dowel pin (38) using J 22635.
D) Release lever spring (41).
E) Shoe release lever (43).
F) Release lever pin (42) using J 22635.
G) Switch actuator sector (47).
H) Drive shaft (37).
I) Rack preload spring (45).
J) Switch actuator rack (44) to actuator sector (47).
K) Bearing assembly (31) lubricated with lithium grease to column housing (46) using J 38639 and J 8092.
L) Lock bolt (32).
M) Lock bolt spring (33). (Refer to figure 26)
N) Hex head screw (48).

Tighten

- Tighten screw (48) to 4.0 N·m (35 lb.in.).

6. Lower bearing adapter clip (88).
7. Bearing adapter retainer (87).
8. Adapter & bearing assembly (86).
9. Steering column shaft assembly (55).

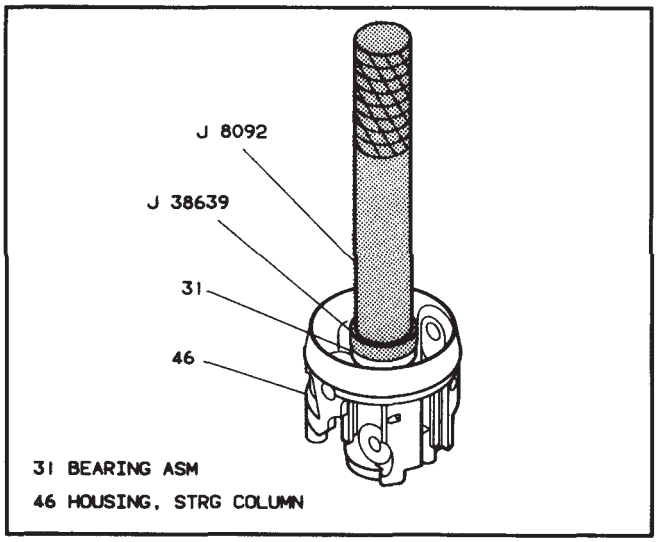

Figure 15 – Installing Bearings

Inspect

- Steering column shaft assembly (55) for accident damage. (See figure 30)

Important

- Mark upper shaft assembly (56) and lower steering shaft asm (59) to ensure proper assembly. Failure to assemble properly will cause steering wheel to be turned 180 degrees. (See figures 16 and 17)

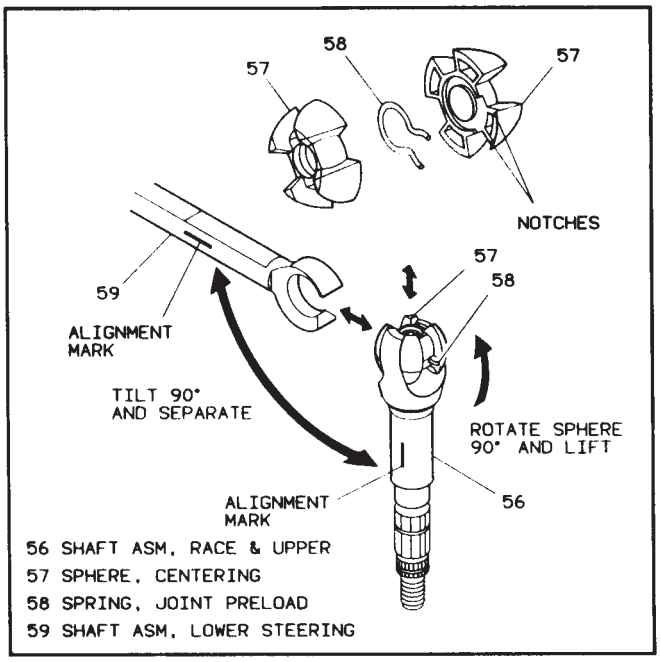

Figure 16 – Removing Steering Shaft Components

Important

- Remove only those components necessary to do repairs.

Disassemble

Steering Column Shaft Assembly

A) Upper shaft assembly (56), lower steering shaft assembly (59).
   - Tilt 90 degrees to each other and disengage.

B) Centering sphere (57) from upper shaft assembly (56).
   - Rotate sphere 90 degrees and slip out.

C) Joint preload spring (58) from centering sphere (57).

Assemble

Steering Column Shaft Assembly

A) Joint preload spring (58) to two centering sphere (57).

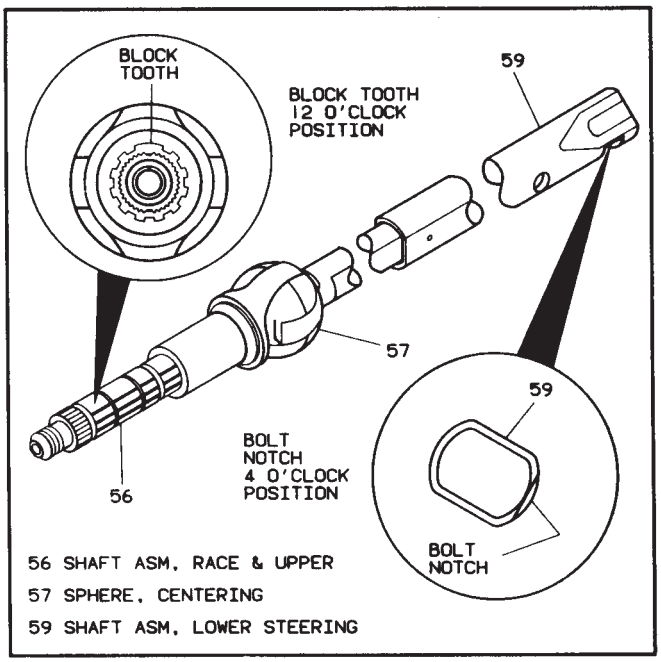

Figure 17 – Correct Upper to Lower Shaft Orientation

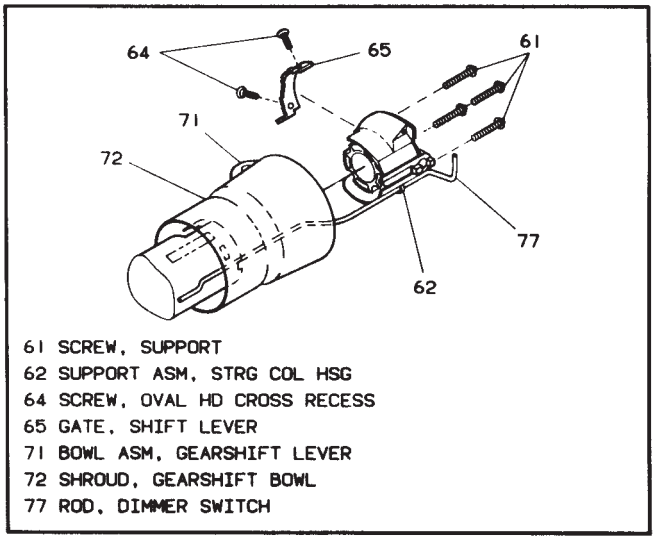

Figure 18 – Removing Column Housing Support

B) Centering sphere (57).

- Lubricate with lithium grease, slip into upper shaft assembly (56), and rotate sphere 90 degrees.

C) Upper shaft assembly (56) to lower steering shaft assembly (59).

- Line up marks and tilt assemblies 90 degrees to each other.

10. Support screws (61).
11. Column housing support assembly (62) with dimmer switch rod (77) from steering column jacket assembly (73).
    - Rod (77) from support (63).

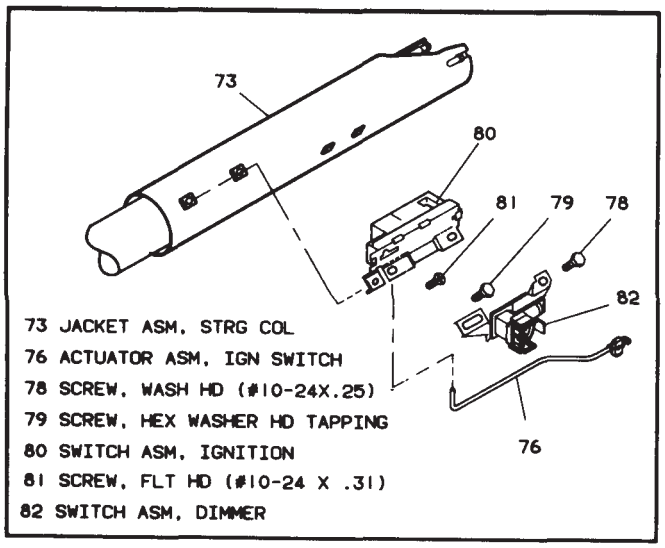

Figure 19 - Removing Ignition and Dimmer Switches

12. Oval hd cross recess screws (64) and shift lever gate (65) from support (63).
13. Hex head screw (79) and washer head screw (78).
14. Dimmer switch assembly (82).
15. Flat head screw (81).
16. Ignition switch assembly (80) with switch actuator assembly (76).
    - Switch actuator assembly (76) from ignition switch assembly (80).
17. Shift tube retaining ring (66).

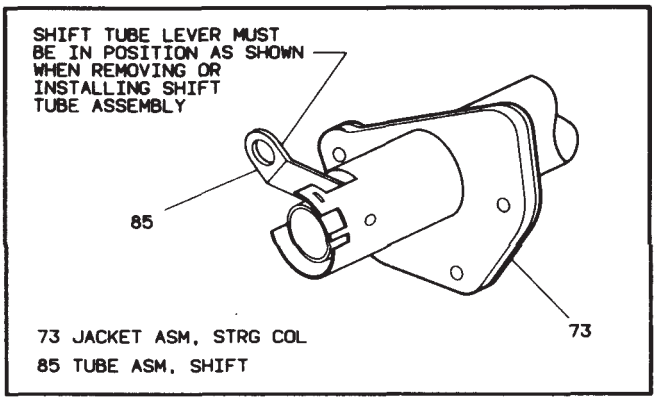

Figure 20 - Shift Tube Lever Position

NOTICE: Shift tube lever must be in position to clear jacket assembly (73) when removing shift tube (85). Forcing lever against jacket may cause damage to jacket assembly (73).

18. Thrust washer (67).
19. Shift tube (85) using J 23072.
20. Lock plate (68).
21. Wave washer (69).
22. Gearshift lever bowl (71) with gearshift bowl shroud (72).
    - Shift lever spring (70) from bowl (71).
    - Shroud (72) from bowl (71).

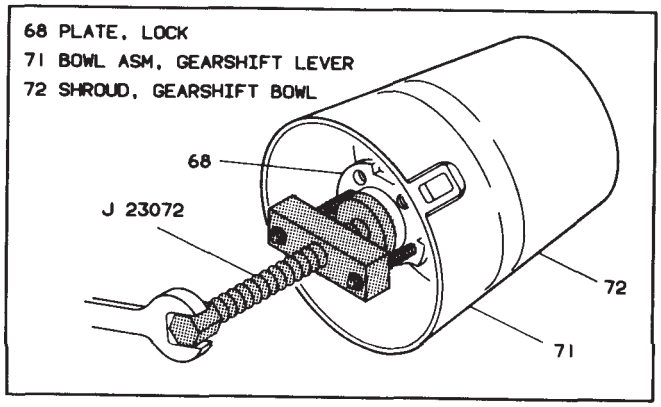

Figure 21 - Removing Shift Tube

Install or Connect

Figures 1,22 through 28

NOTICE: See "Notice" on page 3F2 -1 of this section.

NOTICE: Ensure all fasteners are securely seated before applying needed torque. Failure to do so may result in component damage or malfunctioning of steering column.

1. Bowl (71) to shroud (72).
2. Spring (70) to bowl (71).
3. Shroud (72) with bowl (71) to jacket (73).
4. Wave washer (69).
   - Lubricate with lithium grease.
5. Lock plate (68).

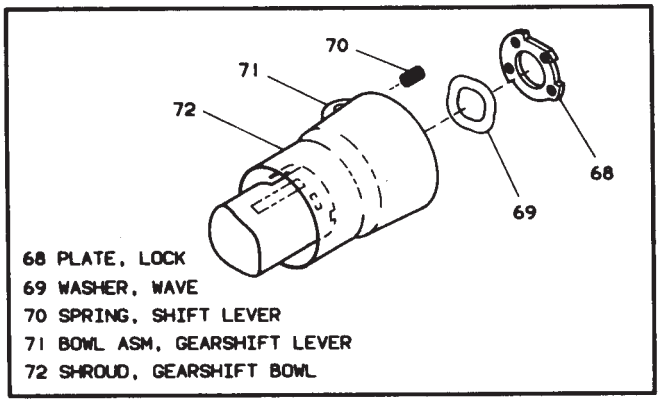

Figure 22 – Installing Lock Plate, Wave Washer

NOTICE: Shift tube lever must be in position to clear jacket assembly (73) when installing shift tube (85). Forcing lever against jacket may cause damage to jacket assembly (73).

6. Shift tube (85) using J 23073-01.

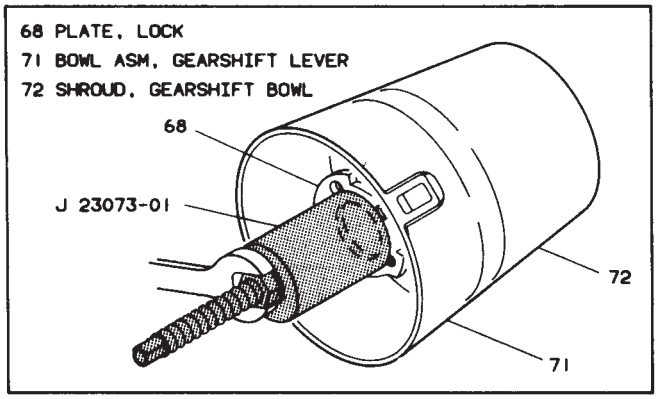

Figure 23 – Installing Shift Tube

7. Thrust washer (67).
8. Retaining ring (66).
9. Gate (65) and screws (64) to support (63).

Tighten

- Tighten screws (64) to 3.7 N·m (33 lb.in.).

10. Dimmer switch rod (77) to column housing support assembly (62).

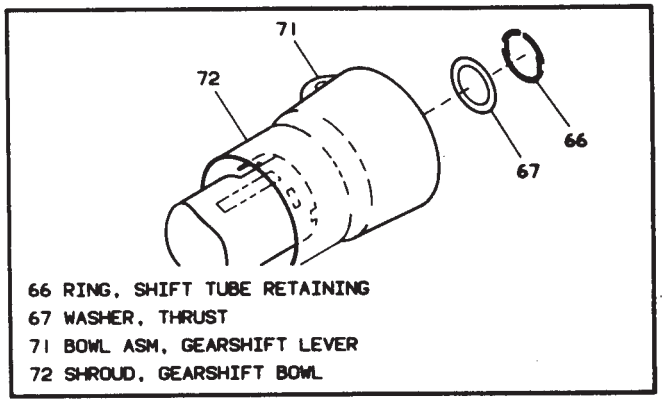

Figure 24 – Installing Shift Tube Retaining Ring, Thrust Washer

11. Support assembly (62) and screw (61).

Tighten

- Tighten screw (61) to 8.8 N·m (77 lb.in.).

12. Column shaft assembly (55) to jacket assembly (73).
    - Lubricate with lithium grease.
13. Tilt lever.
14. Steering column housing assembly (30) to column.
    A) Position column housing (30) and align switch actuator rack (44) with pin on end of ignition switch actuator assembly (76).
    B) Pull back on tilt lever, pushing column housing assembly (30) onto column housing support assembly (62).
    C) Release tilt lever to lock shoes (34) and (35) onto dowel pins.
    D) Remove tilt lever.
15. Pivot pins (39).
    A) Lubricate with lithium grease.
    B) Press pin until firmly seated, two places.

16. Adapter & bearing assembly (86).
    - Lubricate inner surface of bearing (86) with lithium grease.

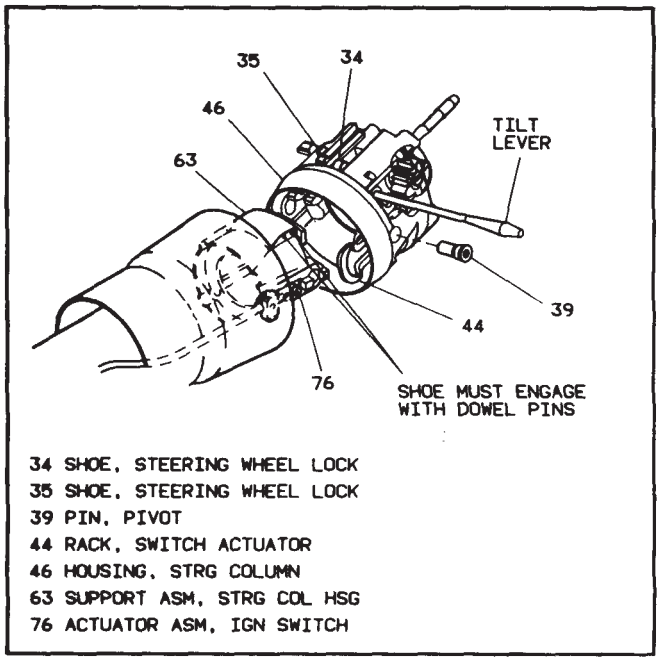

Figure 25 – Installing Column Housing to Housing Support

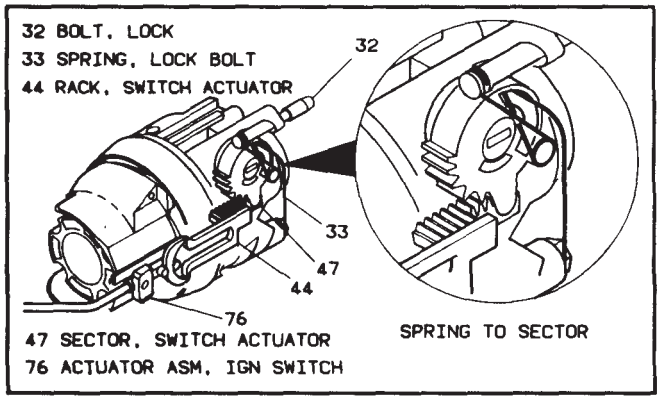

Figure 26 – Actuator Assembly to Actuator Rack Installed

17. Bearing adapter retainer (87).
18. Lower bearing adapter clip (88).

NOTICE: Install ignition switch (80) to jacket (73) with switch in "OFF-LOCK" position. (See figure 27) New ignition switch will be pinned in "OFF-LOCK" position. Remove plastic pin after switch is assembled to column. Failure to do so may cause switch damage.

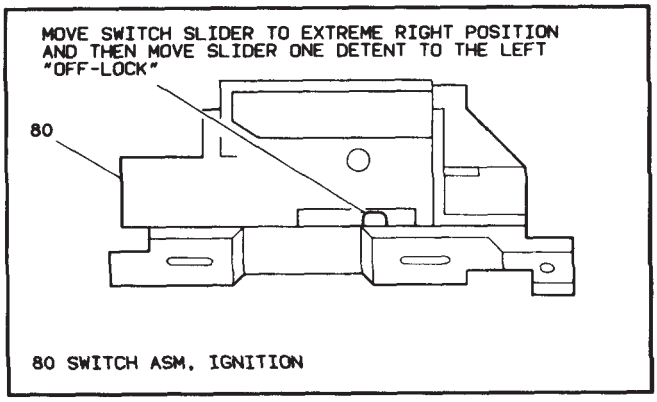

Figure 27 – Adjusting Ignition Switch

Adjust

- Ignition switch assembly (80). (See Figure 27)

  A) Move switch slider to extreme right position.
  B) Move switch slider one detent to left "OFF-LOCK" position.

19. Ignition switch assembly (80) and flat head screw (81).

Tighten

- Tighten screw (81) to 4.0 N·m (35 lb.in.).

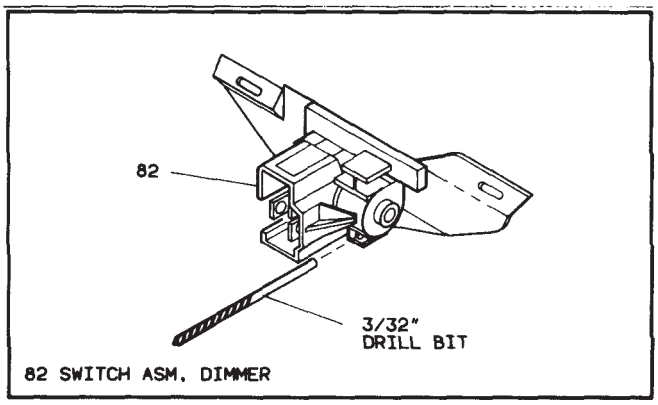

Figure 28 – Adjusting Dimmer Switch

20. Dimmer switch assembly (82).
21. Hex head screw (78) and washer head screw (79).
    - Tighten finger tight.

Adjust

- Dimmer switch (82). (See figure 28)

  A) Place a 3/32–inch drill bit in hole on switch to limit travel.
  B) Position switch on column and push against dimmer switch rod (77) to remove all lash.
  C) Remove drill bit.

Tighten

- Tighten screw (78) and screw (79) to 4.0 N·m (35 lb.in.).

22. Do all steps, "Install or Connect", Sub Section B.

SUB SECTION D – LOWER COLUMN

INCLUDES:
DIMMER SWITCH ASSEMBLY
DIMMER SWITCH ADJUSTMENT
IGNITION SWITCH ASSEMBLY
IGNITION SWITCH ADJUSTMENT
ADAPTER & BEARING ASSEMBLY

Dimmer Switch Assembly

Remove or Disconnect
Figures 1 and 19

1. Negative (–) battery cable.
2. Washer head screw (78).
3. Hex head screw (79).
4. Dimmer switch assembly (82).
    - Dimmer switch (82) from vehicle wire harness.

Install or Connect
Figures 1,19 and 28

NOTICE: See "Notice" on page 3F2 –1 of this section.

NOTICE: Ensure all fasteners are securely seated before applying required torque. Failure to do so may result in component damage or malfunctioning of steering column.

1. Dimmer switch assembly (82) to rod (77).
2. Hex head screw (79) and washer head screw (78).
    - Tighten finger tight.

Adjust

- Dimmer switch (82). (See figure 28)

  A) Place 3/32–inch drill bit in hole on switch to limit travel.
  B) Position switch on column and push against dimmer switch rod (77) to remove all lash.
  C) Remove drill bit.

Tighten

- Tighten screw (78) and screw (79) to 4.0 N·m (35 lb.in.).

3. Vehicle wire harness to dimmer switch (82).
4. Negative (–) battery cable.

Ignition Switch Assembly

Remove or Disconnect
Figures 1 and 19

1. Negative (–) battery cable.
2. Washer head screw (78).
3. Hex head screw (79).
4. Dimmer switch assembly (82) from rod (77).
5. Flat head screw (81).
6. Ignition switch assembly (80) from ignition switch actuator assembly (76).
    - Ignition switch (80) from vehicle wire harness.

Install or Connect
Figures 1,19,27 and 28

NOTICE: See "Notice" on page 3F2 -1 of this section.

NOTICE: Ensure all fasteners are securely seated before applying needed torque. Failure to do so may result in component damage or malfunctioning of steering column.

NOTICE: Install ignition switch (80) to jacket (73) with switch in "OFF-LOCK" position. (See figure 27) New ignition switch will be pinned in "OFF-LOCK" position. Remove plastic pin after switch is assembled to column. Failure to do so may cause switch damage.

Adjust

- Ignition switch assembly (80).
  A) Move switch slider to extreme right position.
  B) Move switch slider one detent to left "OFF-LOCK" position.

1. Ignition switch assembly (80) and flat head screw (81).

Tighten

- Tighten screw (81) to 4.0 N·m (35 lb.in.).

2. Dimmer switch assembly (82).
3. Hex head screw (79) and washer head screw (78).
   - Tighten finger tight.

Adjust

- Dimmer switch (82). (See figure 28)

  A) Place 3/32-inch drill bit in hole on switch to limit travel.
  B) Position switch on column and push against dimmer switch rod (77) to remove all lash.
  C) Remove drill bit.

Tighten

- Tighten screw (79) and screw (78) to 4.0 N·m (35 lb.in.).

4. Vehicle wire harness to ignition switch (80).
5. Negative (-) battery cable.

Adapter & Bearing Assembly

Remove or Disconnect
Figures 1,29 and 30

1. Negative (-) battery cable.
2. Steering column from vehicle.

NOTICE: Once steering column is removed from vehicle, the column is extremely susceptible to damage. Dropping steering column assembly on its end could collapse steering shaft or loosen plastic injections which maintain column rigidity. Leaning on steering column assembly could cause jacket to bend or deform. Any of the above damage could impair steering column's collapsible design. If it is necessary to remove steering wheel, use only the specified steering wheel puller. Under no conditions should the end of shaft be hammered on as hammering could loosen plastic injections which maintain steering column rigidity.

Inspect

- Steering column for accident damage. (See figure 30)

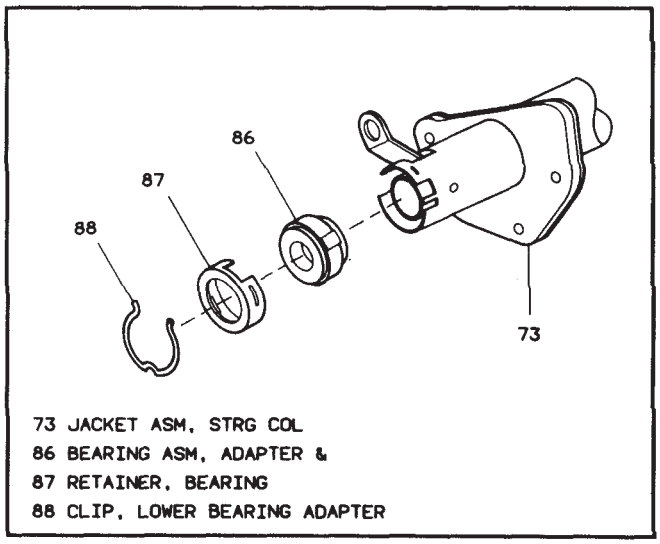

Figure 29 - Removing Adapter & Bearing Assembly

3. Lower bearing adapter clip (88).
4. Bearing adapter retainer (87).
5. Adapter & bearing assembly (86).

Install or Connect

Figures 1 and 29

NOTICE: See "Notice" on page 3F2 –1 of this section.

NOTICE: Ensure all fasteners are securely seated before applying needed torque. Failure to do so may result in component damage or malfunctioning of steering column.

1. Adapter & bearing assembly (86).
   - Lubricate inner surface of bearing (86) with lithium grease.
2. Bearing adapter retainer (87).
3. Lower bearing adapter clip (88).
4. Steering column to vehicle.
5. Negative (–) battery cable.

CHECKING STEERING COLUMN FOR ACCIDENT DAMAGE

NOTICE: Vehicles involved in accidents resulting in frame damage, major body or sheet metal damage, or where the steering column has been impacted may also have a damaged or misaligned steering column.

CHECKING PROCEDURE

JACKET ASM, STEERING COLUMN

- Check capsules on steering column bracket assembly; all should be within 1.59mm from the bottom of the slots (View A). If not, bracket should be replaced if bracket is bolted to the jacket asm or the jacket asm should be replaed if bracket is welded to jacket asm.
- Check contact surface "A" on capsules (View B). The bolt head must no contact surface "A" or shear load would be increased. If contact is made, replace bracket asm or jacket asm.
- Check for jacket asm collapse by measuring the distance from the lower edge of upper jacket to a defined point on the lower jacket (View E). If measured dimensions are not within specifications, a new jacket must be installed.

SHIFT TUBE ASM

- Visually inspect shift tube for sheared injected plastic (View C). If shift tube shows sheared plastic, a new shift tube must be installed.
- Check operation of shift lever. If you can move lever to "Park" position without raising lever, it is an indication that upper shift tube plastic bearing is broken.

STEERING SHAFT ASM

- Visually inspect steering shaft for sheared injected plastic (View D). If steering shaft shows sheared plastic, a new steering shaft must be installed.
- Any frame damage that could cause a bent steering shaft must have steering shaft runout checked in the following manner: Using a dial indicator at lower end of steering shaft, have steering wheel rotated. Runout must not exceed 1.59mm.

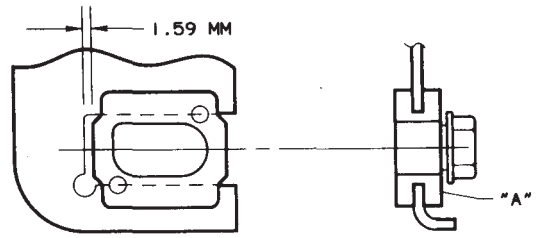

VIEW A (CAPSULES) VIEW B

CAPSULES MUST BE WITHIN 1.59 MM FROM BOTTOM OF SLOTS;

IF NOT, REPLACE BRACKET OR JACKET.

THE BOLT HEAD MUST NOT CONTACT SURFACE "A".

IF CONTACT IS MADE, THE CAPSULE SHEAR LOAD WILL BE INCREASED.

REPLACE BRACKET OR JACKET.

CHECK FOR SHEARED INJECTED PLASTIC AT THESE LOCATIONS.

VIEW C
(SHIFT TUBE)

CHECK FOR SHEARED INJECTED PLASTIC AT THESE LOCATIONS.

VIEW D
(STEERING SHAFT)

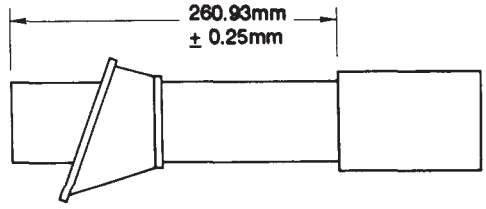

VIEW E (METHOD TO DETERMINE COLUMN COLLAPSE)
WITH LOWER BEARING REMOVED
MEASURE DISTANCE BETWEEN ARROWS.

Figure 30 – Checking Steering Column for Accident Damage

BLANK

UNIT REPAIR - FLOOR SHIFT

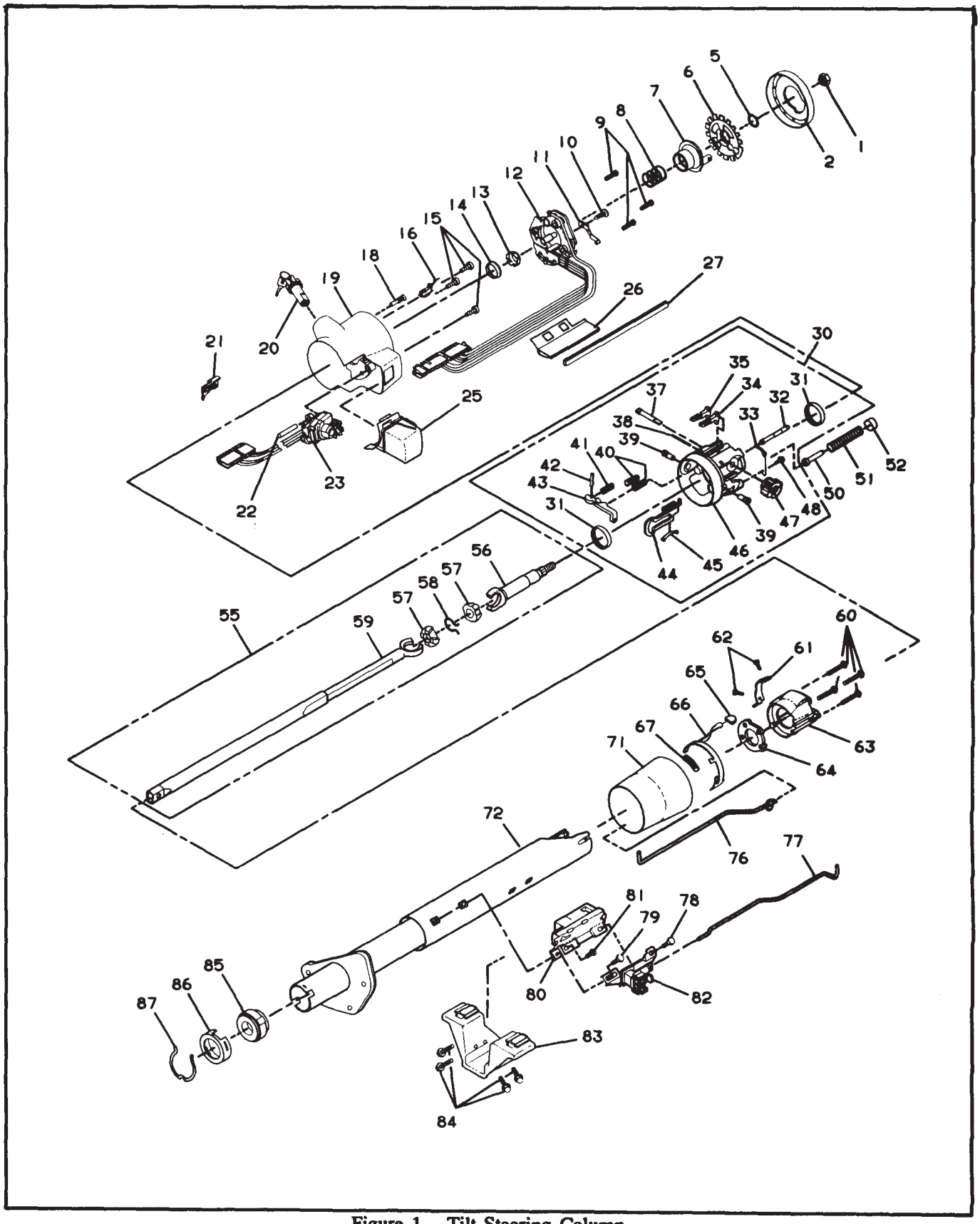

Figure 1 – Tilt Steering Column

1-NUT, HEX LOCKING (M14x1.5)
2-COVER, SHAFT LOCK
5-RING, RETAINING
6-LOCK, SHAFT
7-CAM ASM, TURN SIG CANCEL
8-SPRING, UPPER BEARING
9-SCREW, BNDG HD CR RECESS
10-SCREW, RD WASH HD (M4.2x1.41)
11-ARM, SIGNAL SWITCH
12-SWITCH ASM, TURN SIGNAL
13-SEAT, UPPER BRG INNER RACE
14-RACE, INNER
15-SCREW, PAN HD SOC TAP
16-SWITCH ASM, BUZZER
18-SCREW, LOCK RETAINING
19-COVER ASM, LOCK HOUSING
20-LOCK CYLINDER SET, STRG COL
21-ACTUATOR, DIMMER SW ROD
22-PIN, SWITCH ACTUATOR PIVOT
23-SWITCH ASM, PIVOT & (PULSE)
25-CAP, COL HSG COVER END
26-PROTECTOR, WIRING
27-PROTECTOR, WIRING
30-HOUSING ASM, STRG COLUMN
31-BEARING ASM
32-BOLT ASM, SHAFT LOCK
33-SPRING, LOCK BOLT
34-SHOE, STEERING WHEEL LOCK
35-SHOE, STEERING WHEEL LOCK
37-SHAFT, DRIVE
38-PIN, DOWEL
39-PIN, PIVOT
40-SPRING, SHOE
41-SPRING, RELEASE LEVER
42-PIN, RELEASE LEVER
43-LEVER, SHOE RELEASE
44-RACK, SWITCH ACTUATOR
45-SPRING, RACK PRELOAD
46-HOUSING, STRG COLUMN
47-SECTOR, SWITCH ACTUATOR
48-SCREW, HEX WASHER HEAD
50-GUIDE, SPRING
51-SPRING, WHEEL TILT
52-RETAINER, SPRING
55-SHAFT ASM, STEERING
56-SHAFT ASM, RACE & UPPER
57-SPHERE, CENTERING
58-SPRING, JOINT PRELOAD
59-SHAFT ASM, LOWER STEERING
60-SCREW, SUPPORT
61-PLATE, SHROUD RETAINING
62-SCREW, OVL HD CROSS RECESS
63-SUPPORT ASM, STRG COL HSG
64-PLATE, LOCK
65-PAD, RELEASE LEVER FINGER
66-LEVER, KEY RELEASE
67-SPRING, KEY RELEASE
71-SHROUD, STRG COL HOUSING
72-JACKET ASM, STRG COL
76-ACTUATOR ASM, SWITCH
77-ROD, DIMMER SWITCH
78-SCREW, WASH HD (#10-24x.25)
79-SCREW, HEX WASHER HD TAPPING
80-SWITCH ASM, IGNITION
81-SCREW, FLT HD (#10-24 x .31)
82-SWITCH ASM, DIMMER
83-BRACKET ASM, STRG COL SUPT
84-BOLT, FLGD HEX HD (M8X1.25)
85-BEARING ASM, ADAPTER &
86-RETAINER, BEARING
87-CLIP, LOWER BEARING ADAPTER

Service Kits

201-RACK SERV KIT, COL SECTOR &
-INCLUDES: 14,31,33,44,47,48
202-SPRING SERV KIT, TILT COLUMN
-INCLUDES: 13,14,39,50,51,52
203-COVER & SCR SERV KIT, LOCK HSG
-INCLUDES: 18,19
204-SPHERE SERV KIT, TILT COLUMN
-INCLUDES: 57,58
205-GREASE SERV KIT, (SYNTHETIC)

Figure 2 – Tilt Steering Column – Legend

SUB SECTION A - UPPER COLUMN

INCLUDES:
- SHAFT LOCK
- TURN SIGNAL CANCELLING CAM ASM
- UPPER BEARING SPRING
- UPPER BEARING INNER RACE SEAT
- INNER RACE
- TURN SIGNAL SWITCH ASSEMBLY
- BUZZER SWITCH ASSEMBLY
- STRG COL LOCK CYLINDER SET

Tools Required:
J 23653-C Lock Plate Compressor

Important

- Before doing any service procedures in this section, removal Steering Wheel is needed.

Remove or Disconnect
Figures 1 through 6

1. Negative (-) battery cable.

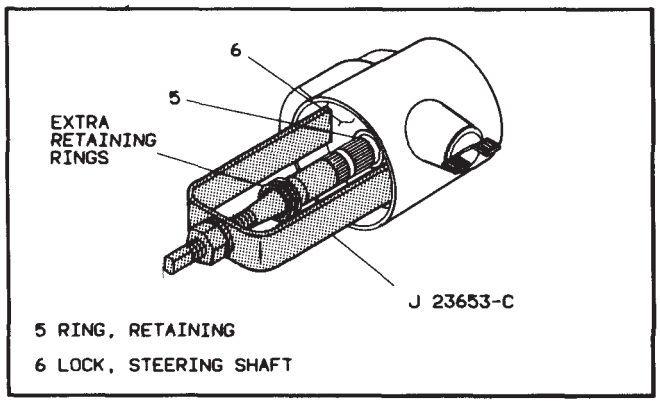

Figure 3 - Removing Shaft Lock Retaining Ring

2. Shaft lock cover (2).
3. Shaft lock retaining ring (5) using J 23653-C to push down shaft lock (6).
   - Dispose of ring (5).

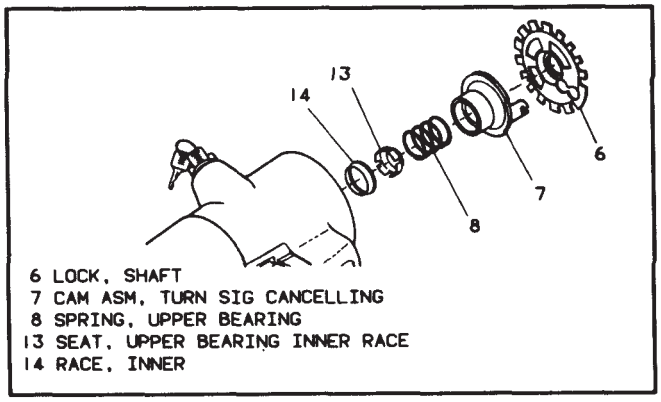

Figure 4 - Removing Components from Upper Shaft

4. Shaft lock (6).
5. Turn signal cancelling cam assembly (7).
6. Upper bearing spring (8).
7. Upper bearing inner race seat (13).
8. Inner race (14).
9. Turn signal to "RIGHT TURN" position (up).
10. Multi-function lever and hazard knob assembly.

11. Screw (10) and signal switch arm (11).
12. Turn signal switch screws (9).

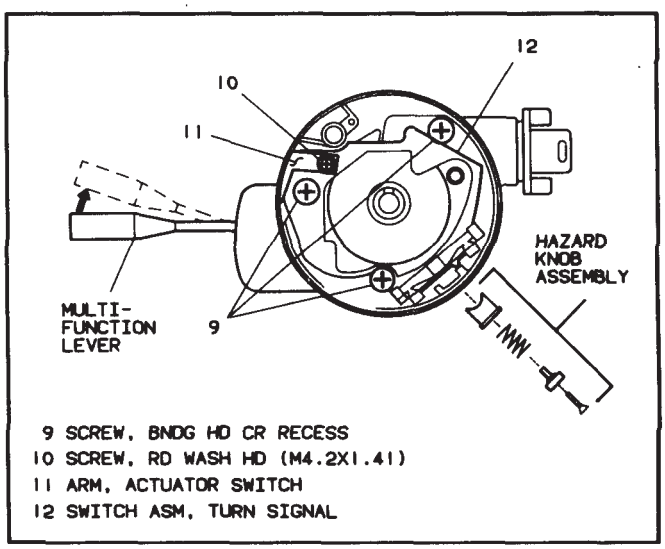

Figure 5 - Turn Signal Switch Removal Preparation

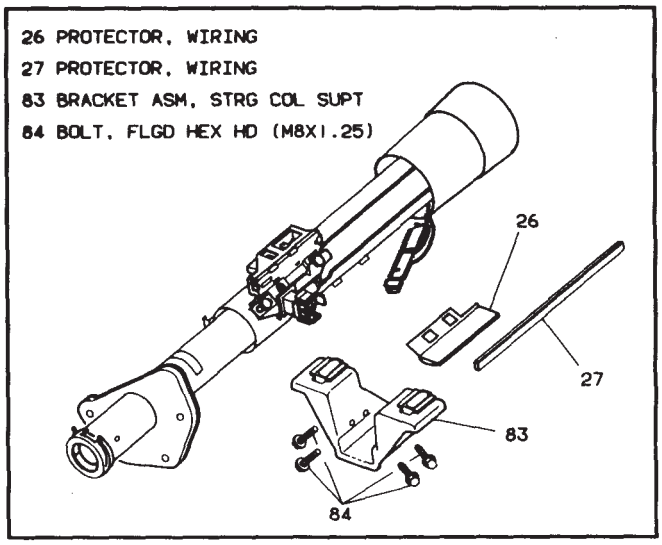

Figure 6 – Removing Turn Signal Switch

13. Turn signal switch assembly (12).
    - Let switch hang freely if removal is not needed.
    - To remove switch (12):

      A) Hex head bolts (84).
      B) Steering column support bracket assembly (83).
      C) Turn signal switch connector from vehicle wire harness.
      D) Wiring protectors (26) and (27).
      E) Gently pull wire harness through column.

14. Key from steering column lock cylinder set (20).
15. Buzzer switch assembly (16).
16. Reinsert key in lock cylinder (20).
    - Key in "LOCK" position.

17. Lock retaining screw (18).
18. Lock cylinder (20).

Install or Connect

Figures 1 and 7

NOTICE: See "Notice" on page 3F2 -1 of this section.

NOTICE: Ensure all fasteners are securely seated before applying needed torque. Failure to do may result in component damage or malfunctioning of steering column.

1. Lock cylinder (20).
2. Lock retaining screw (18).

Tighten

- Tighten screw (18) to 2.5 N·m (22 lb.in.).

3. Key from lock cylinder set (20).
4. Buzzer switch assembly (16).
5. Reinsert key in lock cylinder set (20).
    - Key in "LOCK" position.

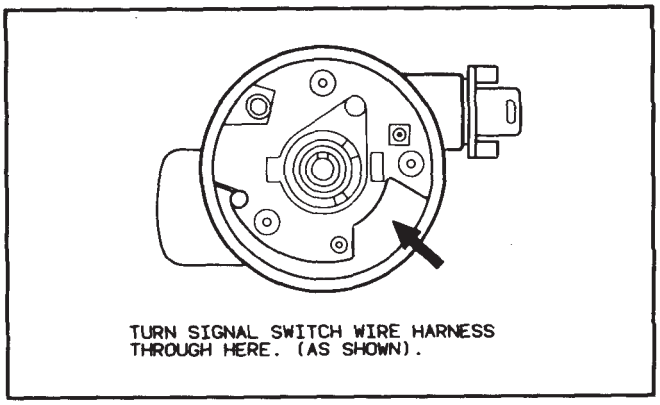

Figure 7 – Wire Harnesses through Column

6. Turn signal switch assembly (12) wire harness through steering column.
    A) Let switch hang freely.
    B) Switch connector to vehicle wire harness.
    C) Wiring protector (26).
    D) Support bracket (83).
    E) Hex head bolts (84).

Tighten

- Tighten bolts (84) to 30.0 N·m (22 lb.ft.)

7. Turn signal switch assembly (12) and screws (9).

Tighten

- Tighten screws (9) to 3.4 N·m (30 lb.in.).

8. Signal switch arm (11) and screw (10).

Tighten

- Tighten screws (10) to 2.3 N·m (20 lb.in.).

9. Hazard knob assembly and multi-function lever.

10. Inner race (14).
11. Upper bearing inner race seat (13).
12. Upper bearing spring (8).
13. Turn signal cancelling cam assembly (7).
    - Lubricate with grease, synthetic (service kit).

14. Shaft lock (6).
15. New shaft lock retaining ring (5) using J 23653-C to push down shaft lock (6).
    - Ring (5) must be firmly seated in groove on shaft.

16. Shaft lock cover (2).

NOTICE: Gently pull lower turn signal wires to remove any wire kinks that may be inside steering column assembly. Failure to do so may cause damage to wire harness.

17. Steering column to vehicle.

18. Negative (-) battery cable.

SUB SECTION B - HOUSING COVER

Figures 1 through 11

INCLUDES:

LOCK HOUSING COVER ASSEMBLY
COLUMN HSG COVER END CAP
PIVOT & (PULSE) SWITCH ASSEMBLY
DIMMER SWITCH ROD ACTUATOR
TILT SPRING ASSEMBLY

Tools Required:
J 23653-C Lock Plate Compressor

Important

- Before doing any service procedures in this section, removal of Steering Wheel is needed.

Important

- Remove only those components necessary to do repairs.

Remove or Disconnect

1. Do all steps, "Remove or Disconnect", Sub Section A.
2. Cover screws (15).
3. Tilt lever.
4. Lock housing cover assembly (19).
5. Column housing cover end cap (25) with dimmer switch rod actuator (21).
6. Switch actuator pivot pin (22).

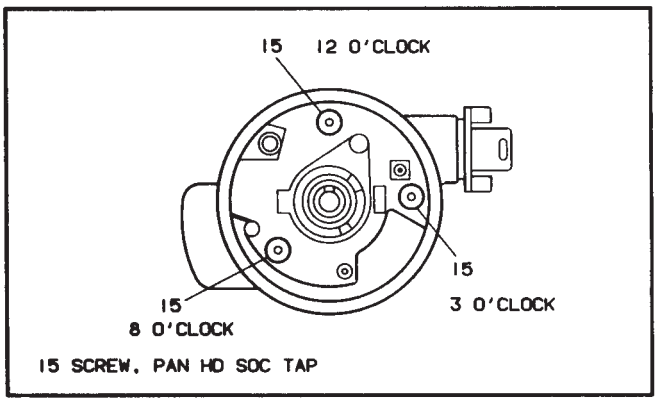

Figure 8 - Lock Housing Cover Screw Positions

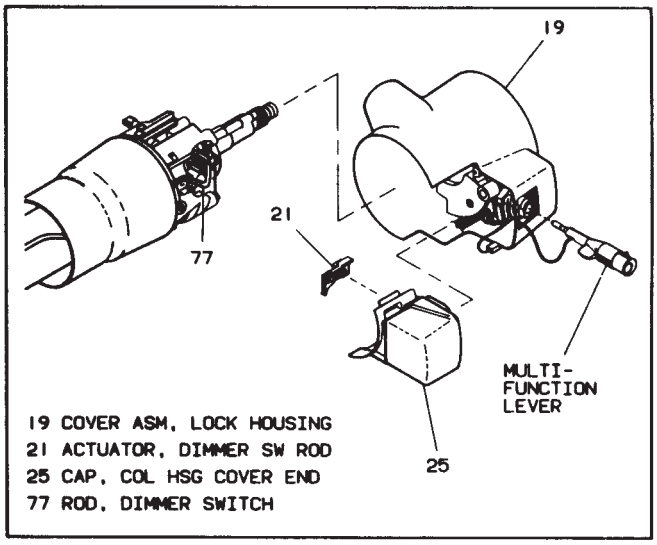

Figure 9 - Removing Lock Housing Cover

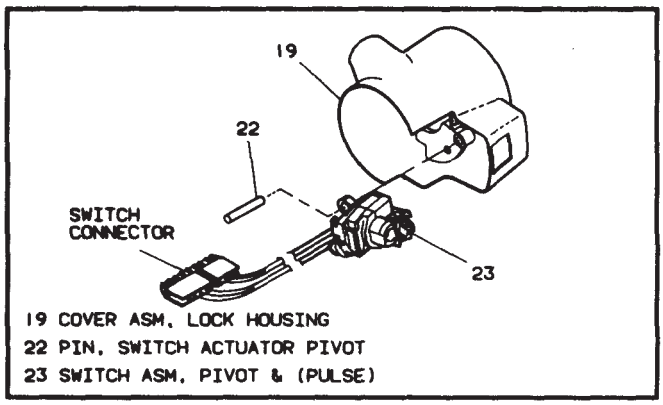

Figure 10 – Removing Pivot & (Pulse) Switch

7. Pivot & (pulse) switch assembly (23).
   - Let switch hang freely if removal is not needed.
   - To remove switch (23):

     A) Pivot & (pulse) switch connector from vehicle wire harness.
     B) Gently pull wire harness through column.

8. Spring retainer (52).
   - Using a cross recess head screwdriver, push retainer down and turn counterclockwise to release.

9. Spring (51) and spring guide (50).

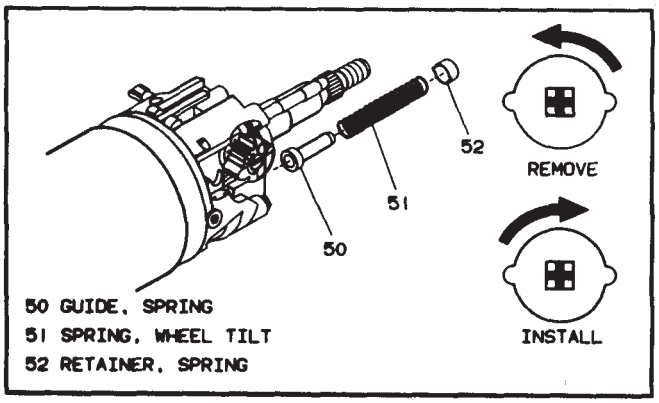

Figure 11 – Removing Tilt Spring Assembly

Install or Connect

NOTICE: See "Notice" on page 3F2 –1 of this section.

NOTICE: Ensure all fasteners are securely seated before applying needed torque. Failure to do so may result in component damage or malfunctioning of steering column.

1. Spring guide (50) and spring (51).
   - Lubricate with lithium grease.

2. Spring retainer (52).
   - Using a cross recess screwdriver push retainer down and turn clockwise to lock in place.

3. Pivot & (pulse) switch assembly (23) to lock housing cover assembly (19).
4. Switch actuator pivot pin (22) to switch (23) and cover (19).
5. Pivot & (pulse) switch wire harness through steering column.
   - Switch connector to vehicle wire harness.

6. Dimmer switch rod actuator (21) to column housing cover end cap (25).
   - Lubricate with lithium grease.

7. End cap (25) to lock housing cover assembly (19).
   - Bottom edge of dimmer switch rod actuator (21) should rest on bend in dimmer switch rod (77).

8. Lock housing cover assembly (19).
9. Screws (15). Tighten screw in 12 o'clock position first, screw in 8 o'clock position second, and screw in 3 o'clock position third.

Tighten

- Tighten screws (15) in same order to 9.0 N·m (80 lb.in.).

10. Do all steps, "Install or Connect", Sub Section A.

SUB SECTION C – MID COLUMN

INCLUDES:

TURN SIGNAL SWITCH ASSEMBLY
STEERING COLUMN HOUSING ASM
STEERING WHEEL LOCK SHOE
SWITCH ACTUATOR SECTOR
SWITCH ACTUATOR RACK
BEARING ASSEMBLY
LOCK BOLT
STEERING SHAFT ASSEMBLY
STEERING COL HSG SUPPORT ASM
KEY RELEASE LEVER

Tools Required:
- J 23653-C Lock Plate Compressor
- J 21854-01 Pivot Pin Remover
- J 22635 Lock Shoe and Release Lever Pin Remover and Installer
- J 8092 Driver Handle
- J 38639 Strg Col Housing Bearing Installer

Important

- Before doing any service procedures in this section, removal of Steering Wheel is needed.

Remove or Disconnect
Figures 1 through 19, 21 and 25

1. Negative (-) battery cable.
2. Steering column from vehicle.

NOTICE: Once steering column is removed from vehicle, the column is extremely susceptible to damage. Dropping steering column assembly on its end could collapse steering shaft or loosen plastic injections which maintain column rigidity. Leaning on steering column assembly could cause jacket to bend or deform. Any of the above damage could impair steering column's collapsible design. If it is necessary to remove steering wheel, use only the specified steering wheel puller. Under no conditions should the end of shaft be hammered on as hammering could loosen plastic injections which maintain steering column rigidity.

Inspect

- Steering column for accident damage. (See Figure 25)

3. Do all steps, "Remove or Disconnect", Sub Section B.

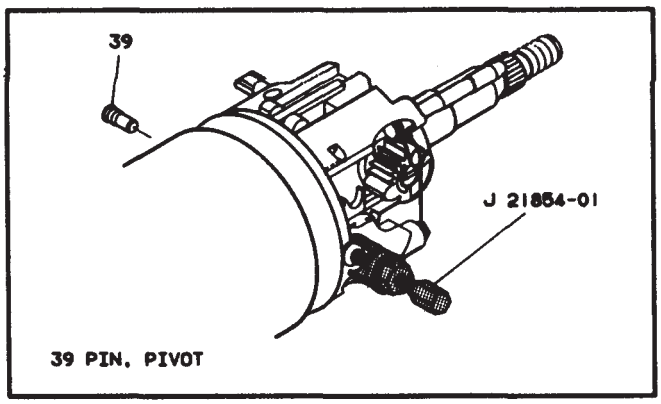

Figure 12 - Removing Pivot Pin

4. Pivot pins (39) using J 21854-01.
   - Reinstall tilt lever.
5. Steering column housing assembly (30).
   - Pull back on tilt lever and pull steering column housing assembly (30) down and away from column.

Important

- Remove only those components necessary to do repairs.

Disassemble

Steering Column Housing Assembly

A) Bearing assembly (31).
B) Hex head screw (48).
C) Lock bolt spring (33).
D) Lock bolt (32).
E) Switch actuator rack (44) and rack preload spring (45).
F) Drive shaft (37).
G) Switch actuator sector (47).
H) Release lever pin (42) using J 22635.
I) Shoe release lever (43).

J) Release lever spring (41).
K) Dowel pin (38) using J 22635.
L) Lock shoes (34) and (35).
M) Shoe springs (40).

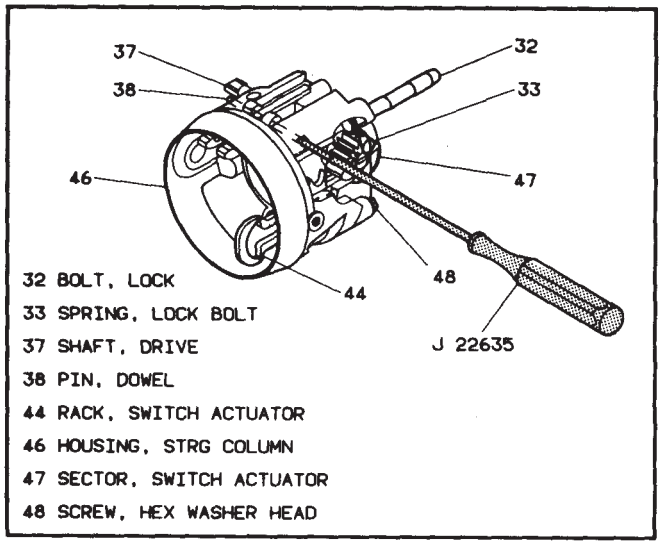

Figure 13 – Lock Housing Cover Components, Exterior

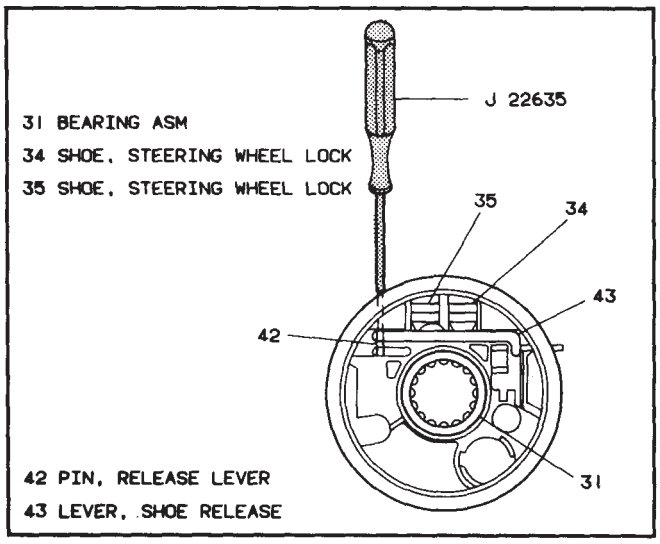

Figure 14 – Lock Housing Cover Components, Interior

Assemble

Steering Column Housing Assembly

A) Shoe springs (40).
B) Lock shoes (34) and (35).
C) Dowel pin (38) using J 22635.
D) Release lever spring (41).
E) Shoe release lever (43).
F) Release lever pin (42) using J 22635.
G) Switch actuator sector (47).
H) Drive shaft (37).
I) Rack preload spring (45).
J) Switch actuator rack (44) to actuator sector (47).
K) Bearing assembly (31) lubricated with lithium grease to column housing (46) using J 38639 and J 8092.
L) Lock bolt (32).
M) Lock bolt spring (33). (Refer to figure 21)
N) Hex head screw (48).

Tighten

- Tighten screw (48) to 4.0 N·m (35 lb.in.).

6. Lower bearing adapter clip (87).
7. Bearing adapter retainer (86).
8. Adapter & bearing assembly (85).
9. Steering column shaft assembly (55).

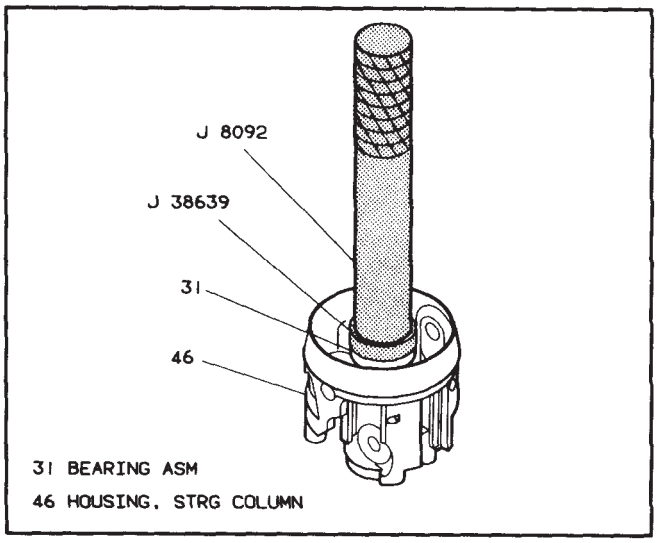

Figure 15 – Installing Bearings

Inspect

- Steering column shaft assembly (55) for accident damage. (See Figure 25)

Important

- Mark upper shaft assembly (56) and lower steering shaft assembly (59) to ensure proper assembly. Failure to assemble properly will cause steering wheel to be turned 180 degrees. (See Figures 16 and 17)

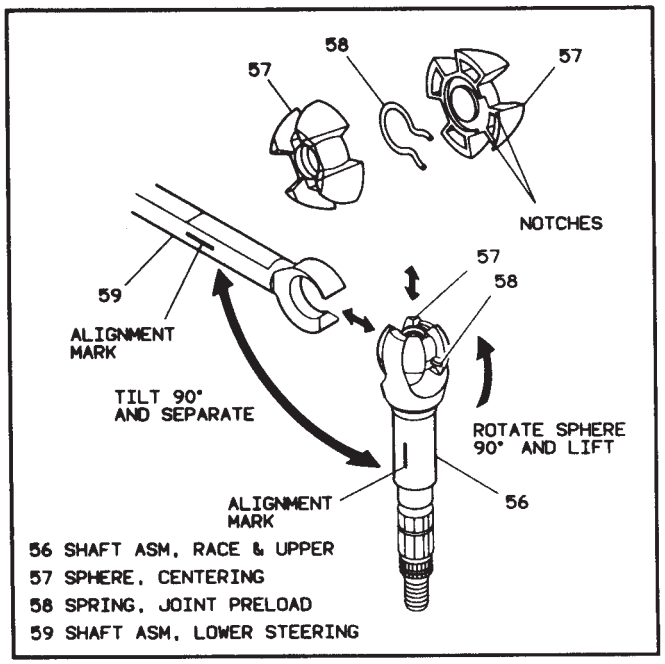

Figure 16 – Removing Steering Shaft Components

Important

- Remove only those components necessary to do repairs.

Disassemble

Steering Column Shaft Assembly

A) Upper shaft assembly (56), lower steering shaft assembly (59).
   - Tilt 90 degrees to each other and disengage.

B) Centering sphere (57) from upper shaft assembly (56).
   - Rotate sphere 90 degrees and slip out.

C) Joint preload spring (58) from centering sphere (57).

Assemble

Steering Column Shaft Assembly

A) Joint preload spring (58) to two centering sphere (57).

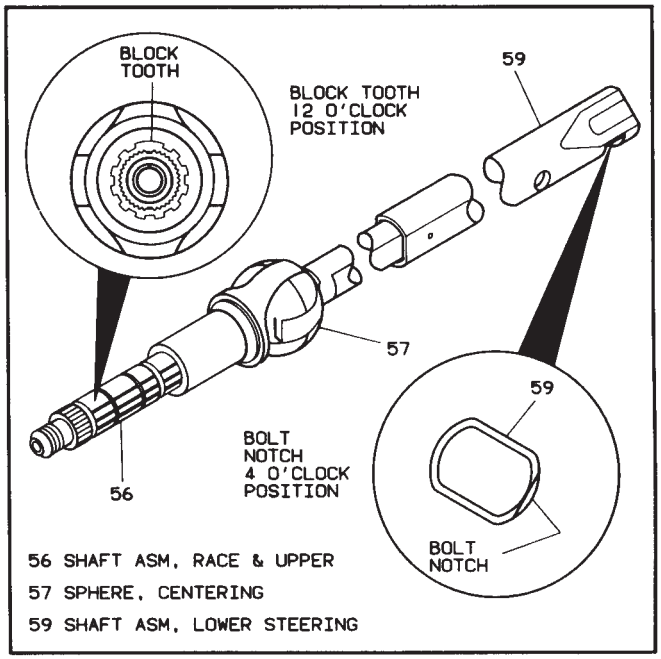

Figure 17 – Correct Upper to Lower Shaft Orientation

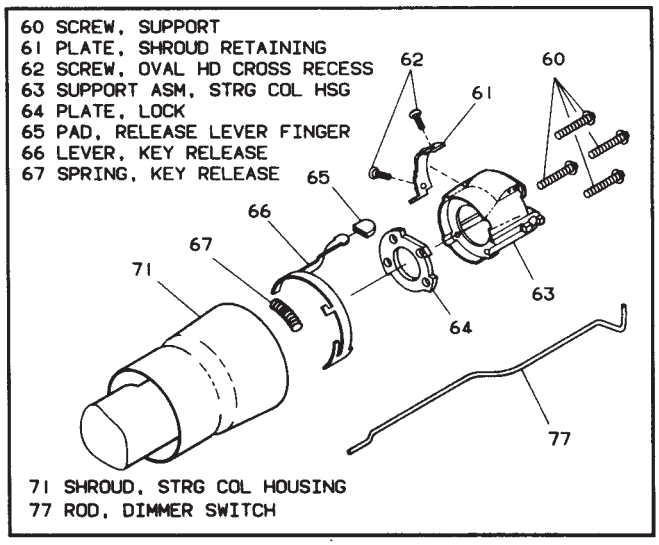

Figure 18 – Removing Column Housing Support

B) Centering sphere (57).
- Lubricate with lithium grease, slip into upper shaft assembly (56), and rotate sphere 90 degrees.

C) Upper shaft assembly (56) to lower steering shaft assembly (59).
- Line up marks and tilt assemblies 90 degrees to each other.

10. Support screws (60).
11. Column housing support assembly (63) with dimmer switch rod (77) from steering column jacket assembly (72).
    - Rod (77) from support (63).
    - Two cross recess screws (62) are shroud retaining plate (61).

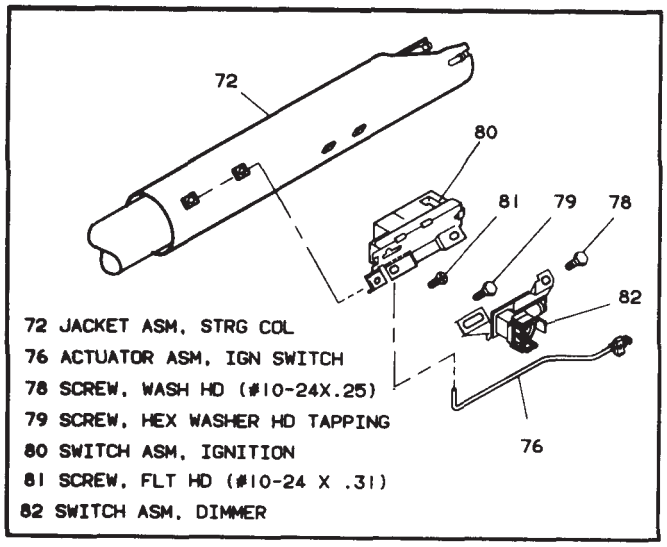

Figure 19 – Removing Ignition and Dimmer Switches

12. Lock plate (64).
13. Key release lever (66) with key release spring (67) from steering column housing shroud (71).
    - Spring (67) from lever (66).
    - Release lever finger pad (65) from lever (66).
14. Steering column housing shroud (71).
15. Hex head screw (79) and washer head screw (78).
16. Dimmer switch assembly (82).
17. Flat head screw (81).
18. Ignition switch assembly (80) with switch actuator assembly (76).
    - Switch actuator assembly (76) from switch assembly (80).

Install or Connect

Figures 1,20 through 22

NOTICE: See "Notice" on page 3F2 –1 of this section.

NOTICE: Ensure all fasteners are securely seated before applying needed torque. Failure to do so may result in component damage or malfunctioning of steering column.

1. Shroud (71) to jacket (72).
2. Release lever finger pad (65) to key release lever (66).
    - Key release spring (67) to lever (66).
3. Key release lever (66) with spring (67) and pad (65) to steering column housing shroud (71).
4. Dimmer switch rod (77) to column housing support assembly (62).
    - Shroud retaining plate (61).
    - Two screws (62).

Tighten

- Tighten screws (62) to 3.7 N·m (33 lb.in.).

5. Support assembly (63) and screws (60).
6. Actuator assembly (76) to groove in housing support assembly (63).
7. Column shaft assembly (55) to jacket assembly (72).
    - Lubricate with lithium grease.
8. Tilt lever.
9. Steering column housing assembly (30) to column.
    - Position column housing (30) and align switch actuator rack (44) with pin on end of ignition switch actuator assembly (76).
    - Pull back on tilt lever, pushing column housing assembly (30) onto column housing support assembly (63).
    - Release tilt lever to lock shoes (34) and (35) onto dowel pins.
    - Remove tilt lever.
10. Pivot pins (39).
    - Lubricate with lithium grease.
    - Press pin until firmly seated, two places.

11. Adapter & bearing assembly (85).
    - Lubricate inner surface of bearing (85) with lithium grease.

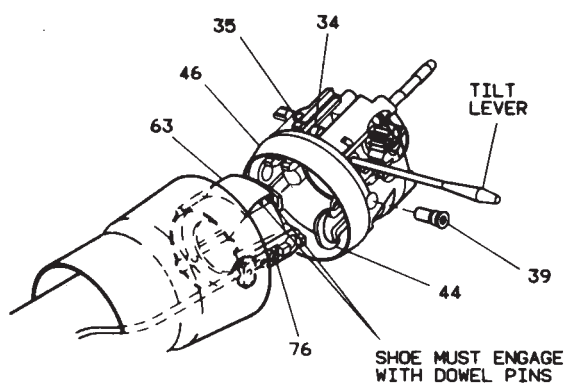

34 SHOE, STEERING WHEEL LOCK
35 SHOE, STEERING WHEEL LOCK
39 PIN, PIVOT
44 RACK, SWITCH ACTUATOR
46 HOUSING, STRG COLUMN
63 SUPPORT ASM, STRG COL HSG
76 ACTUATOR ASM, IGN SWITCH

Figure 20 – Installing Column Housing to Housing Support

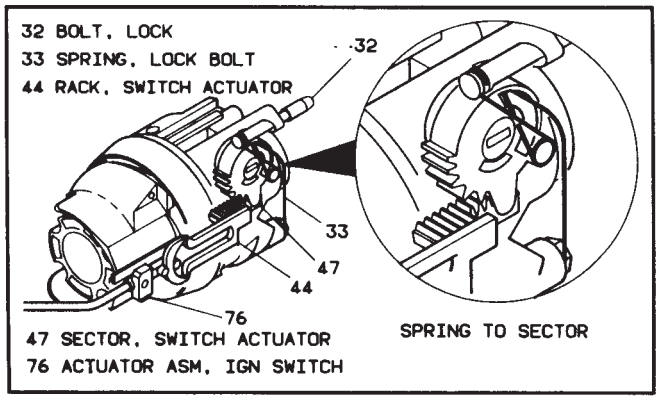

Figure 21 – Actuator Assembly to Actuator Rack Installed

12. Bearing adapter retainer (86).
13. Lower bearing adapter clip (87).

NOTICE: Install ignition switch (80) to jacket (72) with switch in "OFF-LOCK" position. (See Figure 22) New ignition switch will be pinned in "OFF-LOCK" position. Remove plastic pin after switch is assembled to column. Failure to do so may cause switch damage.

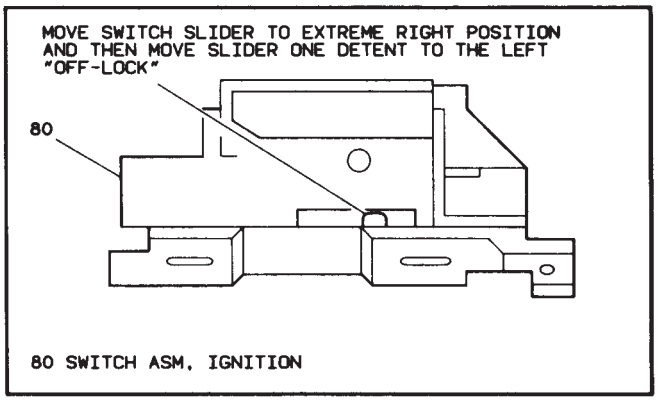

Figure 22 – Adjusting Ignition Switch

Adjust

- Ignition switch assembly (80). (See figure 22)
  - A) Move switch slider to extreme right position.
  - B) Move switch slider one detent to left "OFF-LOCK" position.

14. Ignition switch asm (80) and flat head screw (81).

Tighten

- Tighten screw (81) to 4.0 N·m (35 lb.in.).

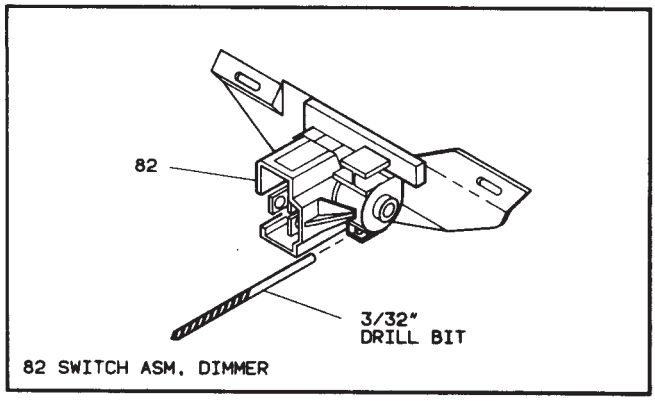

Figure 23 – Adjusting Dimmer Switch

15. Dimmer switch assembly (82).
16. Hex head screw (78) and washer head screw (79).
    - Tighten finger tight.

Adjust

- Dimmer switch (82). (See figure 23)

  A) Place a 3/32-inch drill bit in hole on switch to limit travel.
  B) Position switch on column and push against dimmer switch rod (77) to remove all lash.
  C) Remove drill bit.

Tighten

- Tighten screws (78) and (79) to 4.0 N·m (35 lb.in.).

17. Do all steps, "Install or Connect", Sub Section B.

SUB SECTION D – LOWER COLUMN

INCLUDES:
DIMMER SWITCH ASSEMBLY
DIMMER SWITCH ADJUSTMENT
IGNITION SWITCH ASSEMBLY
IGNITION SWITCH ADJUSTMENT
ADAPTER & BEARING ASSEMBLY

Dimmer Switch Assembly

Remove or Disconnect
Figures 1 and 19

1. Negative (–) battery cable.
2. Washer head screw (78).
3. Hex head screw (79).
4. Dimmer switch assembly (82).
    - Dimmer switch (82) from vehicle wire harness.

Install or Connect
Figures 1,19 and 23

NOTICE: See "Notice" on page 3F2 –1 of this section.

NOTICE: Ensure all fasteners are securely seated before applying required torque. Failure to do so may result in component damage or malfunctioning of steering column.

1. Dimmer switch assembly (82) to rod (77).
2. Hex head screw (79) and washer head screw (78).
    - Tighten finger tight.

Adjust

- Dimmer switch (82). (See figure 23)

  A) Place 3/32-inch drill bit in hole on switch to limit travel.
  B) Position switch on column and push against dimmer switch rod (77) to remove all lash.
  C) Remove drill bit.

Tighten

- Tighten screw (78) and screw (79) to 4.0 N·m (35 lb.in.).

3. Vehicle wire harness to dimmer switch (82).
4. Negative (–) battery cable.

Ignition Switch Assembly

Remove or Disconnect
Figures 1 and 19

1. Negative (–) battery cable.
2. Washer head screw (78).
3. Hex head screw (79).
4. Dimmer switch assembly (82) from rod (77).
5. Flat head screw (81).
6. Ignition switch assembly (80) from ignition switch actuator assembly (76).
    - Ignition switch (80) from vehicle wire harness.

Install or Connect
Figures 1,19,22 and 23

NOTICE: See "Notice" on page 3F2 -1 of this section.

NOTICE: Ensure all fasteners are securely seated before applying needed torque. Failure to do so may result in component damage or malfunctioning of steering column.

NOTICE: Install ignition switch (80) to jacket (72) with switch in "OFF-LOCK" position. (See Figure 22) New ignition switch will be pinned in "OFF-LOCK" position. Remove plastic pin after switch is assembled to column. Failure to do so may cause switch damage.

Adjust

- Ignition switch assembly (80). (See Figure 22)

  A) Move switch slider to extreme right position.
  B) Move switch slider one detent to left "OFF-LOCK" position.

1. Ignition switch assembly (80) and flat head screw (81).

Tighten

- Tighten screw (81) to 4.0 N·m (35 lb.in.).

2. Dimmer switch assembly (82).
3. Hex head screw (79) and washer head screw (78).
   - Tighten finger tight.

Adjust

- Dimmer switch (82). (See Figure 23)

  A) Place 3/32-inch drill bit in hole on switch to limit travel.
  B) Position switch on column and push against dimmer switch rod (77) to remove all lash.
  C) Remove drill bit.

Tighten

- Tighten screw (79) and screw (78) to 4.0 N·m (35 lb.in.).

4. Vehicle wire harness to ignition switch (80).
5. Negative (-) battery cable.

Adapter & Bearing Assembly

Remove or Disconnect
Figures 1,24 and 25

1. Negative (-) battery cable.
2. Steering column from vehicle.

NOTICE: Once steering column is removed from vehicle, the column is extremely susceptible to damage. Dropping steering column assembly on its end could collapse steering shaft or loosen plastic injections which maintain column rigidity. Leaning on steering column assembly could cause jacket to bend or deform. Any of the above damage could impair steering column's collapsible design. If it is necessary to remove steering wheel, use only the specified steering wheel puller. Under no conditions should the end of shaft be hammered on as hammering could loosen plastic injections which maintain steering column rigidity.

Inspect

- Steering column for accident damage. (See Figure 25)

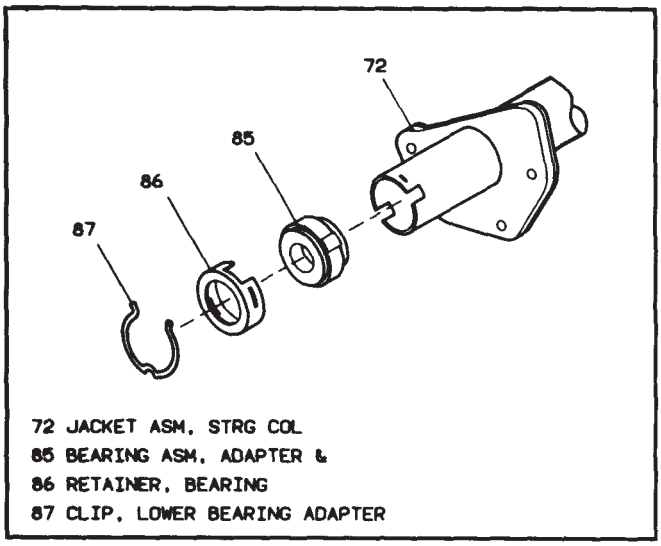

Figure 24 – Removing Adapter & Bearing Assembly

3. Lower bearing adapter clip (87).
4. Bearing adapter retainer (86).
5. Adapter & bearing assembly (85).

Install or Connect

Figures 1 and 24

NOTICE: See "Notice" on page 3F2 –1 of this section.

NOTICE: Ensure all fasteners are securely seated before applying needed torque. Failure to do so may result in component damage or malfunctioning of steering column.

1. Adapter & bearing assembly (85).
   - Lubricate inner surface of bearing (85) with lithium grease.
2. Bearing adapter retainer (86).
3. Lower bearing adapter clip (87).
4. Steering column to vehicle.
5. Negative (–) battery cable.

CHECKING STEERING COLUMN FOR ACCIDENT DAMAGE

NOTICE: Vehicles involved in accidents resulting in frame damage, major body or sheet metal damage, or where the steering column has been impacted may also have a damaged or misaligned steering column.

CHECKING PROCEDURE

JACKET ASM, STEERING COLUMN

- Check capsules on steering column bracket assembly; all should be within 1.59mm from the bottom of the slots (View A). If not, bracket should be replaced if bracket is bolted to the jacket asm or the jacket asm should be replaed if bracket is welded to jacket asm.
- Check contact surface "A" on capsules (View B). The bolt head must no contact surface "A" or shear load would be increased. If contact is made, replace bracket asm or jacket asm.
- Check for jacket asm collapse by measuring the distance from the lower edge of upper jacket to a defined point on the lower jacket (View D). If measured dimensions are not within specifications, a new jacket must be installed.

STEERING SHAFT ASM

- Visually inspect steering shaft for sheared injected plastic (View C). If steering shaft shows sheared plastic, a new steering shaft must be installed.
- Any frame damage that could cause a bent steering shaft must have steering shaft runout checked in the following manner: Using a dial indicator at lower end of steering shaft, have steering wheel rotated. Runout must not exceed 1.59mm.

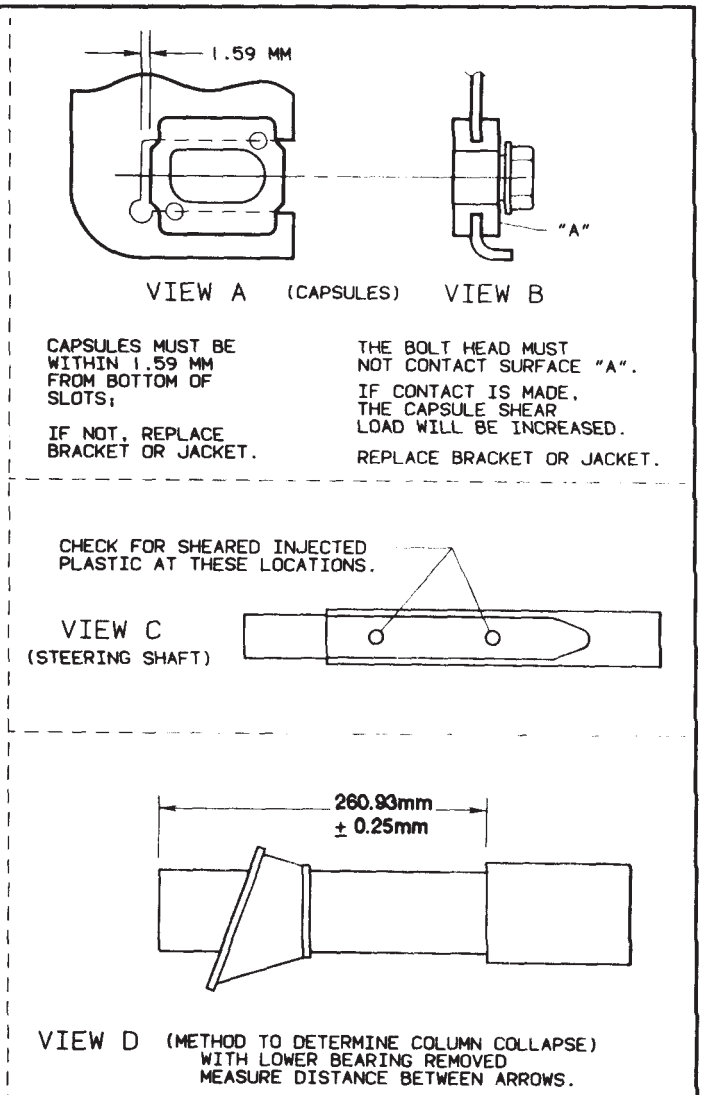

Figure 25 – Checking Steering Column for Accident Damage

SPECIFICATIONS

FASTENER TIGHTENING SPECIFICATIONS

FASTENER TORQUES

1	Steering Wheel–to–Shaft Nut	41.0 N·m (30 lb.ft.)
9	Turn Signal Switch Connecting Screws	3.4 N·m (30 lb.in.)
10	Turn Signal Switch Actuator Assembly Screw	2.3 N·m (20 lb.in.)
15	Lock Housing Cover Screws	9.0 N·m (80 lb.in.)
18	Lock Retaining Screw	2.5 N·m (22 lb.in.)
48	Lock Bolt Spring Screw	4.0 N·m (35 lb.in.)
60	Support–to–Jacket Screws	8.8 N·m (77 lb.in.)
62	Shroud Retaining Plate Screws	3.7 N·m (33 lb.in.)
64	Shift Lever Gate Connecting Screws	3.7 N·m (33 lb.in.)
78	Upper Ignition & Dimmer Switch Screw	4.0 N·m (35 lb.in.)
79	Lower Dimmer Switch Screw	4.0 N·m (35 lb.in.)
81	Lower Ignition Switch Screw	4.0 N·m (35 lb.in.)
84	Support Bracket to Jacket Bolts	30.0 N·m (22 lb.ft.)

SPECIAL TOOLS

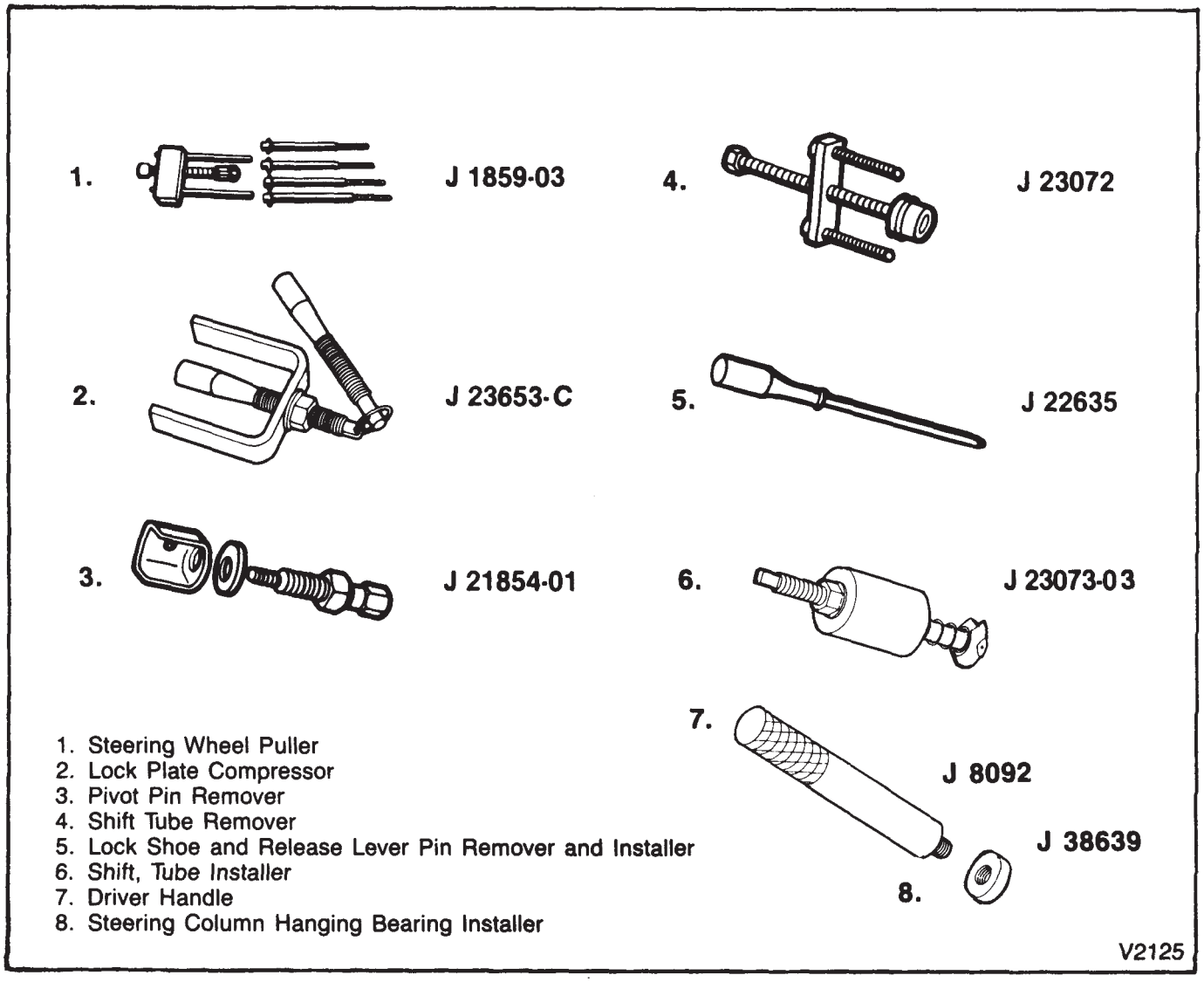

1. Steering Wheel Puller
2. Lock Plate Compressor
3. Pivot Pin Remover
4. Shift Tube Remover
5. Lock Shoe and Release Lever Pin Remover and Installer
6. Shift, Tube Installer
7. Driver Handle
8. Steering Column Hanging Bearing Installer

Figure 26 – Special Tools

SECTION 4

PROPELLER SHAFT AND AXLE

CONTENTS

SUBJECT	PAGE
Propeller Shaft	4A-1
Rear Axle	4B1-1
Front Driving Axle	4C-1

SECTION 4A

PROPELLER SHAFT

NOTICE: When fasteners are removed, always reinstall them at the same location from which they were removed. If a fastener needs to be replaced, use the correct part number for that application. If the correct part number fastener is not available, a fastener of equal size and strength (or stronger) may be used. Fasteners that are not reused and those requiring thread locking compound will be called out. The correct torque value must be used when installing fasteners that require it. If the above conditions are not followed, parts or system damage could result.

CONTENTS

SUBJECT	PAGE
General Description	4A- 1
Propeller Shaft	4A- 1
Universal Joint	4A- 2
Constant Velocity Joint	4A- 4
Diagnosis Of Propeller Shaft And Universal Joint	4A- 4
On-Vehicle Service	4A- 5
Propeller Shaft Balance Check	4A- 5
Propeller Shaft Runout Check	4A- 6
Rear Propeller Shaft Replacement	4A- 6
Front Propeller Shaft Replacement	4A- 7
Universal Joints	4A- 7
Nylon Injected Ring Type	4A- 7
External Snap Ring Type	4A- 9
Specifications	4A-10
Special Tools	4A-10

GENERAL DESCRIPTION

PROPELLER SHAFT

The propeller shaft is a steel tube which is used to transmit power from the transmission or transfer case output shaft to the differential. A universal joint and splined slip yoke are located at the transmission end of the rear driveshaft, where they are held in alignment by a bushing in the transmission rear extension. The slip yoke permits fore and aft movement of the drive shaft as the differential assembly moves up and down. The spline is lubricated internally by transmission lubricant. An oil seal at the transmission prevents leakage and

protects the slip yoke from dust, dirt and other harmful material (figure 1).

A CV (Constant Velocity) universal joint driveshaft is used to transmit power from the transfer case to the front differential (figure 2). The driveshaft is attached to the transfer case flange and front axle companion flange by the flanges on the outer bearing retainers. A plastic shroud protects and retains the dust boot to the bearing retainer and flange assembly.

The universal joints are lubricated for life and cannot be lubricated while on the vehicle. A service kit which consists of a spider with bearing assemblies and snap rings must be installed on the vehicle if a rear universal joint becomes worn or noisy. If it becomes necessary to repair a universal joint, the entire propeller shaft must be removed from the vehicle. Care should be taken to avoid jamming, bending or over-angulating of any parts of the propeller shaft assembly. The front propeller shaft is not repairable.

If a vehicle is to be undercoated, the propeller shaft must be kept completely free of undercoating material. Undercoating material or any other foreign material will upset the propeller shaft balance, and produce serious vibration.

Phasing

The propeller shaft is designed and built with the yoke lugs (ears) in line with each other. This design produces the smoothest running shaft possible, and is known as "in phase" (figure 3).

An out-of-phase propeller shaft can cause vibration. The propeller shaft will generate vibration from speeding up and slowing down each time the universal joint goes around. This vibration would be the same as a person snapping a rope and watching the "wave" reaction flow to the end. An in-phase propeller shaft would be simular to two persons snapping a rope at the same time, and watching the "waves" meet and cancel each other out. A total cancellation of vibration produces a smooth flow of power in the driveline. Since the phasing of a propeller shaft (coupling shaft) is formed between the front and center universal joints, it is very important to referance mark the front and rear propeller shafts before removal to assure proper phasing upon reinstallation.Some splined shaft slip yokes are keyed to assure proper phasing.

UNIVERSAL JOINT

The simple universal joint is a crossmember, refered to as a spider, and rollers, connected and held in place by two Y-shaped yokes. The arms that extend from the spider are called trunnions (figure 4).

The spider allows the two yoke shafts to operate at an angle to each other. When torque is transmitted at an angle, through this type of joint, the driving yoke rotates at a constant speed while the driven yoke

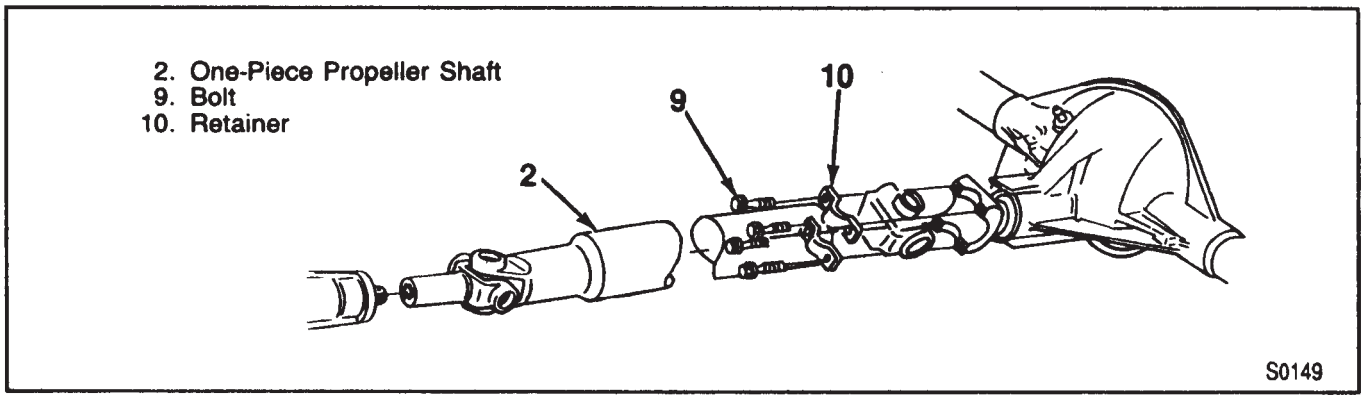

Figure 1—Rear Propeller Shaft

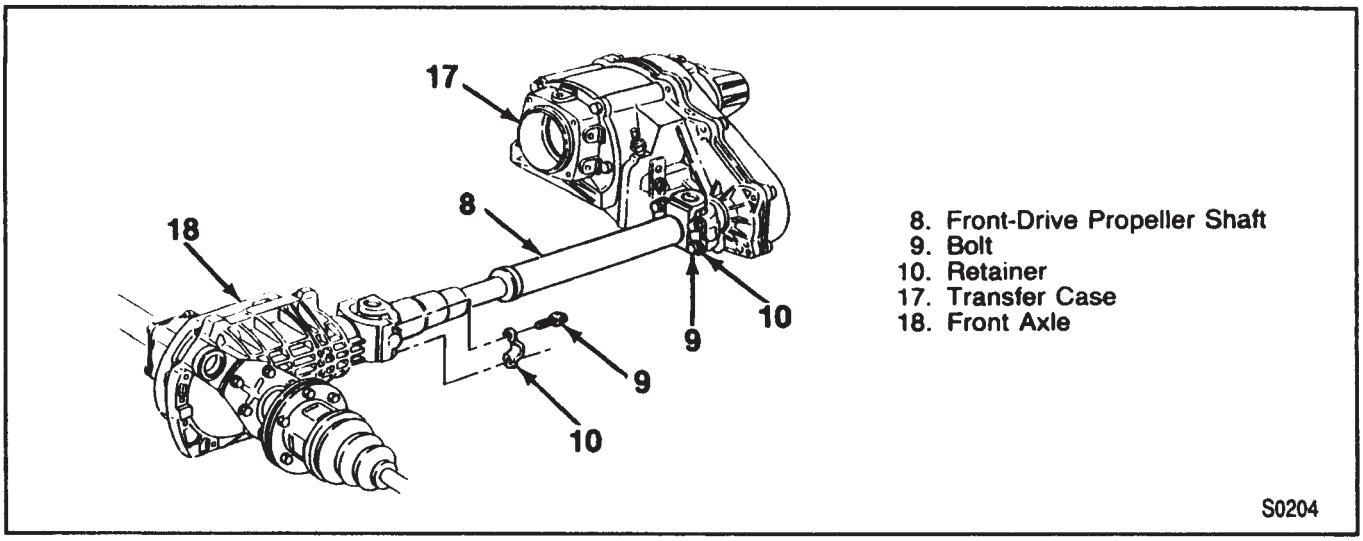

Figure 2—Front Propeller Shaft

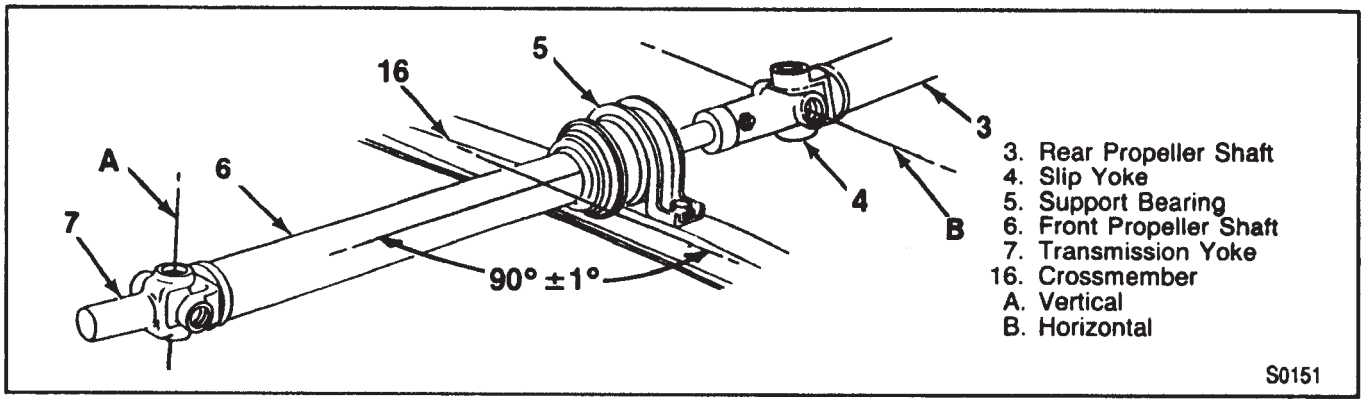

Figure 3—Propeller Shaft Assembly in Phase

speeds up and slows down twice per revolution. This changing of velocity (acceleration) of the driven yoke increases as the angle between the two yoke shaft increases. This is the prime reason why single universal joints are generally not used for angles greater than three to four degrees.

On a one-piece drive shaft this problem can be eliminated by arranging two simple universal joints so that the two driving yokes are rotated 90 degrees to each other. However, the angle between the drive and driven yokes must be nearly the same on both joints for this to work (figure 3). This allows the alternate acceleration and deceleration of one joint to be offset by the alternate deceleration and acceleration of the second joint. When the two joints do not run at approximately the same angle, operation can be rough and an objectionable vibration can be produced.

Universal joints are designed to consider the effects of various loadings and rear axle windup, during acceleration. Within the design angle variations, the universal joints will operate safely and efficiently. However, when the design angles are exceeded the operational life of the joints may decrease.

The bearings used in universal joints are the needle roller type. The needle rollers are held in place on the trunnion by round bearing cups. The bearing cups are held in the yoke by either (depending on the manufacturer) snap rings or plastic injection. These joints usually are lubricated for life and cannot be lubricated while on the vehicle.

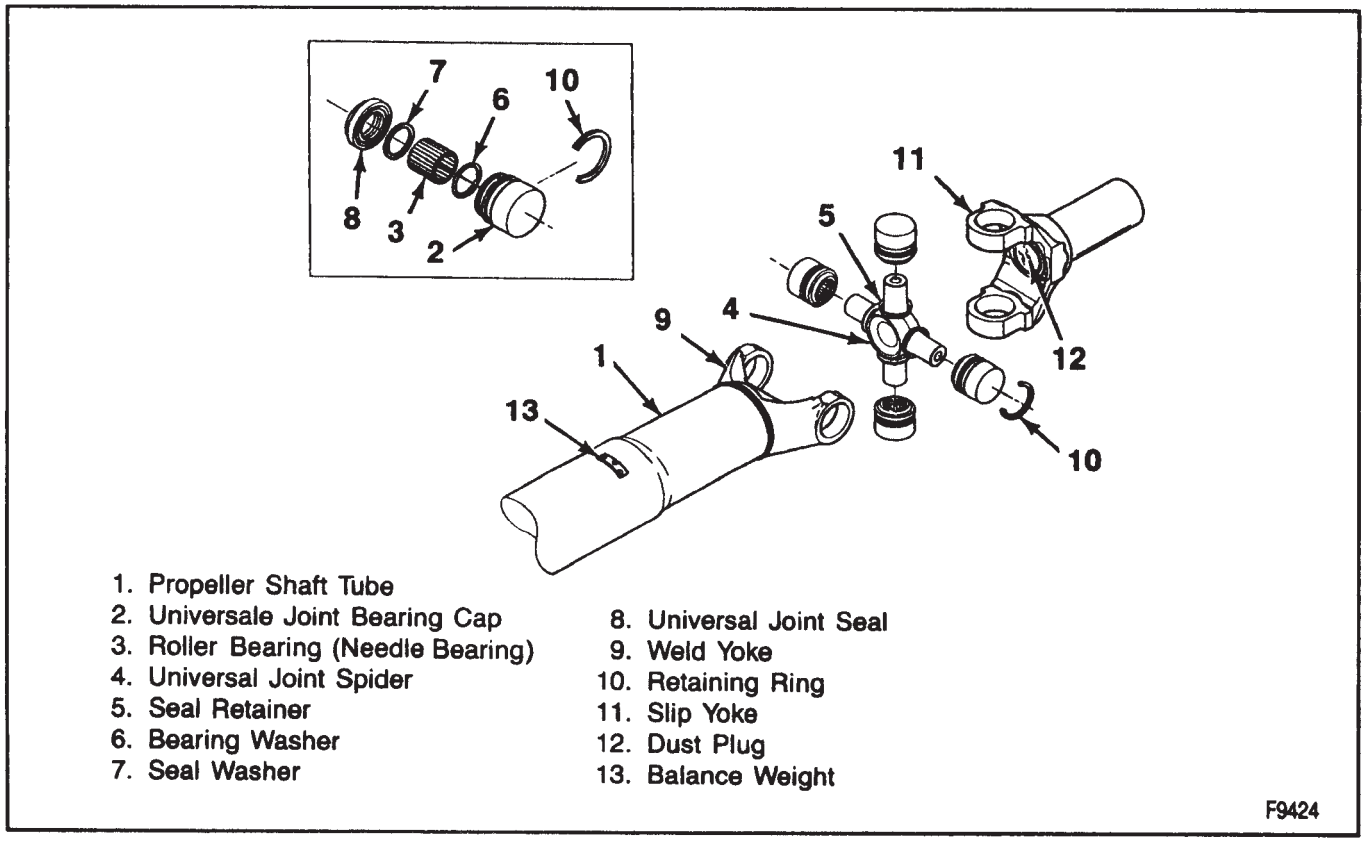

Figure 4—Universal Joint Components

CONSTANT VELOCITY JOINT

The constant velocity joint allows the driveline angle to be adjusted according to the up and down movement of the vehicle without disturbing the power flow. It is composed of an outer bearing retainer (and flange), spring, cap, circlip, inner bearing assembly and wire ring. The inner bearing assembly includes a bearing cage, six ball bearings, and an inner race.

DIAGNOSIS OF PROPELLER SHAFT AND UNIVERSAL JOINT

PROBLEM	POSSIBLE CAUSE	CORRECTION
Leak at the Front Slip Yoke (An Occasional Drop of Lubricant Leaking from the Splined Yoke is Normal and Requires No Attention)	1. Burred, nicked or worn. 2. Defective transmission rear oil seal.	1. Replace the seal. Minor burrs can be smoothed by careful use of crocus cloth or fine stone honing. Replace the yoke if badly burred. 2. Replace the transmission rear oil seal and replenish the transmission oil.
Universal Joint Noise	1. Worn universal joint bearings. 2. Improper lubrication. 3. Loose flange bolts.	1. Replace. 2. Lubricate as directed. 3. Tighten to "Specifications."
Ping, Snap, or Click in Drive Line (Usually Heard on Initial Load after the Transmission is in Gear; Forward or Reverse)	1. Loose bushing bolts on the rear springs or upper and lower control arms. 2. Loose or out of phase companion flange.	1. Tighten the bolts to specified torque. 2. Remove companion flange, turn 180 degrees from its original position, lubricate the splines and install. Tighten the bolts and pinion nut to specified torque.
Knocking or Clunking Noise in the Driveline when Operating the Vehicle in a Floating Condition in High or Neutral Gear at 10 MPH (16 km/h).	1. Worn or damaged universal joint. 2. Side gear hub counterbore in the differential is worn oversize.	1. Replace the worn or damaged universal joint. 2. Replace the differential case and/or the sidegears.
Roughness or Vibration	1. Bent or dented propeller shaft. 2. Undercoating on propeller shaft. 3. Tire unbalance, 30-80 mph (48-129 km/h). Not throttle conscious. 4. Tight universal joints. 5. Worn universal joints. 6. Burrs or gouges on companion flange. Check snap ring locating surfaces on flange yoke. 7. Propeller shaft, parking brake drum or companion flange is unbalanced. 8. Incorrect rear joint angle. The angle is usually too large when it is a factor. 9. Excessive looseness at the slip spline. 10. Distorted or damaged yokes or flanges. 11. Propeller shaft runout at 50 mph (80 km/h). Throttle conscious.	1. Replace propeller shaft. 2. Clean propeller shaft. 3. Balance or replace as required. 4. Impact yokes with a shaft hammer to free up. If unable to free up or if joint feels rough when rotated, replace. 5. Replace. 6. Rework or replace the companion flange. 7. Check for a missing balance weight on the propeller shaft. Rotate the companion flange 180 degrees. 8. Check and correct trim height at curb weight. Check and correct joint angle. 9. Replace necessary parts. 10. Install new yokes or flanges. 11. Check propeller shaft runout. Refer to "Propeller Shaft Runout Check" in this section. Replace the propeller shaft if runout is still over specification.
Scraping Noise	Slinger, companion flange, or end yoke rubbing on rear axle.	Correct the interference.

DIAGNOSIS OF PROPELLER SHAFT AND UNIVERSAL JOINT (cont'd)

PROBLEM	POSSIBLE CAUSE	CORRECTION
Squeak	1. Lack of lubricant.	1. Lubricate joints and splines. Also check for worn or brinelled parts.
Shudder on Acceleration (Low Speed)	1. Loose or missing bolts at the center bearing or flanges. 2. Incorrectly set front joint angle. 3. Worn universal joint.	1. Replace or tighten bolts to specified torque. 2. Shim under the transmission support mount to change the front joint angle. 3. Replace.
		D0201

ON-VEHICLE SERVICE

PROPELLER SHAFT BALANCE CHECK

Important

- Never vent or fill the propeller shaft with an aerosol foam product. This will cause an excessive imbalance condition.
- Raise the vehicle on a hoist so the wheels can spin.

Important

- In order to get an accurate check it is necessary to lift the vehicle by the axle or suspension to duplicate actual conditions. By doing this, the pinion angle will be as close as possible to normal.

Remove or Disconnect

1. Tire and wheel assemblies.
2. Brake drums.

Inspect

- Propeller shaft, universal joints, and attachments for mud, undercoating, or loose fasteners.

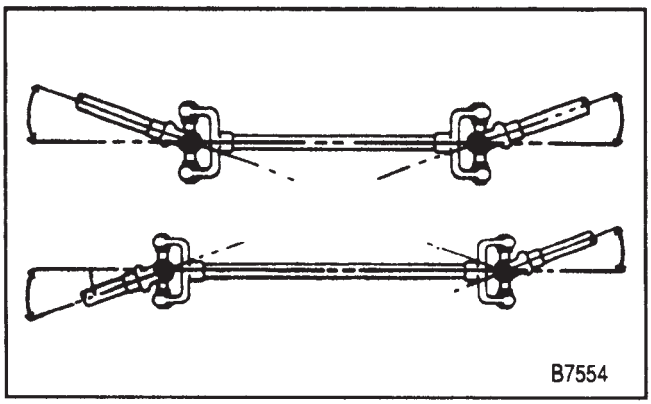

Figure 5—Universal Joints Arranged for Constant Velocity

Clean

- Propeller shaft, universal joints, and attachments.

Tighten

- Any loose attachments or fasteners.

CAUTION: Do not spin the drive wheels faster than 35 mph (55 km/h) as indicated by the speedometer. This limit is necessary because the speedometer indicates only one-half of the actual wheel speed when one drive wheel is spinning and the other drive wheel is stopped. Personal injury and damage may result from high speed spinning.

Important

All persons should stay clear of universal joints and balance weight areas to avoid possible injury. Do not run the vehicle on the hoist for extended periods due to the danger of overheating the transmission or engine.

Measure

- Run the vehicle in gear at the speed where the disturbance peaks; observe the intensity of the disturbance. Refer to VIBRATION DIAGNOSIS (SEC 0C).

Important

DO NOT APPLY THE BRAKES WITH THE DRUMS REMOVED.

3. Bolts (9) (figure 1).

Important

It is essential that the positions of all driveline components relative to the propeller shaft and axles be observed and *ACCURATELY REFERENCE MARKED PRIOR TO DISASSEMBLY.* These components include the propeller shafts, drive axles, pinion flanges, output shafts, etc. *ALL COMPONENTS MUST BE REASSEMBLED IN THE EXACT RELATIONSHIP TO EACH OTHER AS THEY WERE WHEN REMOVED.* Additionally, the published specifications and torque values, as well as any measurements made prior to disassembly must be followed.

4. Retainers (10).
5. Propeller shaft.
   - Rotate the propeller shaft 180 degrees from the original position.

Install or Connect

1. Propeller shaft.
2. Retainers.

NOTICE: See " NOTICE " on page 4A-1.

3. Bolts.
   - Determine the position which gives the best balance.
4. Rear drums. Refer to SECTION 5.
5. Wheel and tire assemblies. Refer to SECTION 3E.
   - Determine the position which gives the best driveline response by road testing the vehicle for a final check of the propeller shaft balance.
   - If unacceptable balance/vibration, continue with "Propeller Shaft Runout Check"later in this section.

PROPELLER SHAFT RUNOUT CHECK

Noise or vibration at high speed could be caused by a bent propeller shaft. The propeller shaft could have been damaged by rough handling or a collision. Check for propeller shaft straightness.

1. Raise the vehicle on a hoist so the wheels can spin.

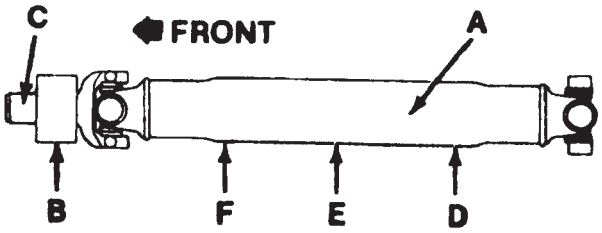

A. Tube
B. Damper
C. Slip Yoke
D. Rear Runout Check
E. Center Runout Check
F. Front Runout Check

F1123

Figure 6—Propeller Shaft Runout Check Points

2. Attach a dial indicator having a magnetic base to a smooth place on the vehicle underbody.
3. Take dial indicator readings at the propeller shaft check points (figure 6).

Important

- Do not attach the dial indicator base at a weld.

4. With the transmission in neutral, hand rotate the axle pinion flange or the transmission yoke and take the necessary dial indicator readings on the propeller shaft. Record the readings.

Important

- Propeller shaft runout is critical to the smooth operation of the driveline. If the runout exceeds the specification the propeller shaft must be replaced. Take care not to include dial indicator variation caused by surface contamination, ridges, flat spots, or other variance in the tube.

5. If the runout exceeds specification, rotate the propeller shaft 180 degrees at the companion flange and install. Check the runout.
6. If the propeller shaft runout is over specification, check for a bent companion flange. Refer to SECTION 0C.
7. If the runout is still over specification at one or more check points, replace the propeller shaft after checking for vibration or noise.
   - Check the runout on the replacement propeller shaft.

REAR PROPELLER SHAFT REPLACEMENT

Remove or Disconnect (Figure 1)

- Raise the vehicle on a hoist.

Important

It is essential that the positions of all driveline components relative to the propeller shaft and axles be observed and *ACCURATELY REFERENCE MARKED PRIOR TO DISASSEMBLY.* These components include the propeller shafts, drive axles, pinion flanges, output shafts, etc. *ALL COMPONENTS MUST BE REASSEMBLED IN THE EXACT RELATIONSHIP TO EACH OTHER AS THEY WERE WHEN REMOVED.* Additionally, the published specifications and torque values, as well as any measurements made prior to disassembly must be followed.

1. Bolts (9).
2. Retainers (10).

Important

- Do not pound on the original propeller shaft yoke ears. The injection joints may fracture. Never pry or place any tool between a yoke and a universal joint.

3. Yoke and cross assembly.

- Tape bearing cups to prevent the loss of bearing rollers.

4. Propeller shaft (2).
   - Slide the propeller shaft (2) forward.
   - Lower the propeller shaft and remove under the rear axle.
   - Do not allow the universal joint to incline greatly; the joint may fracture.

Clean

- All parts.

Inspect

- Outer diameter of nylon injected yoke for burrs. Any burring will damage the transmission seal.
- For proper installation and uniform seating of the bearing cups.
- Slip yoke splines for wear.
- For twisted slip yoke splines or possibly the wrong universal joint. Replace parts as necessary.

Install or Connect (Figure 1)

1. Propeller shaft (2) into the transmission.
   - Lubricate slip joint.
2. Yoke and cross assembly (12) onto the pinion flange.
   - Align the reference marks on the pinion flange. and the propeller shaft rear yoke. Seat the yoke properly.
3. Retainers (10).

NOTICE: See "Notice" on page 4A-1 of this section.

4. Bolts (9).

Tighten

- Bolts (9) to 37 N.m (27 ft. lbs.).

FRONT PROPELLER SHAFT REPLACEMENT

Remove or Disconnect (Figure 2)

- Raise the vehicle on a hoist.

Important

It is essential that the positions of all driveline components relative to the propeller shaft and axles be observed and *ACCURATELY REFERENCE MARKED PRIOR TO DISASSEMBLY.* These components include the propeller shafts, drive axles, pinion flanges, output shafts, etc. *ALL COMPONENTS MUST BE REASSEMBLED IN THE EXACT RELATIONSHIP TO EACH OTHER AS THEY WERE WHEN REMOVED.* Additionally, the published specifications and torque values, as well as any measurements made prior to disassembly must be followed.

- Accurately mark the propeller shaft.

1. Bolts (9) from transfer case.
2. Bolts (9) from front axle.
3. Shaft (8).

Install or Connect (Figure 2)

1. Shaft (8).
   - Line up the marks made previously.
2. Bolts (9) to transfer case.

Tighten

- Bolts (9) to 125 N.m (92 ft. lbs.).

3. Bolts (9) to front axle.

Tighten

- Bolts (9) to 72 N.m (53 ft.lbs.).

UNIVERSAL JOINTS

NYLON INJECTED RING TYPE

NOTICE: NEVER CLAMP PROPELLER SHAFT TUBING IN A VISE. Clamping propeller shaft tubing in a vise could dent or deform the tube causing an imbalance or unsafe condition. Always clamp on one of the yokes and support the shaft horizontally. Avoid damaging the slip yoke sealing surface. Nicks may damage the bushing or cut the lip seal.

Tools Required:
J 9522-3 Universal Joint Bearing Separator
J 9522-5 Universal Joint Bearing Remover Spacer

- Support the propeller shaft in a line horizontal with the table of a press.
- Mark the propeller shaft as to which end is the transmission end and which end goes to the rear axle.
- Place the universal joint so that the lower ear of the yoke is supported on a 1-1/8 inch (30 mm) socket (figure 7).
- In order to shear the plastic retaining ring on the bearing cup, place J 9522-3 (cross press) on the open horizontal bearing cups and press the lower

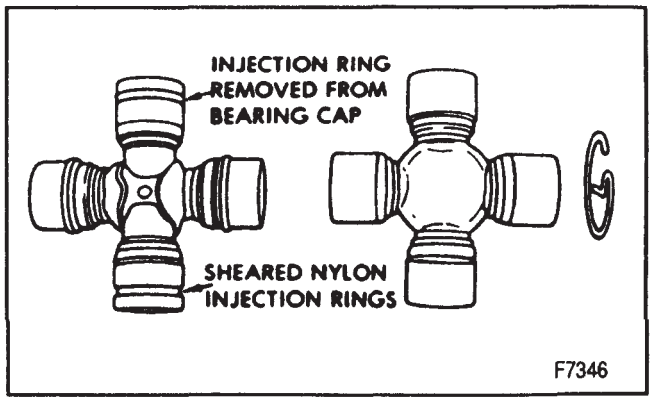

Figure 7—Production Universal Joints

bearing cup out of the yoke ear. If the bearing cup is not completely removed, lift the cross and insert tool J 9522-5 (spacer) between the seal and bearing cup being removed and continue to press it out of the yoke (figure 8).
- Rotate the propeller shaft and press the opposite bearing cup out of the yoke.

Disassemble

1. The cross from the yoke.
2. Remaining universal joint parts from the yoke.
   - If the front universal joint is being replaced, remove the bearing cups in the slip yoke in the same manner.

Inspect

1. The retaining ring grooves for plastic.
2. The bearing cup bores for burrs or imperfections.

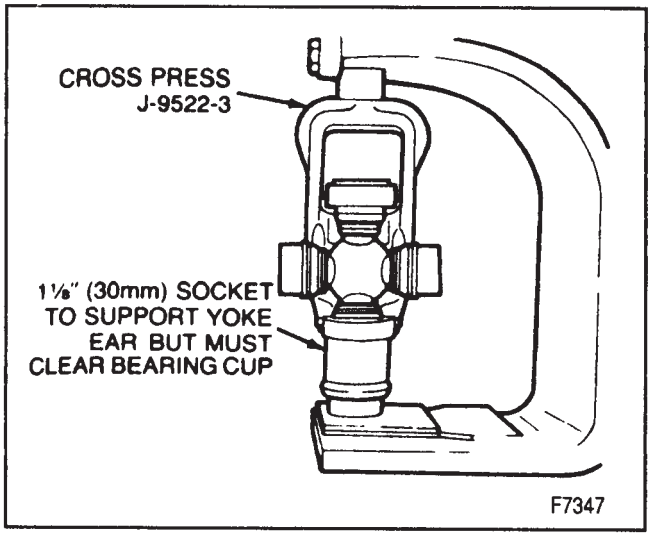

Figure 8—Pressing Out Universal Joint

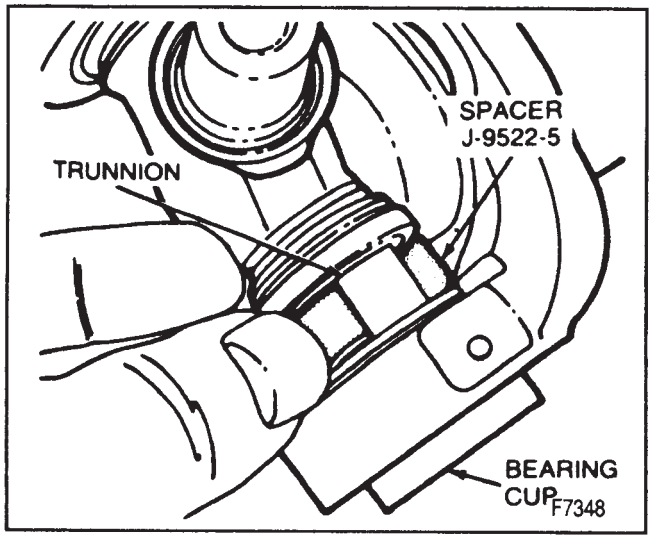

Figure 9—Using Available Spacer

Clean

- The remains of the sheared plastic bearing retainers from the grooves in the yoke.
- The sheared plastic may prevent the bearing cups from being pressed into place and thus prevent the bearing retainers from being properly seated.

Assemble

- Remove the bearing cups from the universal joint and use your finger to coat the needle bearings in the bearing cup with a thin layer of grease.

1. One bearing cup part way into one side of the yoke (figure 10).
   - Turn the yoke ear towards the bottom.
2. Cross into the yoke so that the trunnion seats freely into the bearing cup.
   - With the trunnion seated in the bearing cup press the bearing cup into the yoke until it is flush with the yoke ear.
3. The opposite bearing cup part way into the yoke ear.
   - Make sure that the trunnions are started straight and true into both bearing cups.
   - Press the opposite bearing cup into the yoke ear while working the cross all the time to check for free unbinding movement of the trunnions in the bearing cups (figure 11).

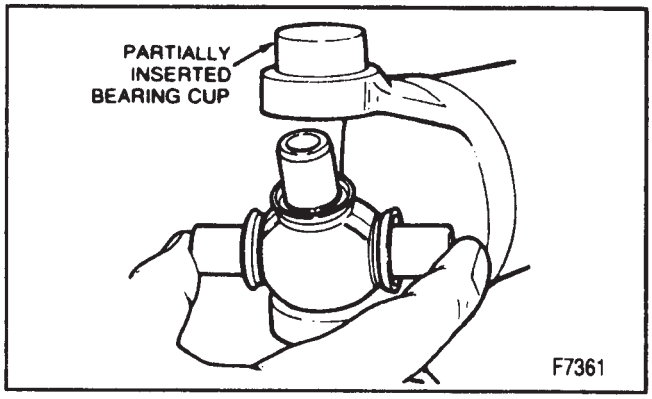

Figure 10—Partially Inserted Bearing Cup

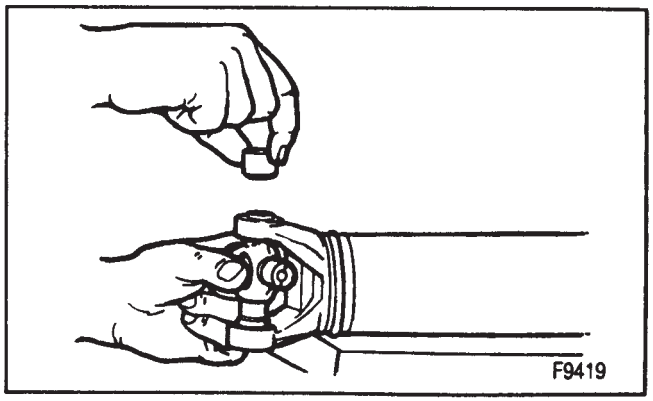

Figure 11—Aligning the Trunnion Between the Bearing Cups

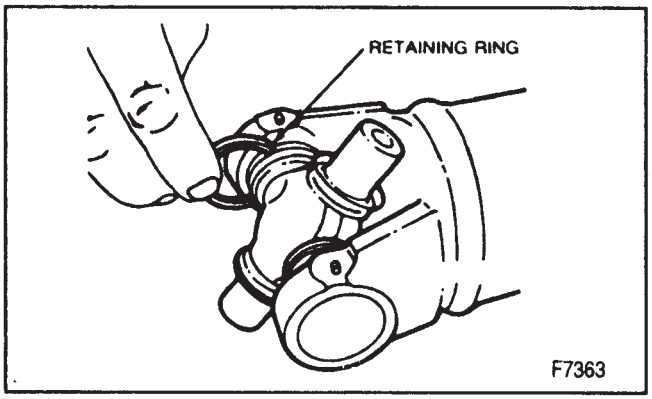

Figure 12—Installing Retaining Ring

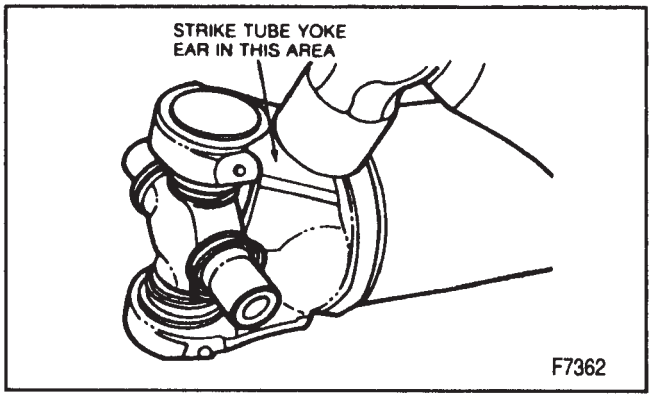

Figure 13—Seating the Universal Joint Snap Ring

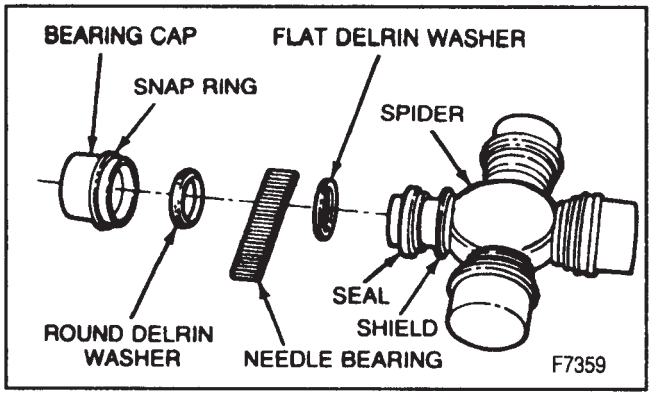

Figure 14—Internal Snap Ring Universal Joint

- Press the bearing cup into the yoke until the bearing retainer groove clears the inside of the yoke.

Important

- If there seems to be a hang-up or binding, stop pressing, and check the needle bearings for misalignment in the bearing cup.

4. Bearing retainer in the retainer groove (figure 12).
   - Continue to press until both retainers can be snapped into place.
   - If difficulty in seating the retainer is encountered, the yoke can be sprung slightly with a firm blow from a dead blow hammer (figure 13).
   - Lubricate as necessary.

EXTERNAL SNAP RING TYPE

NOTICE: NEVER CLAMP PROPELLER SHAFT TUBING IN A VISE. Clamping propeller shaft tubing in a vise could dent or deform the tube causing an imbalance or unsafe condition. Always clamp on one of the yokes and support the shaft horizontally. Avoid damaging the slip yoke sealing surface. Nicks may damage the bushing or cut the lip seal.

Tools Required:
J 9522-3 Universal Joint Bearing Separator
J 9522-5 Universal Joint Bearing Remover Spacer

- Support the propeller shaft in a line horizontal with the table of a press.
- Mark the propeller shaft as to which end is the transmission end and which end goes to the rear axle.

Disassemble

1. Snap rings by pinching the ends together with a pair of pliers.
   - If the ring does not readily snap out of the groove in the yoke, tap the end of the bearing cup lightly to relieve the pressure from the ring.
   - Place the universal joint so that the lower ear of the yoke is supported on a 1-1/8 inch (30 mm) socket (figure 7).
   - Place J 9522-3 (cross press) on the open horizontal bearing cups and press the lower bearing cup out of the yoke ear. If the bearing cup is not completely removed, lift the cross and insert tool J 9522-5 (spacer) between the seal and bearing cup being removed and continue to press it out of the yoke (figure 8).
   - Rotate the propeller shaft and press the opposite bearing cup out of the yoke.

Disassemble

1. The cross from the yoke.
2. Remaining universal joint parts from the yoke.
   - If the front universal joint is being replaced, remove the bearing cups in the slip yoke in the same manner.

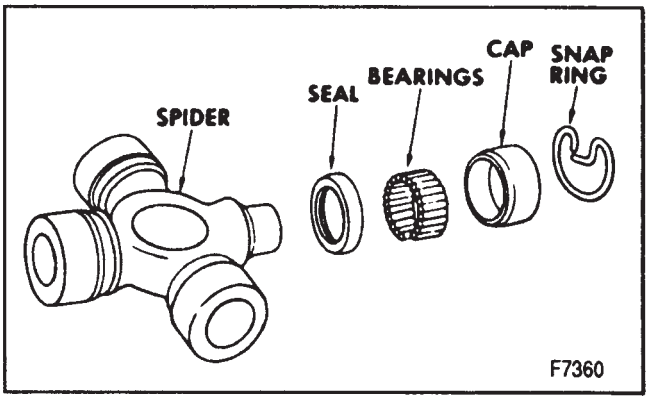

Figure 15—External Snap Ring Universal Joint

Inspect

- The retaining ring grooves for dirt, corrosion, or pieces of the old ring.
- The bearing cup bores for burrs or imperfections.

Clean

- The retaining ring grooves.
- Corrosion, dirt, rust, or pieces of the old retaining ring may prevent the bearing cups from being pressed into place or prevent the bearing retainers from being properly seated.

Assemble

- Remove the bearing cups from the universal joint and use your finger to coat the needle bearings in the bearing cup with a thin layer of grease.

1. One bearing cup part way into one side of the yoke (figure 9).
   - Turn the yoke ear towards the bottom.
2. Cross into the yoke so that the trunnion seats freely into the bearing cup.
   - With the trunnion seated in the bearing cup press the bearing cup into the yoke until it is flush with the yoke ear (figure 10).
3. The opposite bearing cup part way into the yoke ear.
   - Make sure that the trunnions are started straight and true into both bearing cups.
   - Press the opposite bearing cup into the yoke ear while working the cross all the time to check for free unbinding movement of the trunnions in the bearing cups.
   - Press the bearing cup into the yoke until the bearing cup retainer groove is visible over the top of the bearing cup.

Important

- If there seems to be a hang-up or binding, stop pressing, and check the needle bearings for misalignment in the bearing cup.

4. Bearing retainer in the retainer groove (figure 13).
   - Continue to press until both retainers can be snapped into place.
   - If difficulty in seating the retainer is encountered, the yoke can be sprung slightly with a firm blow from a dead blow hammer (figure 14).
   - Lubricate as necessary.

SPECIFICATIONS

PROPELLER SHAFT RUNOUT

Propeller Shaft	One-Piece
Front	0.60 mm (0.024-inch)
Center	0.60 mm (0.024-inch)
Rear	0.60 mm (0.024-inch)

FASTENER TORQUE

	N·m	Ft. Lbs.
Yoke Strap Bolts	37	27
Flange to Transfer Case Bolts	125	92
Flange to Front Axle Bolts	72	53

T2066

SPECIAL TOOLS

1. J 9522-3

2. J 9522-5

1. "U" Joint Bearing Separator
2. "U" Joint Bearing Spacer Remover (Use with J 9522-3)

F9743

SECTION 4B1

REAR AXLE

NOTICE: When fasteners are removed, always reinstall them at the same location from which they were removed. If a fastener needs to be replaced, use the correct part number fastener for that application. If the correct part number fastener is not available, a fastener of equal size and strength (or stronger) may be used. Fasteners that are not reused, and those requiring thread locking compound will be called out. The correct torque value must be used when installing fasteners that require it. If the above conditions are not followed, parts or system damage could result.

CONTENTS

SUBJECT	PAGE
General Description	4B1- 1
Locking Differential	4B1- 2
Rear Axle Identification	4B1- 2
Diagnosis of Rear Axle Noise	4B1- 3
Diagnosis of Locking Differential	4B1- 7
Diagnosis of Pinion Flange	4B1- 8
Pinion Flange Runout Measurement	4B1- 8
On-Vehicle Service	4B1- 9
Carrier Cover Gasket Replacement	4B1- 9
Axle Shaft Replacement	4B1- 9
Oil Seal And/Or Bearing Replacement	4B1-10
Pinion Flange Replacement	4B1-11
Pinion Oil Seal Replacement	4B1-12
Axle Vent Hose Replacement	4B1-13
Axle Housing Replacement	4B1-13
Specifications	4B1-14
Special Tools	4B1-15

GENERAL DESCRIPTION

The 7 1/2-inch and 7 5/8-inch ring gear rear axles use a conventional ring and pinion gear set to transmit the driving force of the engine to the rear wheels. This gear set transfers this driving force at a 90-degree angle from the propeller shaft to the axle shafts. The center line of the pinion gear is below the center line of the ring gear (hypoid drive).

All parts necessary to transmit power from the propeller shaft to the rear wheels are enclosed in a salisbury type axle housing (a carrier casting with tubes pressed and welded into the carrier). This axle is designed for use with an open driveline and leaf springs.

The axle assembly is a semi-floating type in which the vehicle weight is carried on the axle housing (figure 1). The axle shafts are supported at the wheel end of the shaft by a roller bearing that is pressed into the housing. The shafts are retained in the housing by retaining clips within the differential. The pinion gear is supported by two tapered roller bearings. The pinion depth is set by a shim pack located between the gear end of the pinion and the roller bearing that is pressed onto the pinion. The pinion bearing preload is set by crushing a collapsible spacer between the bearings in the axle housing.

The differential is used to allow the wheels to turn at different rates of speed while the rear axle continues to transmit the driving force. This prevents tire scuffing when going around corners and prevents premature wear on internal axle parts.

The differential case is supported in the axle housing by two tapered roller bearings. The differential and ring gear are located in relationship to the pinion by using selective shims and spacers between the bearings and the axle housing. The ring gear is bolted onto the differential case with 10 left-hand thread bolts. To move the ring gear, shims are deleted from one side and an equal amount are added to the other side. These shims are also used to preload the bearings which are pressed onto the differential case. Two bearing caps are used to hold the differential into the rear axle housing.

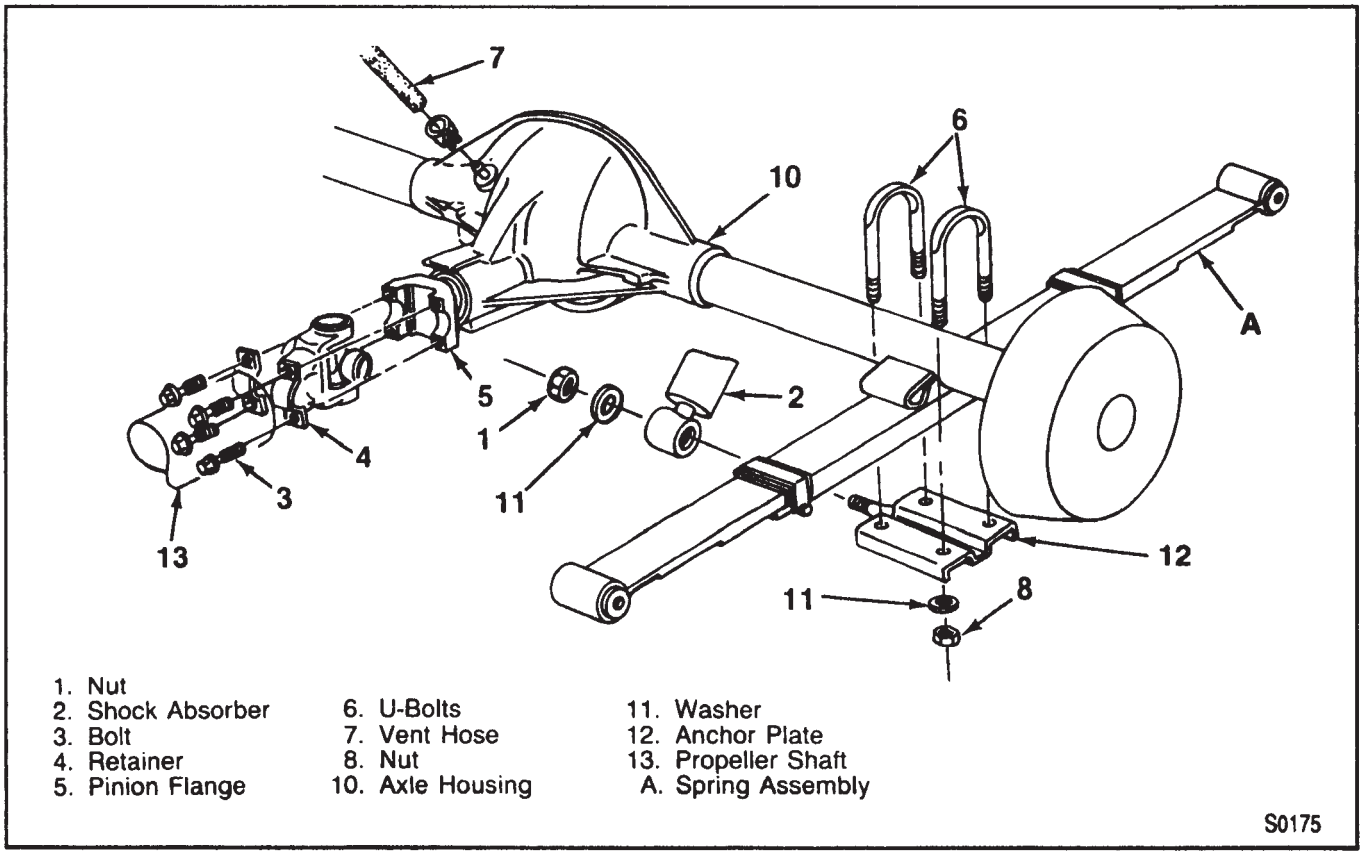

Figure 1—Rear Axle Assembly

The rear axle is sealed with a pinion seal, a seal at each axle shaft end, and by a gasket between the rear cover and the axle housing.

A removable steel cover at the rear of the axle housing permits rear axle service without removing the entire assembly from the vehicle. The carrier cover does not have a drain plug.

LOCKING DIFFERENTIAL

The locking differential allows for normal differential function until one wheel spins. The locking differential incorporates multi-disc clutch packs and a speed sensitive engagement mechanism which locks both wheels together if either should spin excessively during slow vehicle operation.

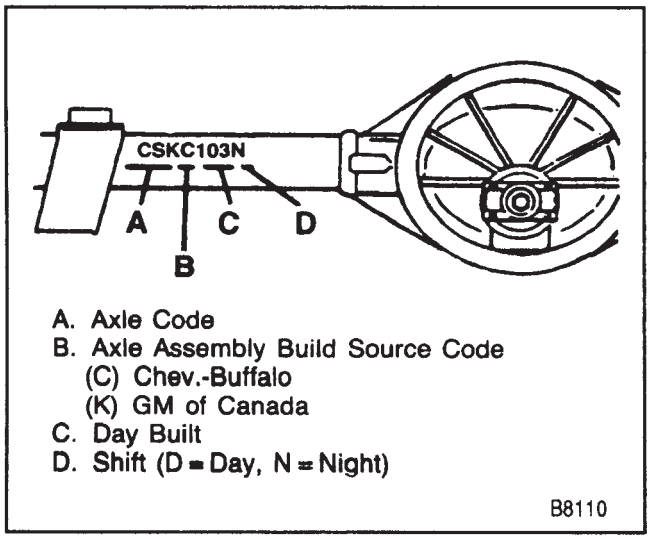

Figure 2—Rear Axle Identification

REAR AXLE IDENTIFICATION

All corporate rear axles are identified by an alphabetic broadcast code on the right axle tube near the carrier. The rear axle identification code and manufacturer's code must be known before attempting to adjust or repair axle shafts or the rear axle case assembly. Rear axle ratio, differential type, manufacturer, and build date information is stamped on the right axle tube on the forward side (figure 2). Any reports made on rear axle assemblies must include the full code letters and build date numbers.

Refer to SECTION 0B for periodic maintenance and lubrication intervals.

DIAGNOSIS OF REAR AXLE NOISE

Many noises that appear to come from the rear axle actually originate from other sources such as tires, road surface, wheel bearings, engine, transmission, muffler, or body drumming. A thorough check should be made to find the source of the noise before disassembling the rear axle. Rear axles, like any other mechanical device, are not absolutely quiet but should be considered quiet unless some abnormal noise is present.

To make a systematic check for axle noise, observe the following:

1. Select a level asphalt road to reduce tire noise and body drumming.
2. Check rear axle lubricant level to assure correct level, then drive the vehicle far enough to thoroughly warm up the rear axle lubricant.
3. Note the speed at which noise occurs. Stop the vehicle and put the transmission in neutral. Run the engine speed slowly up and down to determine if the noise is caused by exhaust, muffler noise, or other engine conditions.
4. Tire noise changes with different road surfaces while axle noises do not. Temporarily inflate all tires to 344 kPa (50 psi) (for test purposes only). This will change noise caused by tires but will not affect noise caused by the rear axle.

   Rear axle noise usually stops when coasting at speeds under 48 km/ph (30 MPH); however, tire noise continues with a lower tone. Rear axle noise usually changes when comparing drive and coast, but tire noise stays about the same.

   Distinguish between tire noise and rear axle noise by noting if the noise changes with various speeds or sudden acceleration and deceleration. Exhaust and axle noise show variations under these conditions while tire noise remains constant and is more pronounced at speeds of 32 to 48 km/ph (20 to 30 MPH). Further check for tire noise by driving the vehicle over smooth pavements or dirt roads (not gravel) with the tires at normal pressure. If the noise is caused by tires, it will change noticeably with changes in road surface.
5. Loose or rough front wheel bearings will cause noise which may be confused with rear axle noise; however, front wheel bearing noise does not change when comparing drive and coast. Light application of the brake while holding vehicle speed steady will often cause wheel bearing noise to diminish. Front wheel bearings may be checked for noise by jacking up the wheels and spinning them or by shaking the wheels to determine if bearings are loose.
6. Rear suspension rubber bushings and spring insulators dampen out rear axle noise when correctly installed. Check to see that no metal to metal contact exists between the spring and the spring opening in the frame. Metal-to-metal contact at these points may result in road noise and normal axle noise which would not be objectionable if dampened by bushings.
7. Make sure that there is no metal to metal contact between the floor and the frame.

After the noise has been determined to be in the axle, the type of axle noise should be determined to aid in making any necessary repairs.

GEAR NOISE

Gear noise (whine) is audible from 32 to 89 km/ph (20 to 55 MPH) under one or more of the following:

1. In drive under acceleration or heavy pull.
2. In vehicle driving load or under constant speed.
3. When using enough throttle to keep the vehicle from driving the engine while the vehicle slows down gradually (engine still pulls slightly).
4. When coasting with the vehicle in gear and the throttle closed.

BEARING NOISE

Bad bearings generally produce a rough growl or grating sound, rather than the whine typical of gear noise. Bearing noise frequently "wow-wows" at bearing rpm, indicating a bad pinion or rear axle side bearing. (figures 3 and 4) This noise could easily be confused with rear wheel bearing noise.

REAR WHEEL BEARING NOISE

A rough rear wheel bearing produces a noise which continues with the vehicle coasting at low speed and the transmission in neutral. Noise may diminish by gentle braking. With the rear wheels jacked up, spin the rear wheels by hand while listening at the hubs for evidence of a rough (noisy) wheel bearing. Refer to figure 5 for wheel bearing diagnosis.

KNOCK AT LOW SPEEDS

Low speed knock can be caused by worn universal joints or a side gear hub counterbore in the case that is worn oversize. Inspect and replace universal joints or case and side gears as required.

BACKLASH CLUNK

Excessive clunk on acceleration and deceleration is caused by the worn rear axle pinion shaft, a worn case, excessive clearance between the axle and the side gear splines, excessive clearance between the side gear hub and the counterbore in the case, worn pinion and side gear teeth, worn thrust washers, and excessive drive pinion and ring gear backlash. Remove worn parts and replace as required. Select close fitting parts when possible. Adjust pinion and ring gear backlash.

TAPERED ROLLER BEARING DIAGNOSIS

Consider the following factors when diagnosing bearing condition:

1. General condition of all parts during disassembly and inspection.
2. Classify the failure with the aid of the illustrations.
3. Determine the cause.
4. Make all repairs following recommended procedures.

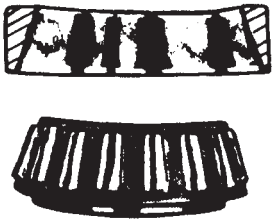

ABRASIVE ROLLER WEAR

Pattern on races and rollers caused by fine abrasives.
Clean all parts and housings, check seals and bearings and replace if leaking, rough or noisy.

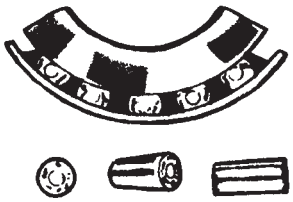

GALLING

Metal smears on roller ends due to overheat, lubricant failure or overload.
Replace bearing, check seals and check for proper lubrication.

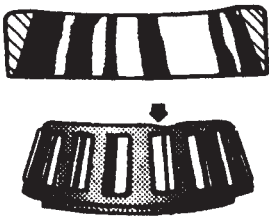

BENT CAGE

Cage damaged due to improper handling or tool usage.
Replace bearing.

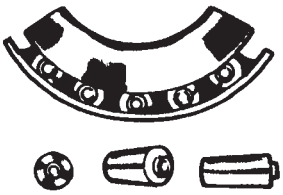

ABRASIVE STEP WEAR

Pattern on roller ends caused by fine abrasives.
Clean all parts and housings, check seals and bearings and replace if leaking, rough or noisy.

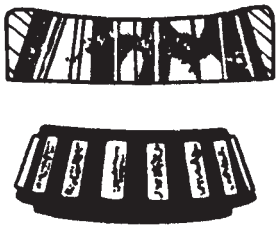

ETCHING

Bearing surfaces appear gray or grayish black in color with related etching away of material usually at roller spacing.
Replace bearings, check seals, and check for proper lubrication.

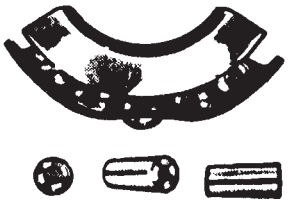

BENT CAGE

Cage damaged due to improper handling or tool usage.
Replace bearing

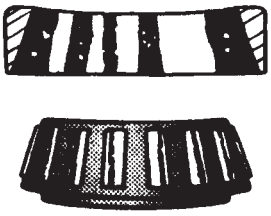

INDENTATIONS

Surface depressions on race and rollers caused by hard particles of foriegn material.
Clean all parts and housings Check seals and replace bearings if rough or noisy.

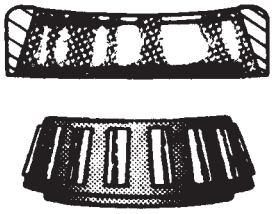

MISALIGNMENT

Outer race misalignment due to foreign object.
Clean related parts and replace bearing. Make sure races are properly sealed.

F9315

Figure 3—Tapered Roller Bearing Diagnosis

Diagnosis of Tapered Roller Bearings (con't)

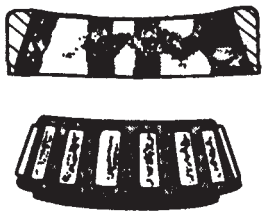

FATIGUE SPALLING

Flaking of surface metal resulting fron fatigue.
Replace bearing, clean all related parts.

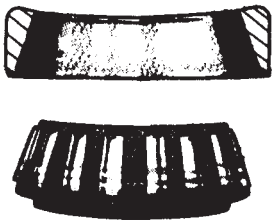

STAIN DISCOLORATION

Discoloration can range fron light brown to black caused by incorrect lubricant or moisture.
Re-use bearings if stains can be removed by light polishing or if no evidence of overheating is observed.
Check seals and related parts for damage.

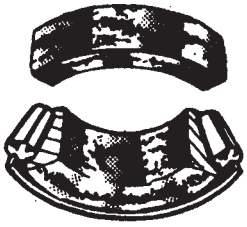

FRETTAGE

Corrosion set up by small relative movement of parts with no lubrication.
Replace bearing. Clean related parts.
Check seals and check for proper lubrication.

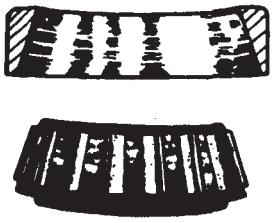

CAGE WEAR

Wear around outside diameter of cage and roller pockets caused by abrasive material and inefficient lubrication.
Clean related parts and housings.
Check seals and replace bearings.

HEAT DISCOLORATION

Heat discoloration can range from faint yellow or dark blue resulting from overload or incorrect lubricant. Excessive heat can cause softening of races or rollers. To check for loss of temper on races or rollers a simple file test may be made. A file drawn over a tempered part will grab and cut metal, whereas, a file drawn over a hard part will glide readily with no metal cutting.
Replace bearings if overheating damage is indicated.
Check seals and other parts.

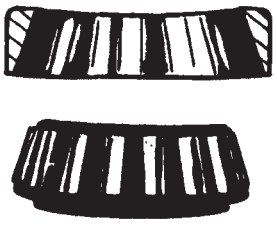

BRINELLING

Surface indentations in raceway caused by rollers either under impact loading or vibration while the bearing is not rotating.
Replace bearing if rough or noisy.

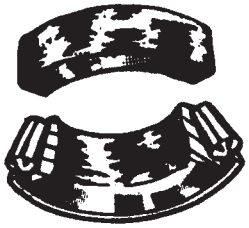

SMEARS

Smearing of metal due to slippage. Slippage can be caused by poor fits, lubrication, overheating, overloads or handling damage.
Replace bearings, clean related parts and check for proper fit and lubrication.

CRACKED INNER RACE

Race cracked due to improper fit, cocking, or poor bearing seats.
Replace bearing and correct bearing seats.

F9314

Figure 4—Tapered Roller Bearing Diagnosis

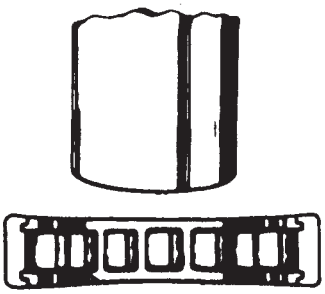

WEAR (MINOR)

Light pattern on races and rollers caused by *fine abrasives.*

Clean all parts and housings. Check seals and replace bearings if rough or noisy.

Replace shaft if damaged.

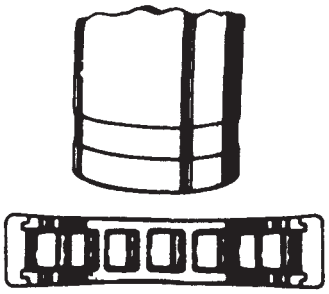

WEAR (MAJOR)

Heavy pattern on races and rollers caused *by fine abrasives.*

Clean all parts and housings. Check seals and replace bearings if rough or noisy.

Replace shaft if damaged.

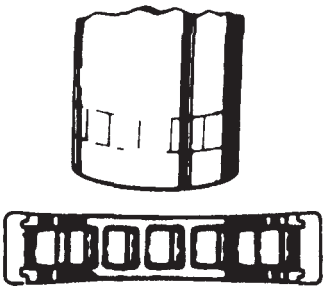

BRINELLING

Surface identations in raceway caused by *roll either under impact loading or vibration* while the bearing is not rotating.

Replace bearing if rough or noisy.

Replace shaft if damaged.

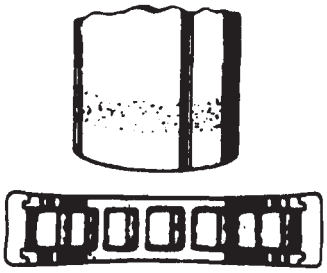

INDENTATIONS

Surface depressions on race and rollers caused by hard particles of foreign material.

Clean all parts and housings. Check seals and replace bearings if rough or noisy.

Replace shaft if damaged.

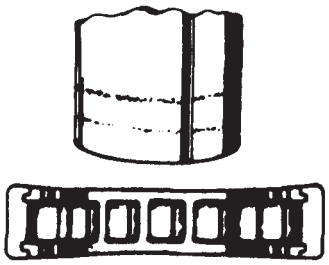

SINGLE EDGE PITTING

Flaking of surface metal resulting from fatigue, usually at one edge of race and rollers.

Replace bearing - clean all related parts.

Replace shaft if damaged.

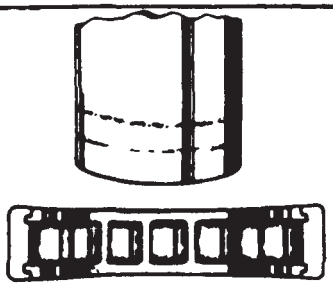

DOUBLE EDGE PITTING

Flaking of surface metal resulting from fatigue, usually at both edges of race and rollers.

Replace bearing - clean all related parts.

Replace shaft if damaged.

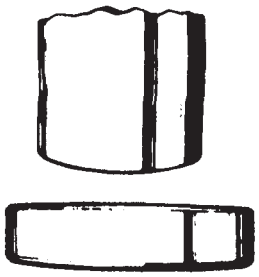

MISALIGNMENT

Replace bearing and make sure races are properly seated.

Replace shaft if bearing operating surface is damaged.

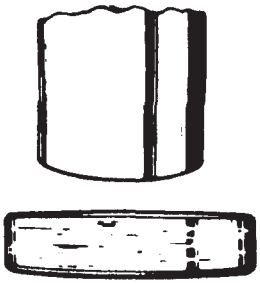

FRETTAGE

Corrosion set up by small relative movement of parts with no lubrication.

Replace bearing. Clean related parts. Check seals and check for proper fit and lubrication.

Replace shaft if damaged.

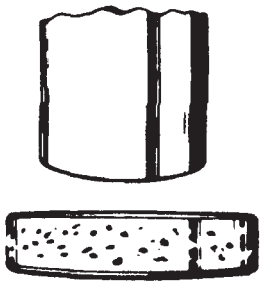

SMEARS

Smearing of metal due to slippage. Slippage can be caused by poor fits, lack of lubrication, overheating, overloads or handling damage.

Replace bearings, clean related parts and check for proper fit and lubrication.

S0205

Figure 5—Bearing Diagnosis

DIAGNOSIS OF REAR AXLE NOISE (CONT.)

PROBLEM	POSSIBLE CAUSE	CORRECTION
Noise In Drive	1. Excessive pinion to ring gear backlash. 2. Worn pinion and ring gear. 3. Worn pinion bearings. 4. Loose pinion bearings. 5. Excessive pinion end play. 6. Worn differential bearings. 7. Loose differential bearings. 8. Excessive ring gear run-out. 9. Low oil level. 10. Wrong or poor grade oil. 11. Bent axle housing.	1. Adjust 2. Replace. 3. Replace. 4. Adjust. 5. Adjust. 6. Replace. 7. Adjust. 8. Replace. 9. Replenish. 10. Replace. 11. Replace.
Noisy When Coasting	1. Axle noise heard on drive will usually be heard also on coasting although not as loud. 2. Pinion and ring gear too tight (audible when slowing down and disappears when driving).	1. Adjust or replace. 2. Adjust.
Intermittent Noise	1. Warped ring gear. 2. Loose differential case bolts.	1. Replace. 2. Tighten.
Constant Noise	1. Flat spot on pinion or ring gear teeth. 2. Flat spot on bearing. 3. Worn pinion splines. 4. Worn axle shaft dowel holes. 5. Worn hub studs. 6. Bent axle shaft.	1. Replace. 2. Replace. 3. Replace. 4. Replace. 5. Replace. 6. Replace.
Noisy On Turns	1. Worn differential side gears and pinions. 2. Worn differential spider. 3. Worn axle shaft splines.	1. Replace. 2. Replace. 3. Replace.
		D0127

DIAGNOSIS OF LOCKING DIFFERENTIAL

1. Place the vehicle on a frame-contact hoist, allowing free rotation of the rear wheels.
2. Raise the hoist until the wheels clear the floor. Holding one wheel stationary, slowly rotate the other wheel approximately 1/2 revolution per second in both the forward and reverse directions. Wheel should rotate freely. If both wheels attempt to turn together, the differential is locking and is broken.
3. Raise hoist to maximum height with one person in the vehicle.
4. Start the engine, making sure that the engine is set at the proper low idle speed.
5. With automatic transmission, apply the brake, then place the transmission in drive. With manual transmission, depress the clutch and place the transmission in first gear.
6. Have an assistant lock one rear wheel by pulling one parking brake cable from under the vehicle.
7. With the engine at low idle, slowly release the service brakes or slowly engage clutch, as required.
8. The locked rear wheel will remain stationary and the free wheel will begin turning. It is important that the service brakes or clutch be released slowly enough to start the free wheel turning and allow the free wheel to gradually increase in speed. As the speed of the free wheel is increased, the differential will lock, causing the rotating wheel to stop or both wheels to turn at the same speed. The engine may stall if equipped with a manual transmission. It may be necessary to accelerate engine until approximately 10 mph/16 kmh is indicated on vehicle speedometer to cause differential lock. If indicated speed can be increased beyond 20 mph/32 kmh without causing differential lock, the unit is not functioning properly. Rapid release of the brakes or clutch, or rapid acceleration of engine will invalidate test.
9. Lock opposite rear wheel and repeat the procedure.

DIAGNOSIS OF LOCKING REAR AXLE

PROBLEM	POSSIBLE CAUSE	CORRECTION
Does Not Lock	1. Little or not spring preload on the latching bracket. 2. Flyweights on the governor assembly stuck closed. 3. Broken drive teeth on the governor and/or cam gear assembly. 4. Broken clutch plates.	1. Replace the governor assembly and the latching bracket. 2. Replace the governor assembly and the latching bracket. 3. Replace the cam plate, governor assembly and latching bracket. 4. Replace the clutch plates and the wave spring.
Locks In Turns	1. Governor assembly tight in case. 2. Broken or weak governor flyweight spring. 3. Flyweight in governor assembly stuck open. 4. Broken cam plate and/or governor drive teeth.	1. Free up the governor assembly. 2. Replace the governor assembly and the latching bracket. 3. Replace the governor assembly and the latching bracket. 4. Replace the cam plate, governor assembly and latching bracket.
Chatters In Turns	1. Lubricant contaminated. 2. Clutch plates deteriorated.	1. Drain lube when hot. Wipe carrier clean. Refill with lube specified in MAINTENANCE AND LUBRICATION (SECTION 0B). 2. Replace clutch plates.
Noise (In Addition To Normal Clutch Engagement)	1. Broken clutch plates. 2. Broken thrust block. 3. Damaged case. 4. Broken differential gears.	1. Replace clutch plates. 2. Replace thrust block with a block of identical thickness. Check closely for other damage. 3. Replace unit. 4. Replace gears.
		D0128

DIAGNOSIS OF PINION FLANGE

PINION FLANGE RUNOUT MEASUREMENT

Tools Required:
- J 35819 Pinion Flange Runout Gage
- J 23409 Dial Indicator Extension
- J 8001 Dial Indicator Set

1. Place the vehicle on a hoist, allowing free rotation of the rear wheels.

Important

It is essential that the positions of all driveline components relative to the propeller shaft and axles be observed and *ACCURATELY REFERENCE MARKED PRIOR TO DISASSEMBLY.* These components include the propeller shafts, drive axles, pinion flanges output shafts, etc. *ALL COMPONENTS MUST BE REASSEMBLED IN THE EXACT RELATIONSHIP TO EACH OTHER AS THEY WERE WHEN REMOVED.* Additionally, the published specifications and torque values, as well as any measurements made prior to disassembly must be followed.

2. Remove the propeller shaft from the pinion flange. Refer to SECTION 4A in this manual.
   - Secure the propeller shaft up and out of the way so as not to put unnecessary stress on the universal joints.
3. Install J 35819 and J 8001 or equivalent (figure 6).
   - After set up, set the dial indicator back to zero. Refer to SECTION 0C.
4. Rotate the pinion flange 360 degrees. Record the highest and lowest readings and add them together. At the points of greatest deflection (highest and lowest), mark the pinion flange at the dial indicator tab.
5. If pinion flange runout is 0.15 mm (0.006 in.) or less, no further action is required.
6. If pinion flange runout is over 0.15 mm (0.006 in.) but no greater than 0.38 mm (0.015 in.) and balance weight is at or near the low point of pinion flange runout indicator reading, no further action is required.
   - If balance weight is not at or near the low point of pinion flange runout, remove the weight. Reindex the pinion flange until runout is 0.25 mm (.010 in.) or less.

- If it is impossible to achieve 0.25 mm (0.010 in.) or less runout, install a new pinion flange and recheck for 0.25 mm (0.010 in.) or less runout. Service replacement pinion flanges are not equipped with balance weights and no weights should be added.

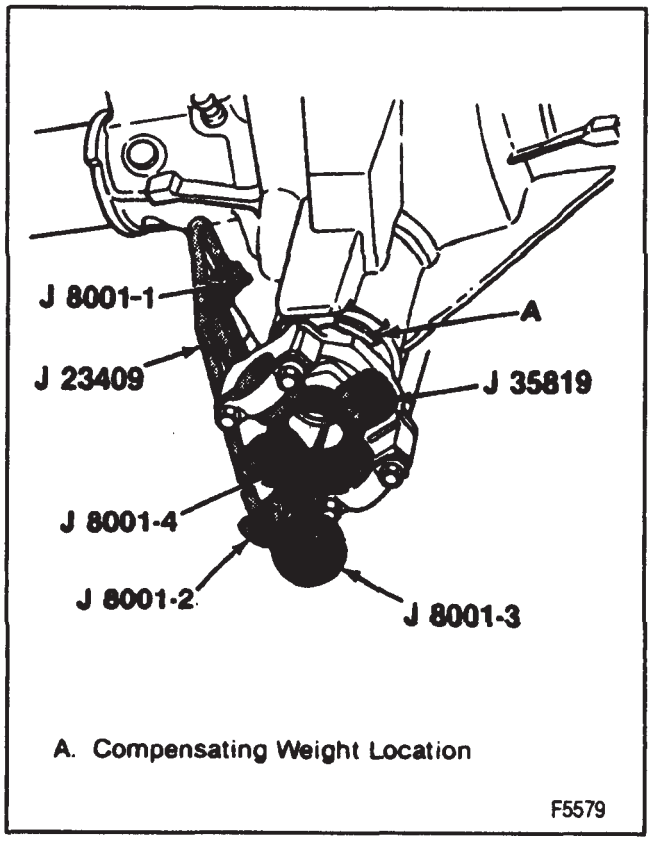

Figure 6—Pinion Flange Runout Measurement

ON-VEHICLE SERVICE

CARRIER COVER GASKET REPLACEMENT

Remove or Disconnect

1. Cover bolts.
   - Place a container under the carrier to catch the lubricant.
2. Cover from the axle housing.
   - Pry the cover loose.
3. Lubricant from the axle housing.

Clean

- Gasket surfaces on the axle housing and the carrier cover.

Install or Connect

1. New gasket.
2. Cover.

NOTICE: See "Notice" on page 4B1-1.

3. Bolts.

Tighten

- Bolts to 27 N·m (20 ft. lbs.) in a crosswise pattern.

4. Lubricant to a level within 9.5 mm (3/8 inch) of the filler plug hole.

AXLE SHAFT REPLACEMENT

Remove or Disconnect (Figures 7 and 8)

- Raise the vehicle.

1. Rear wheels and drums.
2. Carrier cover.
   - Clean all dirt from the carrier cover area.
3. Lubricant from the rear axle.
4. Pinion shaft lock bolt (20).
5. Pinion shaft.
6. "C" lock (21) from the button end of the axle shaft (25).
   - Push the axle shaft (25) in towards the center of the vehicle.

7. Axle shaft (25) from the axle housing (10).
   - Mark the shaft as left or right.

Install or Connect (Figures 7 and 8)

1. Axle shaft into the housing.
   - Be sure to use the correct axle on its corresponding side.
   - Be careful not to damage the oil seal (26).
   - The splines at the end of the axle shaft must engage with the splines of the rear axle side gear.

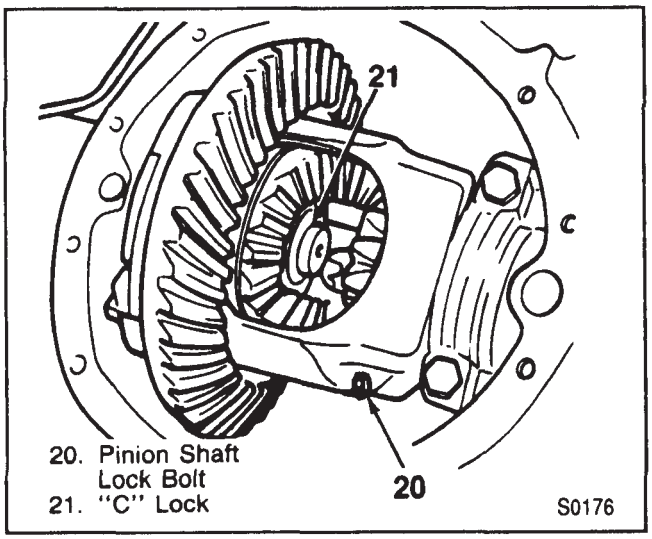

Figure 7—Pinion Shaft Lock Bolt

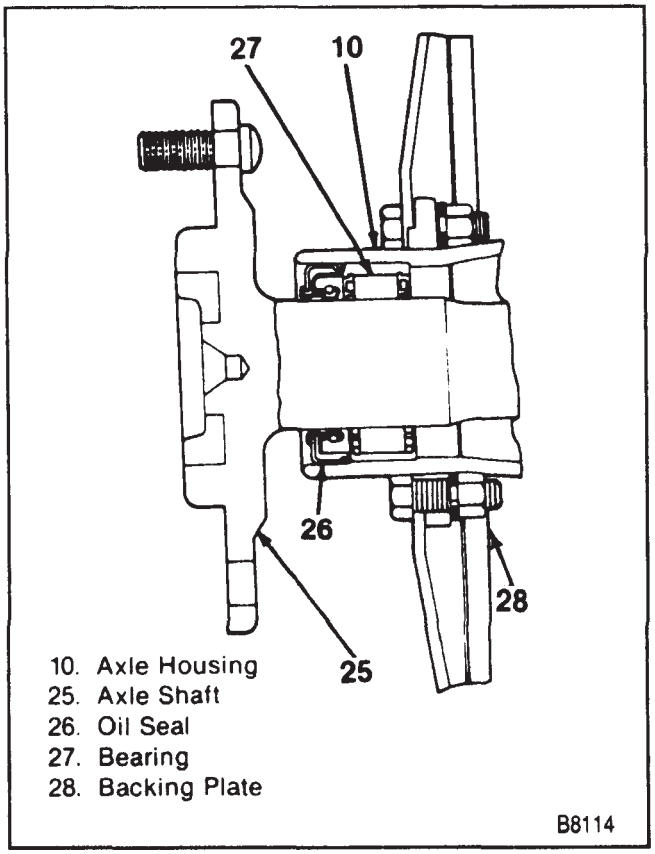

Figure 8—Axle Shaft Assembly

2. "C" lock (21) on the axle shaft.
   - Pull the axle shaft outward so the "C" lock seats in the counterbore of the rear axle side gear.
3. *Pinion shaft through the case and the pinions.*
   - Align the hole in the pinion shaft with the lock bolt hole.

NOTICE: See "Notice" on page 4B1-1.

4. New lock bolt (20).

Tighten

   - Lock bolt to 34 N·m (25 ft. lbs.).
5. New gasket on the carrier cover.
   - Refer to "Carrier Cover Gasket Replacement."
6. Axle lubricant. Refer to SECTION 0B.
7. *Brake drum and wheel.*
   - Check rear axle operation.

OIL SEAL AND/OR BEARING REPLACEMENT

Remove or Disconnect (Figures 7 through 9)

Tools Required:
J 2619 Slide Hammer
J 2619-4 Adapter
J 22813-01 Axle Bearing Puller

1. Axle shaft (25). Refer to "Axle Shaft Replacement".
2. Rear wheel speed sensor.
3. Seal (26) using a seal removal tool behind the steel case of the seal.
   - Be careful not to damage the housing.
4. Bearing (27) using J 2619, J 2619-4, and J 22813-01.
   - The tangs of the tool should engage the bearing outer race.

Install or Connect (Figures 7 through 11)

Tools Required:
J 23765 Axle Shaft Bearing Installer
J 23771 Axle Shaft Seal Installer

1. Bearing with J 23765 until the tool bottoms against the housing shoulder.
   - Lubricate the bearing with gear lubricant.
2. Seal using J 23771 until the seal is flush with the axle tube.

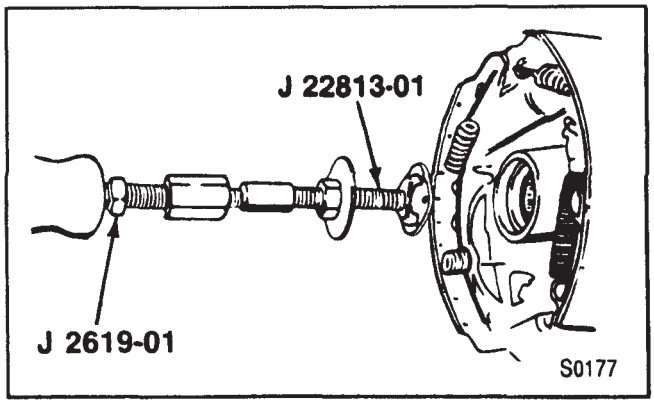

Figure 9—Removing the Axle Bearing

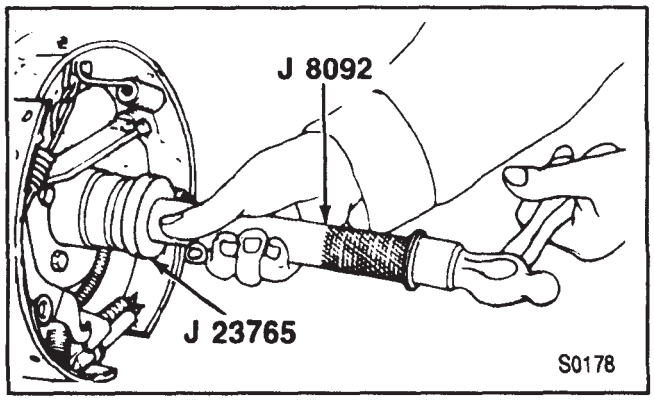

Figure 10—Installing the Axle Bearing

- Lubricate the seal lips with gear lubricant.

3. Rear wheel speed sensor.
4. Axle shaft.

PINION FLANGE REPLACEMENT

Remove or Disconnect (Figures 12 through 14)

NOTICE: For steps 3 and 5 see "Notice" on page 4B1-1.

Tool Required:
J 8614-01 Companion Flange Holder

1. Rear wheels and drums.
2. Bolts (3) and retainers (4).

Important

It is essential that the positions of all driveline components relative to the propeller shaft and axles be observed and *ACCURATELY REFERENCE MARKED PRIOR TO DISASSEMBLY.* These components include the propeller shafts, drive axles, pinion flanges, output shafts, etc. *ALL COMPONENTS MUST BE REASSEMBLED IN THE EXACT RELATIONSHIP TO EACH OTHER AS THEY WERE WHEN REMOVED.* Additionally, the published specifications and torque values, as well as any measurements made prior to disassembly must be followed.

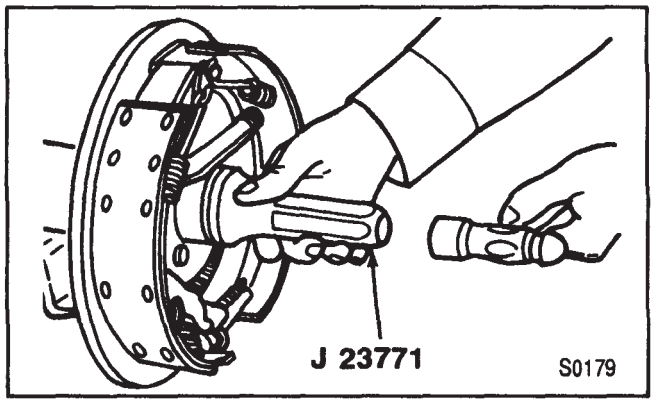

Figure 11—Installing the Axle Seal

- Accurately mark the installed position of the rear propeller shaft.

3. Propeller shaft.
   - Use a piece of tape to hold the bearing caps.
   - Secure the propeller shaft up and out of the way so as not to put unnecessary stress on the universal joints.

Measure

* Measure, using an inch-pound torque meter, the amount of torque required to turn the pinion. Record this measurement for reassembly (figure 12). This will give combined pinion bearing, seal, carrier bearing, axle bearing, and seal preload.

- Make an accurate alignment mark on the pinion stem, pinion flange, and pinion flange nut. Also record the number of exposed threads on the pinion stem for reference.

4. Pinion flange nut and washer.
   - Hold the pinion flange with J 8614-01.
5. Pinion flange using J 8614-01.
   - Have a suitable container to catch lubricant.

Install or Connect (figures 12 through 14)

Tool Required:
J 8614-01 Companion Flange Holder

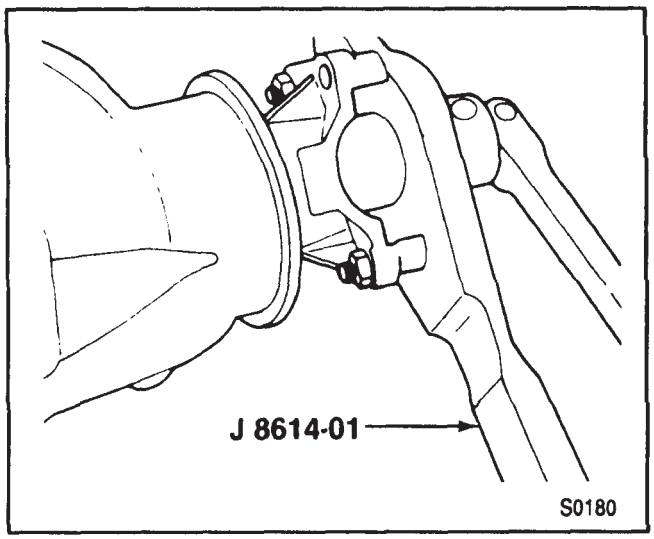

Figure 12—Removing the Pinion Nut

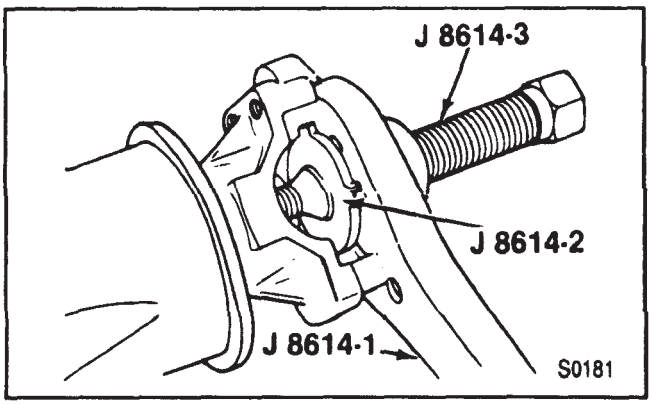

Figure 13—Removing the Pinion Flange

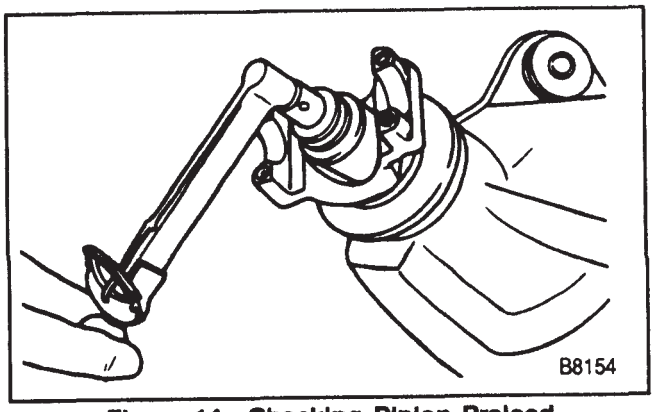

Figure 14—Checking Pinion Preload

1. Special seal lubricant (Part No. 1050169 or equivalent) to the outside of the pinion flange.
2. Pinion flange.

DO NOT HAMMER THE PINION FLANGE ONTO THE PINION STEM OR COMPONENT DAMAGE WILL OCCUR!

3. Washer and nut.

Tighten

- The nut on the pinion stem as close to the original marks as possible with out going past the mark. Use the reference mark and the thread count as reference.
- The nut a little at a time and turn the pinion flange several times after each tightening to set the rollers.

Measure

- Using an inch-pound torque meter, the torque required to rotate the pinion. Compare this with the required rotating torque recorded earlier. Continue tightening and measuring a little at a time until the same preload is achieved.
- Align the propeller shaft with the alignment marks made previously.

4. Propeller shaft.
5. Retainers and bolts.

Tighten

- Bolts to 37 N·m (27 ft. lbs.).

6. Drums and wheels.
7. Lubricant to the rear axle as necessary.

PINION OIL SEAL REPLACEMENT

Remove or Disconnect (Figures 12 through 14)

Tool Required:
J 8614-01 Companion Flange Holder

1. Bolts (3) and retainers (4).

Important

It is essential that the positions of all drive-line components relative to the propeller shaft and axles be observed and *ACCURATELY REFERENCE MARKED PRIOR TO DISASSEMBLY.* These components include the propeller shafts, drive axles, pinion flanges, output shafts, etc. *ALL COMPONENTS MUST BE REASSEMBLED IN THE EXACT RELATIONSHIP TO EACH OTHER AS THEY WERE WHEN REMOVED.* Additionally, the published specifications and torque values, as well as any measurements made prior to disassembly must be followed.

- Accurately mark the installed position of the propeller shaft and pinion flange so they can be reassembled in the same position.

2. Propeller shaft from the pinion flange.
   - Use a piece of tape to hold the bearing caps.
   - Secure the propeller shaft up and out of the way so as not to put unnecessary stress on the universal joints.
   - Make an accurate alignment mark on the pinion stem, pinion flange, and pinion flange nut. Also record the number of exposed threads on the pinion stem for reference.

Measure

Measure, using an inch-pound torque meter, the amount of torque required to turn the pinion. Record this measurement for reassembly (figure 14). This will give combined pinion bearing, seal, carrier bearing, axle bearing, and seal preload.

3. Pinion flange nut and washer.
   - Use J 8614-01 to hold the pinion flange.
4. Pinion flange.
   - Have a suitable container in place to catch lubricant.
5. Oil seal using a seal removal tool.
   - Do not damage the carrier.

Inspect

1. Seal surface of the pinion flange for tool marks, nicks, or damage such as a groove worn by the seal. Replace the flange if necessary. Refer to "Pinion Flange Replacement."
2. Carrier bore for burrs that might cause leaks around the outside of the seal.

Install or Connect (Figures 12 through 15)

NOTICE: For steps 4 and 6 see "Notice" on page 4B1-1.

Tools Required:
J 8614-01 Companion Flange Holder
J 23911 Pinion Oil Seal Installer

1. New seal using J 23911.
2. Special seal lubricant (Part No. 1050169 or equivalent) to the outside of the pinion flange and the sealing lip of the new seal.

3. Pinion flange.

DO NOT HAMMER THE PINION FLANGE ONTO THE PINION STEM OR COMPONENT DAMAGE WILL OCCUR!

NOTICE: See NOTICE on page 4B-1.

4. Washer and nut.

Tighten

- The nut on the pinion stem as close to the original marks as possible with out going past the mark. Use the reference mark and the thread count as reference.
- The nut a little at a time and turn the pinion flange several times after each tightening to set the rollers.

Measure

- Using an inch-pound torque meter, the torque required to rotate the pinion. Compare this with the required rotating torque recorded earlier. Continue tightening and measuring a little at a time until the same preload is achieved.
- Align the propeller shaft with the alignment marks made previously.
  — Use J 8614-01 to hold the pinion flange.

5. Propeller shaft to the pinion flange.
6. Bolts (3) and retainers (4).

Tighten

- Bolts to 37 N·m (27 ft. lbs.).

AXLE VENT HOSE REPLACEMENT

The axle vent assembly is located on the right side of the axle carrier.

Remove or Disconnect (Figure 1)

1. Vent clamp bolt.
2. Vent hose (7) from the axle nipple.
3. Vent assembly from the vent hose (7).
4. Vent hanger clip from the vent hose (7).

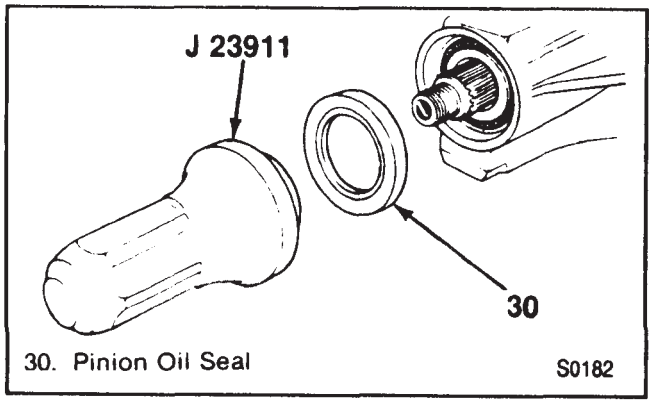

Figure 15—Installing the Pinion Oil Seal

5. Hose clamp from the vent hose (7).

Install or Connect (Figure 1)

- Use a neoprene type replacement vent hose.

1. Hose clamp to the vent hose (7).
2. Vent hanger clip to the vent hose (7).
3. Vent assembly to the vent hose (7).
4. Vent hose (7) to the axle nipple.
   - Make sure the vent clamp is installed over the axle nipple and that the hose is not twisted or kinked.

NOTICE: See "NOTICE" on page 4B1.

5. Vent clamp bolt (12).

AXLE HOUSING REPLACEMENT

Remove or Disconnect (Figure 1)

- Raise the vehicle and support it at the frame.
  - The hoist must remain under the rear axle housing.

1. Rear wheels and drums.
2. Shock absorber nuts (1) and washers (11).
3. Shock absorbers (2) from the anchor plates (12).
4. Bolts (3) and retainers (4) from the pinion flange (5).

Important

It is essential that the positions of all drive-line components relative to the propeller shaft and axles be observed and *ACCURATELY REFERENCE MARKED PRIOR TO DISASSEMBLY.* These components include the propeller shafts, drive axles, pinion flanges, output shafts, etc. *ALL COMPONENTS MUST BE REASSEMBLED IN THE EXACT RELATIONSHIP TO EACH OTHER AS THEY WERE WHEN REMOVED.* Additionally, the published specifications and torque values, as well as any measurements made prior to disassembly must be followed.

- Mark the propeller shaft and the pinion flange.
- Secure the propeller shaft up and out of the way so as not to put unnecessary stress on the universal joints.

5. Brake pipes at the axle housing.
6. Brake pipes at the backing plates.
7. Rear wheel speed sensor connectors at the junction block.
8. Nuts (8) and washers (11).
9. U-bolts (6) and anchor plates (12).
10. Vent hose (7) from the axle housing (10).
    - Move the axle from above the springs.
    - Lower the axle from the vehicle using the hoist.

Install or Connect (Figure 1)

NOTICE: For steps 5, 6, 11, and 13 see "Notice" on page 4B1-1

1. Axle into the vehicle using a hoist.
2. Vent hose (7) to the axle housing (10).
3. U-bolts (6) and anchor plates (12).
4. Nuts (8) and washers (11).

Tighten

- Nuts (8) to 55 N·m (41 ft. lbs.).

5. Brake pipes to the backing plate.
6. Brake pipes at the axle housing.
   - Bleed the brake system. Refer to SECTION 5A2.
7. Rear wheel speed connectors to the junction block.
8. Propeller shaft.
   - Line up the previously made marks on the propeller shaft with the marks on the pinion flange.
9. Retainers (4) and bolts (3) to pinion flange (5).

Tighten

- Bolts (3) to 37 N·m (27 ft. lbs.).

10. Shock absorbers to the anchor plates.
11. Nuts (1).

Tighten

- Nuts (1) to 100 N·m (74 ft. lbs.).

12. Rear drums, tires and wheels.
13. Lubricant to a level within 9.5 mm (3/8 inch) of the filler plug hole.

SPECIFICATIONS

	N·m	Ft. Lbs.
Inner U-Bolt Nuts	55	41
Outer U-Bolt Nuts	65	48
Propeller Shaft Bolts	37	27
Lower Shock Absorber Bolts	100	74
Carrier Cover Bolts	27	20
Pinion Shaft Lock Bolt	34	25

T2067

SPECIAL TOOLS

1 J-2619-01

2 J-8614-01

3 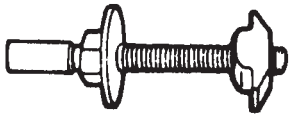 J-22813-01

4 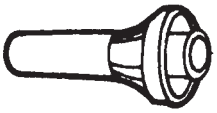 J-23911

5 J-23771

6 J-23765

7 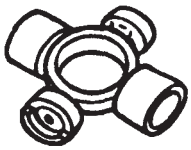 J 35819

8 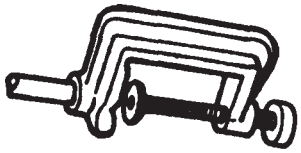 J 8001-1

9 J 8001-2

10 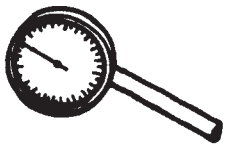 J 8001-3

11 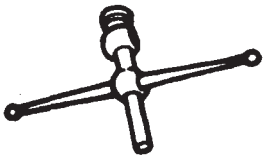 J 8001-4

12 J 23409

1. Slide Hammer
2. Companion Flange Holder
3. Axle Bearing Puller
4. Pinion Oil Seal Installer
5. Axle Shaft Seal Installer
6. Axle Shaft Bearing Installer
7. Companion Flange Runout Gauge
8. Dial Indicator Clamp
9. Dial Indicator Sleeve
10. Dial Indicator
11. Hole Attachment
12. Dial Indicator Extension

F5578

SECTION 4C

FRONT DRIVING AXLE

NOTICE: When fasteners are removed, always reinstall them at the same location from which they were removed. If a fastener needs to be replaced, use the correct part number fastener for that application. If the correct part number fastener is not available, a fastener of equal size and strength (or stronger) may be used. Fasteners that are not reused, and those requiring thread locking compound will be called out. The correct torque value must be used when installing fasteners that require it. If the above conditions are not followed, parts or system damage could result.

CONTENTS

SUBJECT	PAGE
General Description	4C- 1
Front Axle Noise Diagnosis	4C- 2
Determining The Source of the Noise	4C- 2
On-Vehicle Service	4C- 3
Shaft and Tube Assembly Replacement	4C- 3
Differential Pilot Bearing Replacement	4C- 5
Differential Carrier Assembly Replacement	4C- 6
Differential Carrier Bushing Replacement	4C- 8
Front Axle Vent Hose	4C- 9
Shift Cable Replacement	4C- 9
Vacuum Actuator Replacement	4C-11
Pinion Flange Replacement	4C-12
Pinion Oil Seal Replacement	4C-12
Diagnosis of Drive Axles	4C-14
Drive Axle (Halfshaft) Replacement	4C-14
Outer Joint/Boot Replacement	4C-17
Inner CV Joint/Boot (Tripot Housing) Replacement	4C-19
Specifications	4C-23
Special Tools	4C-23

GENERAL DESCRIPTION

The front driving axle on four-wheel drive (4WD) models utilizes a central disconnect type front axle/transfer case system which allows shifting in and out of 4WD when the vehicle is moving under most driving conditions.

The differential is used to allow the wheels to turn at different rates of speed while the front axle continues to transmit the driving force. This prevents tire scuffing when going around corners and prevents premature wear on internal axle parts.

The differential case is supported in the axle housing by two tapered roller bearings. The differential and ring gear are located in relationship to the pinion by using threaded adjusters. The ring gear is bolted to the differential case with left-hand thread bolts.

The pinion gear is supported by two tapered roller bearings. The pinion depth is set by a shim pack located between the gear end of the pinion and the roller bearing that is pressed onto the pinion. The pinion bearing preload is set by crushing a collapsible spacer between the pinion bearings in the axle housing.

The axle identification code is stamped on the top of the carrier case, along the edge of the machined face of the left half.

The drive axles are completely flexible assemblies, consisting of inner and outer constant velocity (CV) joints connected by an axle shaft. The inner CV joint is a "tri-pot" design, which is completely flexible, and also can move in and out. The outer CV joint is a "Rzeppa" design which is also flexible, but cannot move in and out.

FRONT AXLE NOISE DIAGNOSIS

Any gear-driven unit produces a certain amount of noise that is normal and cannot be eliminated by conventional repairs or adjustment. Slight noise that is heard only at a certain speed or under unusual or remote conditions is acceptable. For example, this noise tends to reach a peak at speeds from 40 to 60 miles per hour (60 to 100 km/h) depending on road and load conditions, or on gear ratio and tire size, and does not indicate trouble in the axle assembly.

When an axle is suspected of being noisy, it is advisable to make a thorough test to determine whether the noise originates in the tires, road surface, wheel bearings, engine, transmission, propeller shaft, or axle assembly. Raising tire pressure to eliminate tire noise (although this will not silence tread noise of mud and snow tires), and listening for the noise at varying speeds and road surfaces, on drive, float, and coast conditions will help to locate the source of the noise.

DETERMINING THE SOURCE OF THE NOISE

Road Noise —Some road surfaces, such as brick or rough-surfaced concrete cause noise which may be mistaken for tire or axle noise. Driving on a different type of road, such as smooth asphalt or dirt, will quickly show whether the road surface is the cause of the noise. Road noise is usually the same on drive or coast.

- Check tires for irregular wear.
- Check tire pressure.
- Check axle lubricant level.
- Drive to warm up the front axle.
- Test at various speeds in drive, float, coast and while cornering.

Tire Noise —Tire noise may easily be mistaken for axle noise. Tire noise, however, changes with different road surfaces. Axle noise does not. Temporarily inflating all tires to 345 kPa (50 psi) pressure **for test purposes only** will materially alter noise caused by tires but will not affect noise caused by the axle. Axle noise usually stops when coasting at speeds under 30 miles per hour; however, tire noise continues with lower tone as the vehicle speed is reduced.

- Change the tire pressure to minimize noises.
- Drive over different road surfaces.
- Smooth black-top minimizes tire noise.
- Cross switch the tires, if necessary.
- Snow tire treads and studs cause added noises.

Engine and Transmission Noises —To determine which unit is causing the noise, take note of approximate vehicle speeds and conditions under which the noise is most pronounced, then stop the vehicle in a quiet place to stop interfering noises. With the transmission in neutral, run the engine slowly up and down the engine speeds corresponding to the vehicle speed at which the noise was most pronounced. If a similar noise is produced with the vehicle standing, it is caused by the engine or transmission and not the axle.

- Drive slightly above the speed where the noise occurs, place transmission in neutral.
- Let the engine speed drop to idle.
- Stop the vehicle.
- Run the engine at various speeds.

Wheel Bearing Noise —A brinelled wheel bearing causes a knock or click approximately every two revolutions of the wheel, since the bearing rollers do not travel at the same speed as the axle and wheel. With the wheels jacked up, spin the wheels by hand while listening at the hubs for evidence of a rough or brinelled wheelbearing, or loose bearings.

- Drive the vehicle at low speed on a smooth road.
- Turn the vehicle to develop left and right motions, traffic permitting.
- Noise should change due to cornering loads.
- Jack up the wheels to verify roughness at the wheels.

Gear Noise —There are two basic types of gear noise. The first type is produced by broken, bent, or forcibly damaged gear teeth, is usually quite audible over the entire speed range and presents no difficulty in diagnosis. For example, hypoid gear tooth scoring generally results from the following: insufficient lubricant, improper lubricant, improper break-in, wrong lubricant, insufficient gear backlash, improper ring and pinion alignment, or loss of drive pinion nut torque. The scoring will progressively lead to complete erosion of the gear tooth, or gear tooth pitting and then eventual fracture if the initial scoring is not corrected. Another cause of hypoid gear fracture is extended overloading of the gear set, which will produce fatigue fracture, or shock loading, which will result in sudden failure.

The second type of gear noise pertains to the mesh pattern of the gear teeth. This form of abnormal gear noise can be recognized because it produces a cycling pitch (whine) and will be very pronounced in the speed range at which it occurs, appearing under either drive, float, or coast conditions. Gear noise tends to peak in a narrow speed range or ranges, and will tend to remain constant in pitch. Bearing noise will vary in pitch with vehicle speeds.

- Rough running or a whine noise should increase with speed.
- Noise pitch should be higher than differential noise.
- Perform the test on a smooth road to minimize tire noises.
- Perform test at various speeds in drive, float, and coast.
- Rear pinion bearing noise may be louder on acceleration.
- Front pinion bearing noise may be louder on deceleration.

ON-VEHICLE SERVICE

SHAFT AND TUBE ASSEMBLY REPLACEMENT

Remove or Disconnect (Figures 1 through 4)

1. Negative battery cable.
2. Shift cable from the vacuum actuator. Refer to "Shift Cable Replacement" in this section.
   - Unlock the steering column so the linkage is free to move.
   - Raise the vehicle and support it with suitable safety stands.
3. Front wheels.
4. Engine drive belt shield.
5. Front axle skid plate; if equipped.
6. Right upper ball joint.
   - Support the right lower control arm.
   - Disconnect the ball joint as outlined in SECTION 3C.
   - Remove the support, so the control arm will hang free.
   - Insert a drift through the opening in the top of the brake caliper into the vanes in the brake rotor. This will keep the axle from turning.

Important

It is essential that the positions of all driveline components relative to the propeller shaft and axles be observed and *ACCURATELY REFERENCE MARKED PRIOR TO DISASSEMBLY.* These components include the propeller shafts, drive axles, pinion flanges, output shafts, etc. *ALL COMPONENTS MUST BE REASSEMBLED IN THE EXACT RELATIONSHIP TO EACH OTHER AS THEY WERE WHEN REMOVED.* Additionally, the published specifications and torque values, as well as any measurements made prior to disassembly must be followed.

7. Bolts (80 or 82) (figure 3). Then remove the drift from the brake rotor.
8. Wire from indicator switch (13).
9. Shift cable housing (11) and shift cable (10). Refer to "Shift Cable Replacement" in this section.
10. Bolts (90), nuts (92) and washers (91) (figure 4).
11. Remaining two upper bolts (6).
12. Shaft (1) and tube (5), by working it around the drive axle (81). Be careful not to allow the thrust washers (7 and 20), carrier connector (9), sleeve (22) or output shaft (23) to fall out of the carrier assembly or become damaged.

Disassemble (Figures 1 and 2)

Tool Required:
J 29369-2 Bearing Remover (or equivalent)

1. Shaft (1).
   - Hold the tube (5) in a vise by the mounting flange.
   - Tap the shaft out with a soft mallet.
2. Deflector (2).
3. Seal (3) using a seal removal tool.
4. Bearing (4). Use J 29369-2 (or a suitable bearing cup remover) and a slide hammer.
5. Shift cable housing seal (15). Drive out with a punch.

Assemble (Figures 1, 2, 6, and 7)

Tools Required:
J 33799 Shift Cable Housing Seal Installer
J 33844 Bearing Installer
J 33893 Shaft Seal Installer

1. Seal (15). Use J 33799 (figure 5).
2. Bearing (4). Use J 33844. When the tool is flush with the tube end, the bearing is installed to the proper depth. Lubricate the bearing with axle lubricant. Refer to SECTION 0B.
3. Seal (3). Use J 33893 (figure 6).
   - Drive the seal in until the seal flange is flush with the tube end.
   - Apply grease to the seal lips.
4. Deflector (2).
5. Shaft (1).

Clean (Figures 1 and 2)

- Sealing surfaces of tube (5) and carrier assembly with a chlorinated solvent.

Install or Connect (Figures 1 through 5, 8, and 9)

Tool Required:
J 33798 Hub Engagement Tool

- Apply a bead of sealer (GM part number 1052357 {Loctite 514} or equivalent) to the carrier sealing surface.
- Make sure the washer (24), output shaft (23), sleeve (22), thrust washer (20) and carrier connector (9) are in place in the carrier assembly.

1. Thrust washer (7) to the tube (5) as shown in figure 7. Use grease to hold it in place.
2. Shaft and tube assembly to the carrier.
3. Bolt (6) at the one o'clock position. Leave finger tight.
   - Pull the shaft and tube assembly down until the remaining bolts (6) can be installed.
4. Shift cable housing (11) and remaining bolts (6).

Tighten

- Bolts (6) to 48 N·m (36 ft. lbs.).

5. Bolts (90), washers (91), and nuts (92) (figure 4).

Tighten

- Nuts (92) to 75 N·m (55 ft. lbs.).

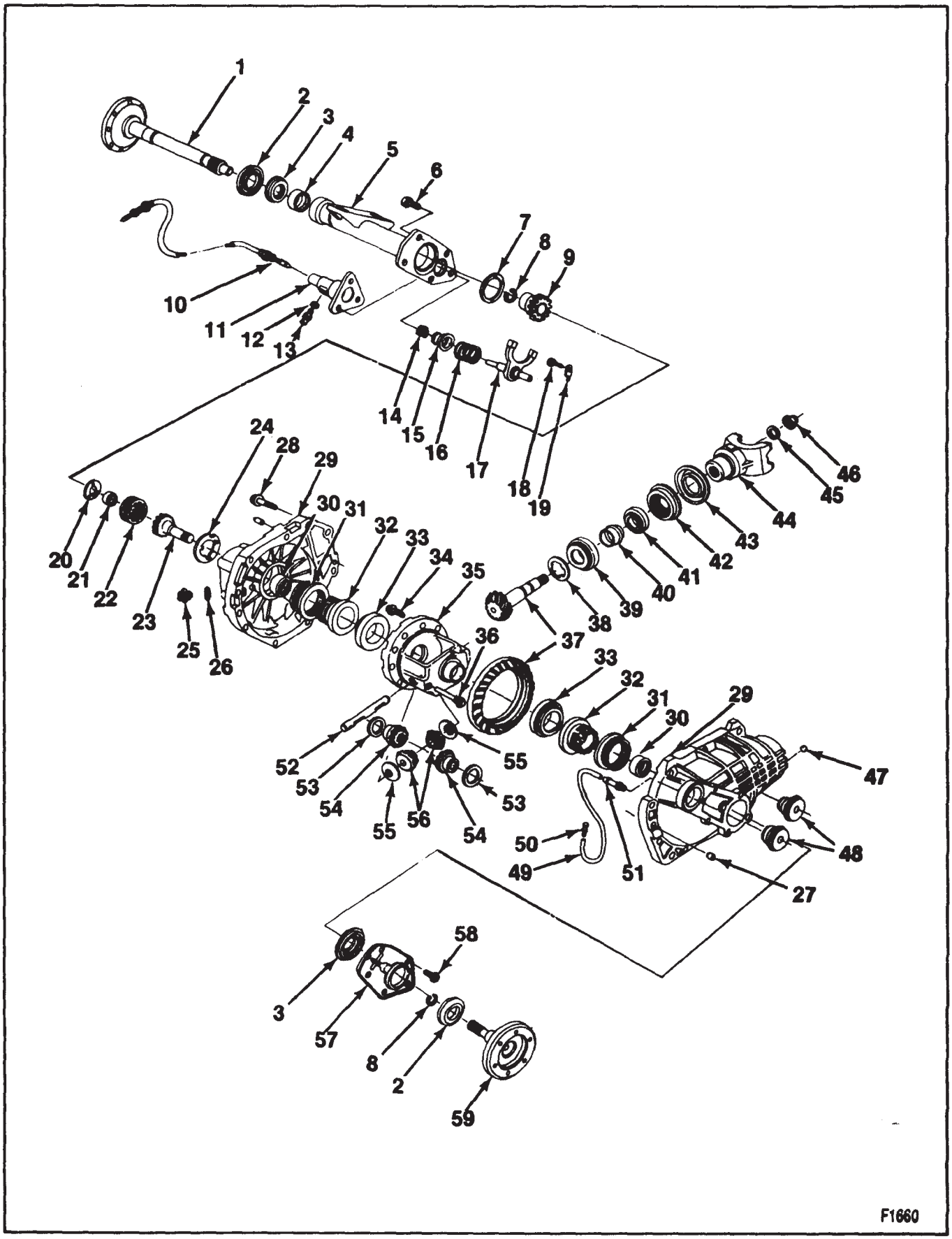

Figure 1—Carrier Assembly and Components

1. Shaft
2. Deflector
3. Seal
4. Bearing
5. Tube
6. Bolt
7. Thrust Washer
8. Retaining Ring
9. Carrier Connector
10. Shift Cable
11. Shift Cable Housing
12. Gasket
13. Indicator Switch
14. Spring
15. Seal
16. Spring
17. Shift Shaft and Fork
18. Bolt
19. Tab Washer
20. Thrust Washer
21. Differential Pilot Bearing
22. Sleeve
23. Output Shaft
24. Washer
25. Plug
26. Washer
27. Pin
28. Bolt
29. Carrier Case
30. Bearing
31. Insert
32. Sleeve
33. Side Bearing
34. Differential Case
36. Screw
37. Pinion
38. Shim
39. Bearing
40. Spacer
41. Bearing
42. Seal
43. Deflector
44. Flange
45. Washer
46. Nut
47. Plug
48. Bushing
49. Vent Hose
50. Vent
51. Fitting
52. Shaft
53. Thrust Washer
54. Side Gear
55. Thrust Washer
56. Differential Pinion Gear
57. Cover
58. Bolt
59. Shaft

F1661

Figure 2—Carrier Assembly and Components

Inspect

- Operation of shift mechanism. Use J 33798 (figure 8). Insert the tool into the shift fork and check for rotation of the axle shaft.

6. Shift cable (10). Refer to "Shift Cable Replacement" in this section.
7. Wire to the indicator switch (13).
8. Upper ball joint. Refer to FRONT SUSPENSION SECTION 3C.
9. Drive axle (81) to the shaft (1).
10. Bolts (80 Or 82) (figure 3).
    - Install one bolt finger tight.
    - Rotate the axle shaft to install the remaining bolts.
    - Hold the axle by inserting a drift in the top of the brake caliper and into the vanes in the brake rotor.

Tighten

- Bolts (80) to 80 N·m (60 ft. lbs.).
- Remove the drift from the brake rotor.

11. Front axle skid plate (if equipped).
12. Engine drive belt shield.
13. Front wheels.

Inspect

- Axle lubricant level, and add lubricant as necessary.
- Lower the vehicle.

14. Shift cable to the vacuum actuator. Refer to "Shift Cable Replacement."
15. Negative battery cable.

DIFFERENTIAL PILOT BEARING REPLACEMENT

Remove or Disconnect (Figures 1 and 2)

Tool Required:
J 34011 Pilot Bearing Remover

1. Shaft and tube assembly. Refer to "Shaft and Tube Assembly Replacement" in this section.

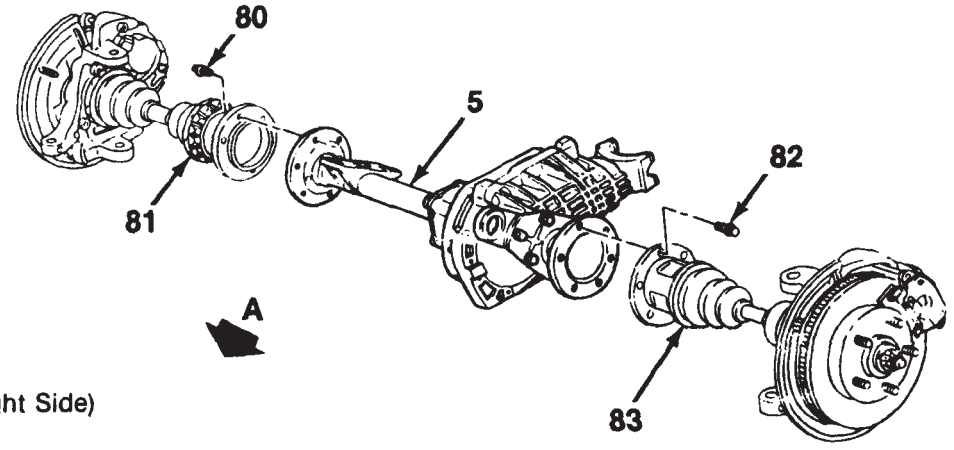

A. Forward
5. Tube
80. Bolt
81. Drive Axle (Right Side)
82. Bolt
83. Drive Axle (Left Side)

F1663

Figure 3—Drive Axles

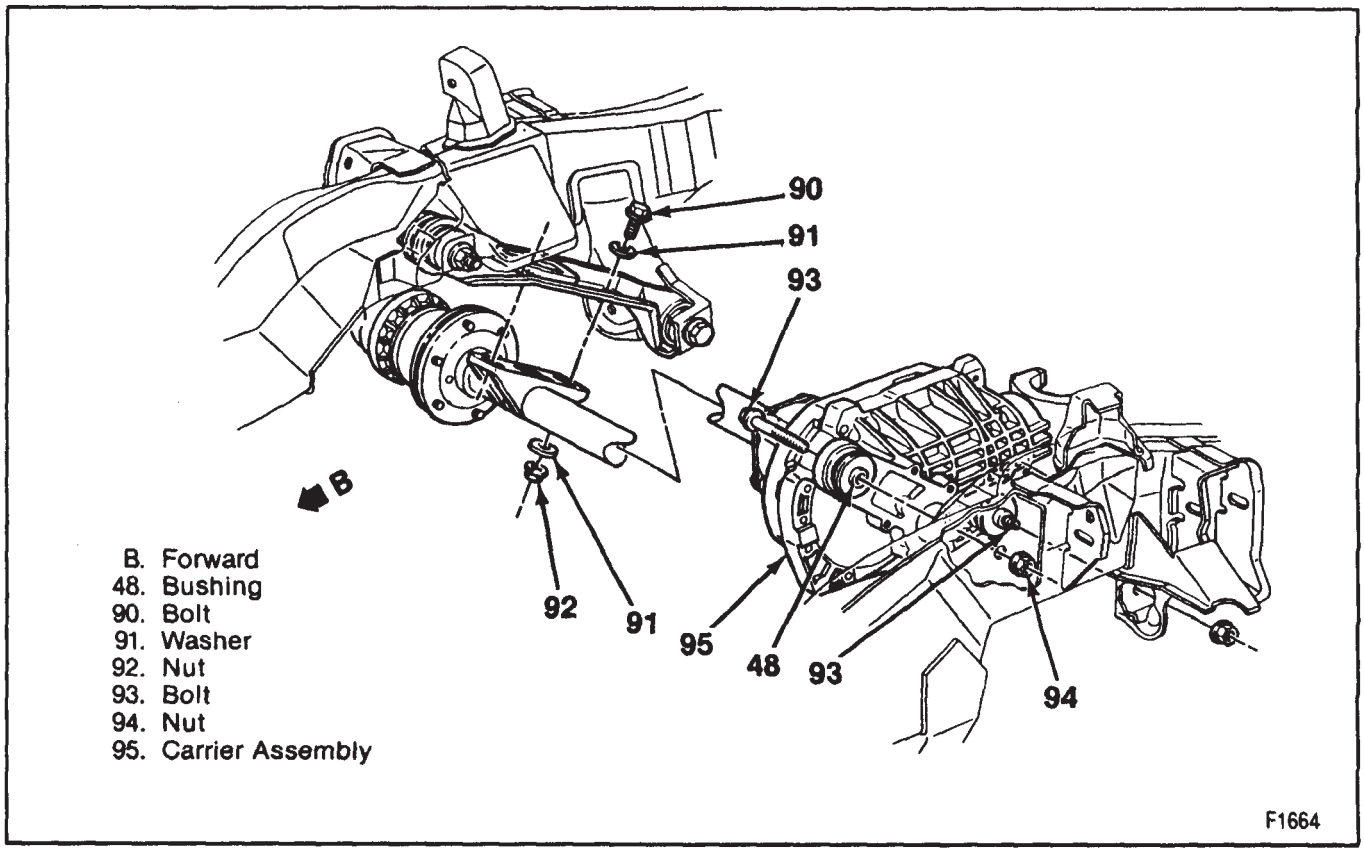

Figure 4—Carrier Assembly Installation

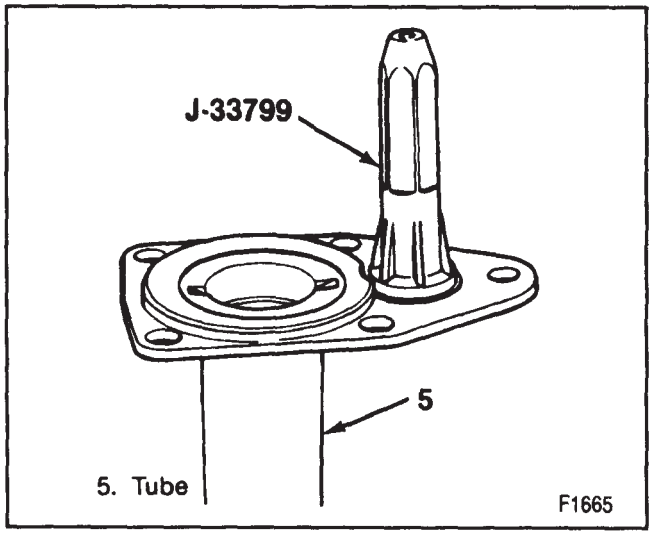

Figure 5—Installing the Shift Cable Housing Seal

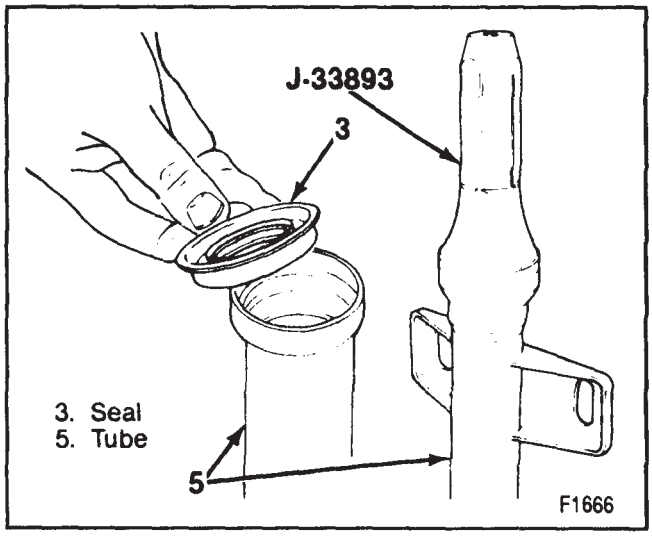

Figure 6—Installing the Shaft Seal

2. Differential pilot bearing (21). Use J 34011.

Install or Connect (Figures 1 and 2)

Tool Required:
J 33842 Pilot Bearing Installer

1. Differential pilot bearing (21). Use J 33842.
   - Lubricate the bearing with axle lubricant, as specified in SECTION 0B.
2. Shaft and tube assembly. Refer to "Shaft and Tube Assembly Replacement" in this section.

DIFFERENTIAL CARRIER ASSEMBLY REPLACEMENT

Remove or Disconnect (Figures 1 through 5, and 9)

- Unlock the steering column so the linkage is free to move.
- Disconnect the shift cable from the vacuum actuator.

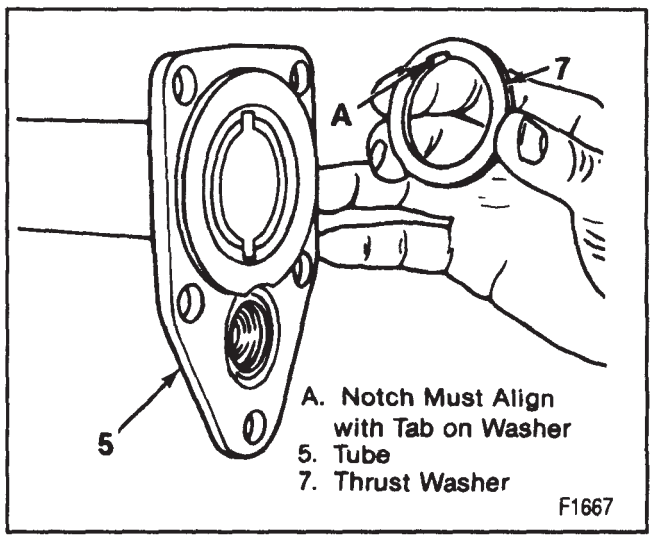

Figure 7—Installing the Thrust Washer

- Raise the vehicle and support it with suitable safety stands.

1. Front wheels.
2. Engine drive belt shield.
3. Front axle skid plate, if equipped.
4. Drain plug and flat washer (25 and 26).
   - Drain lubricant from carrier.
5. Right side lower shock bolt. Push shock up for access to output shaft bolts.
6. Wire from indicator switch (13).
7. Shift cable housing (11) and shift cable (10) from the carrier housing. Refer to "Shift Cable Replacement" in this section.
8. Vent hose (49).
9. Steering relay rod from idler arm and pittman arm. Refer to SECTION 3B3.
   - Pull the steering linkage forward.
   - Hold the left drive axle by inserting a drift in the top of the brake caliper and into the vanes in the brake rotor.

Important

It is essential that the positions of all drive-line components relative to the propeller shaft and axles be observed and *ACCURATELY REFERENCE MARKED PRIOR TO DISASSEMBLY.* These components include the propeller shafts, drive axles, pinion flanges, output shafts, etc. *ALL COMPONENTS MUST BE REASSEMBLED IN THE EXACT RELATIONSHIP TO EACH OTHER AS THEY WERE WHEN REMOVED.* Additionally, the published specifications and torque values, as well as any measurements made prior to disassembly must be followed.

10. Bolts (80 and 82) (figure 3).
    - Remove the drift from the brake rotor.
11. Bolts (90) and nuts (92).
12. Front prop shaft (figure 9).
    - Support both lower control arms with suitable stands at edge of stabilizer shaft. Lower vehicle until front end weight is resting on stands.
13. Bolts (93) and nuts (94) (figure 4).
    - Hold the upper nut with an 18 mm wrench inserted through the frame.
14. Carrier assembly (95). Roll the carrier counterclockwise while lifting up to gain clearance from the mounting ears.

Install or Connect (Figures 1, 2, 4, 5, and 9)

1. Carrier assembly (94) to the vehicle.
2. Bolts (93) and nuts (94) (figure 4).

Tighten

- Bolts (93) to 90 N·m (65 ft. lbs.) or nuts (94) to 75 N·m (55 ft. lbs.).

3. Front propeller shaft retainers (102) and bolts (101) (figure 9).

Tighten

- Bolts (101) to 20 N·m (15 ft. lbs.).

4. Bolts (80 and 82) (figure 3).

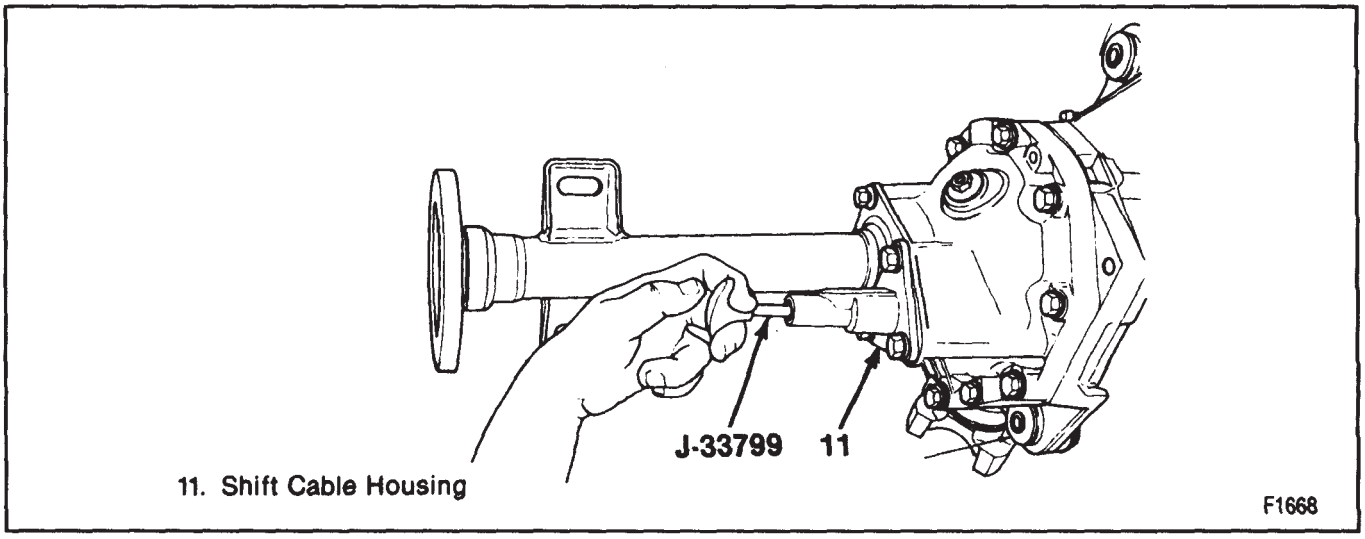

Figure 8—Checking the Shift Mechanism

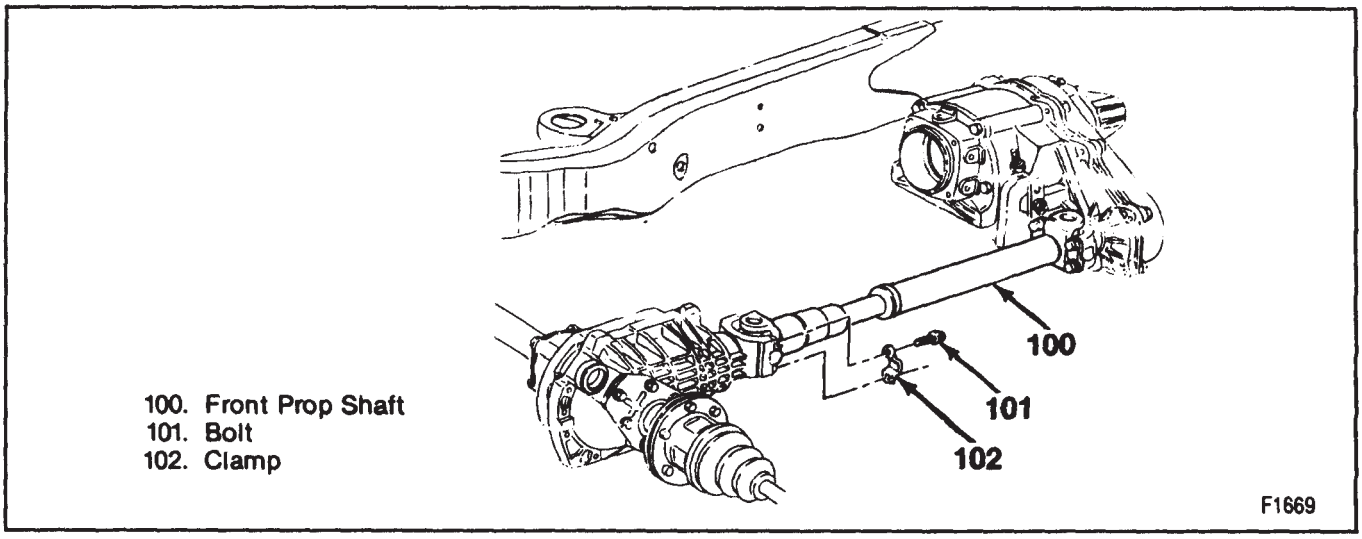

100. Front Prop Shaft
101. Bolt
102. Clamp

Figure 9—Front Propeller Shaft

- Install one bolt finger tight.
- Rotate the axle shaft to install the remaining bolts.
- Hold the axle by inserting a drift in the top of the brake caliper and into the vanes in the brake rotor.

Tighten

- Bolts to 80 N·m (60 ft. lbs.).
- Remove the drift from the brake rotor.

5. Vent hose (49).
6. Idler and pitman arms to steering relay rod. Refer to SECTION 3B3.
7. Shaft and tube assembly. Refer to "Shaft and Tube Assembly Replacement" in this section.
8. Indicator switch (13).
9. Shift cable to vacuum actuator.
10. Lower shock bolt and nut.

Tighten

- Bolt and nut to 73 N·m (54 ft. lbs.)

Inspect

- Axle lubricant level. Add lubricant as needed.

11. Drain plug (25) and flat washer (26)

Tighten

- Plug to 33 N·m (24 ft. lbs.)

12. Skid plate if equipped.
13. Engine drive belt sheild.
14. Tires and wheels.

DIFFERENTIAL CARRIER BUSHING REPLACEMENT

Remove or Disconnect (Figures 1, 2, and 10)

Tool Required:
J 33791 Bushing Remover and Installer Set

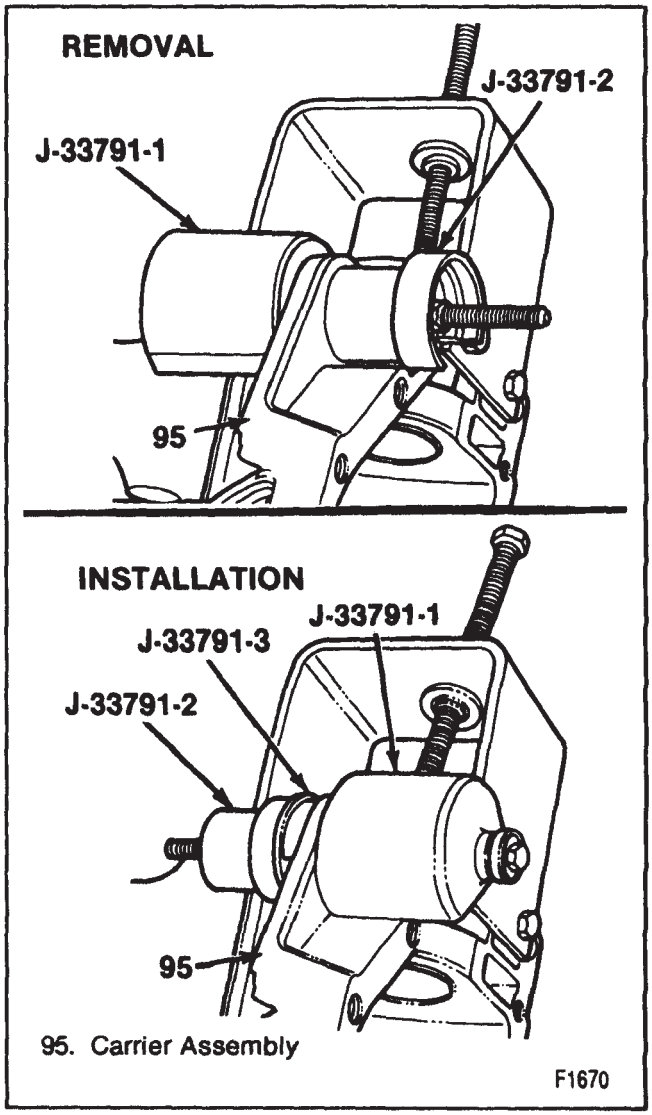

Figure 10—Replacing the Carrier Bushings

1. Differential carrier assembly. Refer to "Differential Carrier Assembly Replacement" in this section. Bushing (48). Use J 33791 (figure 10).

Install or Connect (Figures 1, 2, and 10)

Tool Required:
J 33791 Bushing Remover and Installer Set

1. Bushing (41). Use J 33791 (figure 10).

Important

- Be sure the spacer (J 33791-3) is correctly installed between the bushing and carrier ear to prevent the bushing from being pressed in too deeply.

2. Differential carrier assembly. Refer to "Differential Carrier Assembly Replacement" in this section.

FRONT AXLE VENT HOSE

When replacing the hose, make sure that it is routed as shown, is free of kinks, and is routed clear of sharp components (figure 11). Make sure the vent (50) is not plugged.

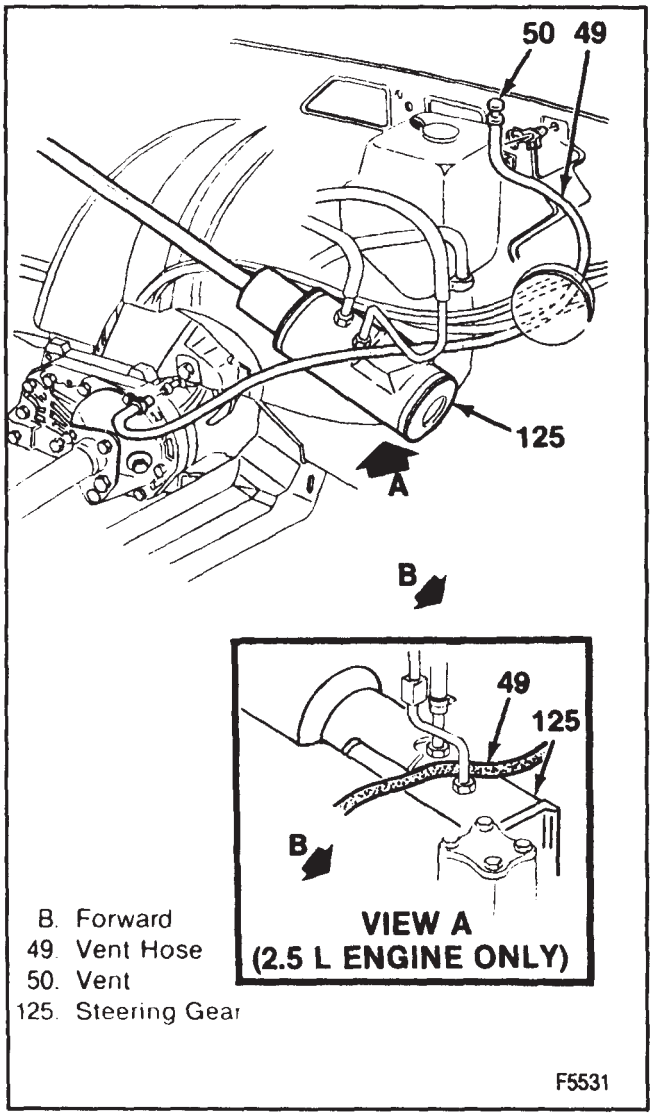

Figure 11—Vent Hose

SHIFT CABLE REPLACEMENT

Remove or Disconnect (Figures 12 through 15)

1. Shift cable (10) from the vacuum actuator (130).
   - Bend the tang on the lock spring (133) as shown in figure 13.
   - Push the diaphragm in to release the cable end.
   - Squeeze the two locking fingers of the cable ferrule with pliers (figure 13). Then pull the cable from the bracket.
   - Raise the vehicle and support it with suitable safety stands.
2. Bolts (6) (figure 14).
   - DO NOT unscrew the coupling nut (132) at this time.
3. Shift cable housing (11) from the carrier assembly. Pull out about 20 mm (3/4 inch) (figure 6).
4. Cable end from the shift fork shaft (17). Bend the tang of the locking spring (137) as shown in figure 15, then pull the cable end from the shift fork shaft.
5. Shift cable (10) from the shift cable housing (11) by unscrewing the coupling nut (132).
6. Shift cable from the vehicle.

Install or Connect (Figures 12, 16, and 17)

1. Shift cable housing (11) to the carrier assembly.
2. Bolts (6).

Tighten

- Bolts (6) to 48 N.m (36 ft. lbs.).

3. Shift cable (10) to the shift cable housing (figure 16).
   - The shift cable must be attached to the housing before it is routed.
   - Guide the cable end (136) through the hole in the shift cable housing (figure 16).
   - Push the cable end into the shift fork shaft (17). It should snap into place.
   - Thread the coupling nut (132) into the housing by hand to avoid cross threading.

Tighten

- Coupling nut to 10.0 N.m (90 in. lbs.).
- Lower the vehicle.

4. Shift cable to the vehicle. Route as shown in figure 12.
5. Shift cable to the vacuum actuator (130). Push the cable into the hole in the bracket. The cable end and ferrule should snap together (figure 17).

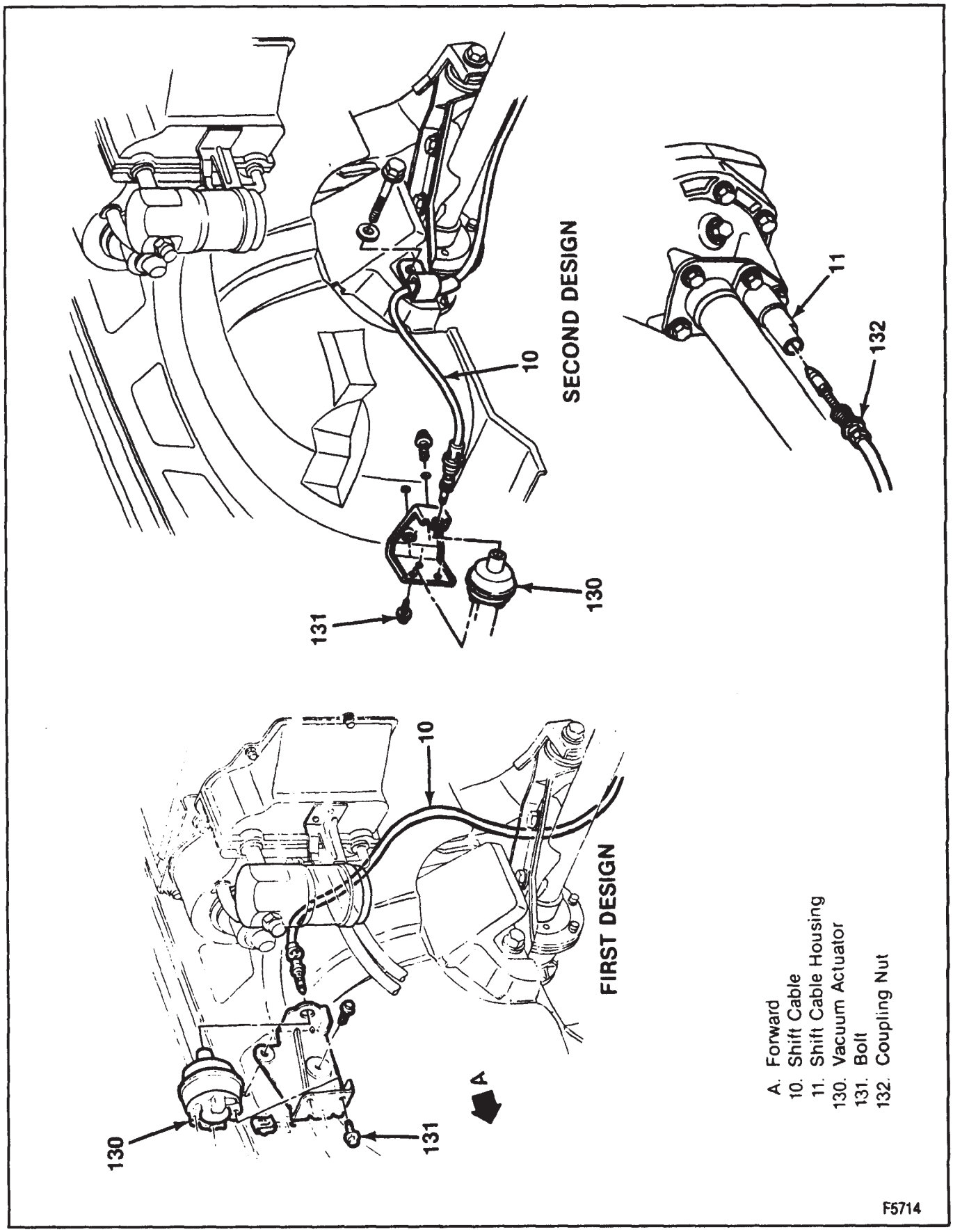

Figure 12—Shift Cable

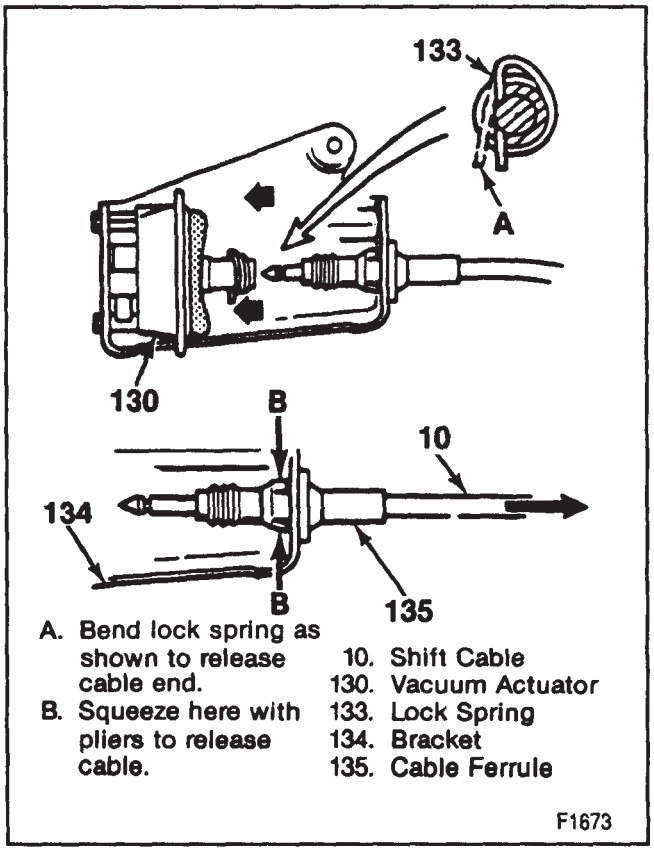

Figure 13—Disconnecting the Shift Cable from the Vacuum Actuator

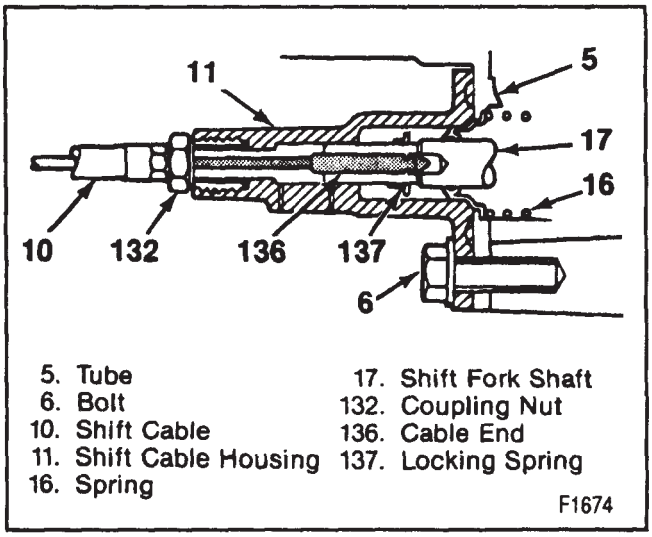

Figure 14—Shift Cable and Housing

VACUUM ACTUATOR REPLACEMENT

Remove or Disconnect (Figure 12)

1. Vacuum line from the vacuum actuator (130).
2. Shift cable (10) from the vacuum actuator. Refer to "Shift Cable Replacement" in this section.
3. Bolts (131).

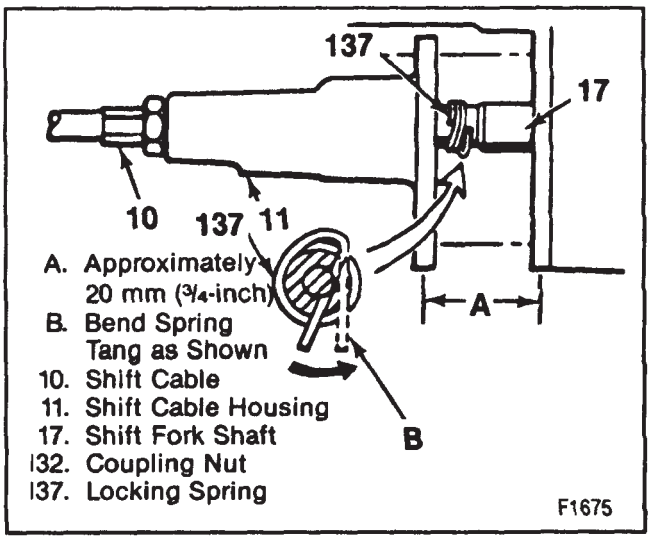

Figure 15—Disconnecting the Shift Cable from the Carrier

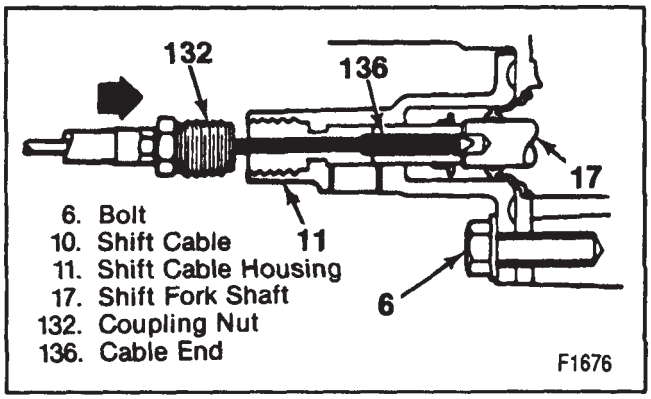

Figure 16—Connecting the Shift Cable to the Carrier

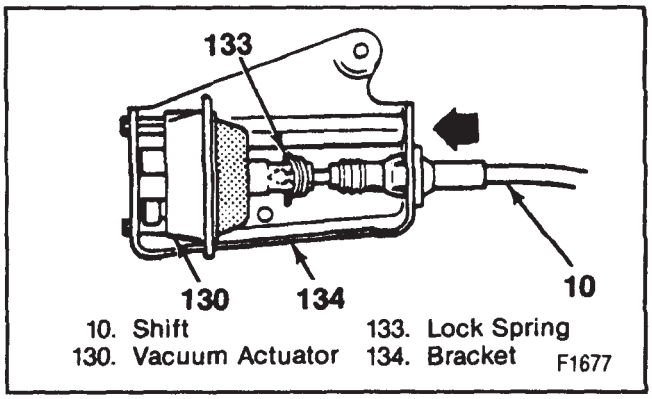

Figure 17—Connecting the Shift Cable to the Vacuum Actuator

4. Vacuum actuator.

Install or Connect (Figure 12)

1. Vacuum actuator (130).
2. Bolts (131).

Tighten

- Tighten to 1.4 N·m (13 in. lbs.).

3. Shift cable (10). Refer to "Shift Cable Replacement" in this section.
4. Vacuum line.

PINION FLANGE REPLACEMENT

Important

It is essential that the positions of all driveline components relative to the propeller shaft and axles be observed and *ACCURATELY REFERENCE MARKED PRIOR TO DISASSEMBLY.* These components include the propeller shafts, drive axles, pinion flanges, output shafts, etc. *ALL COMPONENTS MUST BE REASSEMBLED IN THE EXACT RELATIONSHIP TO EACH OTHER AS THEY WERE WHEN REMOVED.* Additionally, the published specifications and torque values, as well as any measurements made prior to disassembly must be followed.

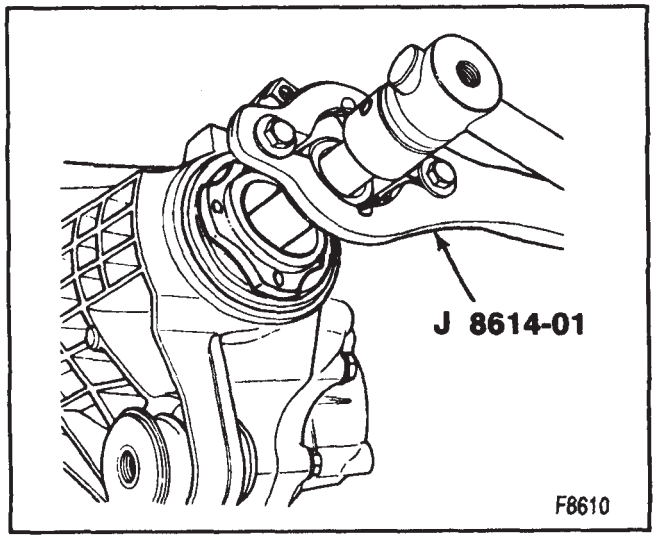

Figure 18—Removing/Installing the Pinion Nut

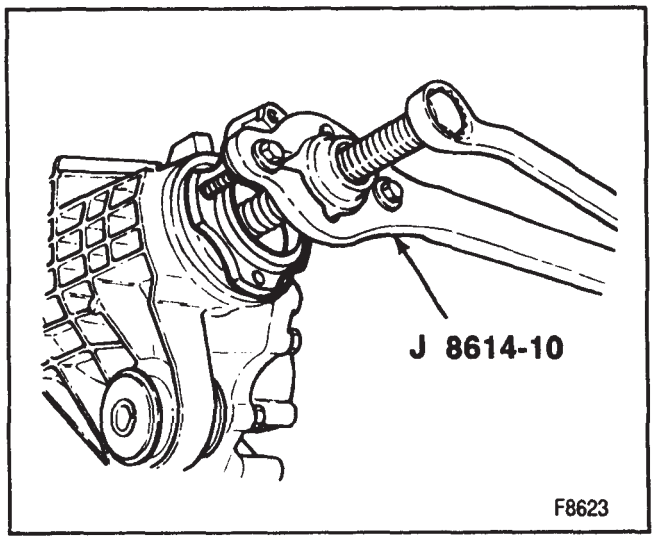

Figure 19—Removing the Pinion Flange

Remove or Disconnect (Figures 18 through 20)

Tool Required:
J 8614-01 Companion Flange Holder

- Unlock the steering column so the linkage is free to move.
- Raise the vehicle and support it with suitable safety stands.
- Disconnect negative battery cable from battery.

1. Bolts (101) from propeller shaft flange to front axle.
2. Propeller shaft (100).
   - Support the propeller shaft out of the way.
   - Check and record preload with an inch pound torque wrench (figure 21). This will give combined pinion bearing, seal, carrier bearing, axle bearing and seal preload.
3. Pinion flange nut (46) and washer (45).
   - Hold the pinion flange (44) with J 8614-01 (figure18).
4. Pinion flange using J 8614-01 (figure 19).
   - Have a suitable container to catch lubricant.

Install or Connect (Figures 18 through 21)

NOTICE: For steps 3 and 5 see "Notice" on page 4C-1.

Tool Required
J 8614-01 Companion Flange Holder

1. Special seal lubricant (Part No. 1051069 or equivalent) to the outside of the pinion flange.
2. New pinion flange (44).
3. Washer (45) and nut (46) using J 8614-01 (figure 18).

Tighten

- Nut (46) a little at a time, turning the pinion flange several times after each tightening to set the rollers. Check the bearing preload each time until preload is 0.3 to 0.6 N·m (3 to 5 in. lbs.) more than the reading recorded during removal (figure 21).

4. Propeller shaft (100).
5. Bolts (101) to flange.

Tighten

- Bolts to 75 N·m (55 ft. lbs.).

Inspect

- Axle for lubricant level and add lubricant as necessary.

PINION OIL SEAL REPLACEMENT

Remove or Disconnect (Figures 18 through 21)

Tool Required:
J 8614-01 Companion Flange Holder

Important

It is essential that the positions of all driveline components relative to the propeller shaft and axles be observed and *ACCURATELY REFERENCE MARKED PRIOR TO DISASSEMBLY.* These components include the propeller shafts, drive axles, pinion flanges, output shafts, etc. *ALL COMPONENTS MUST BE REASSEMBLED IN THE EXACT RELATIONSHIP TO EACH OTHER AS THEY WERE WHEN REMOVED.* Additionally, the published specifications and torque values, as well as any measurements made prior to disassembly must be followed.

1. Bolts (101) and retainers (102) from the pinion flange (44).
   - Accurately mark the propeller shaft and pinion flange.
2. Propeller shaft (100) from the pinion flange (44).
   - Support the propeller shaft out of the way.
   - Mark the pinion flange, pinion shaft, and the nut. Record the bearing preload value before disassembly so that the same preload torque can be maintained upon reassembly.
3. Pinion flange nut (46) and washer (45) (figure 9).
   - Use J 8614-01 to hold the pinion flange (figure 18).
4. Pinion flange (44) (figure 19).
   - Have a suitable container in place to catch lubricant.
5. Pinion oil seal (42) by driving it out of the carrier with a blunt punch or drift.
   - Do not damage the carrier.

Inspect

- Seal surface of the pinion flange for tool marks, nicks, or damage, such as a groove worn by the seal.
- Carrier bore for burrs that might cause leaks around the outside of the seal.

Install or Connect (Figures 18 through 21)

NOTICE: For steps 4 and 6 see "Notice" on page 4C-1.

Tools Required:
J 8614-01 Companion Flange Holder
J 33782 Pinion Oil Seal Installer

1. New pinion oil seal (42) using J 33782 (figure 20).
2. Special seal lubricant (Part No. 1050169 or equivalent) to the outside of the pinion flange (44) and the sealing lip of the new pinion oil seal (42).
3. Pinion flange (44) in the exact spline relationship as it came off.
4. Washer and nut using J 8614-01 (figure 18).

Tighten

- Nut to the same position as marked during removal, using the same amount of turns as it took to remove it.

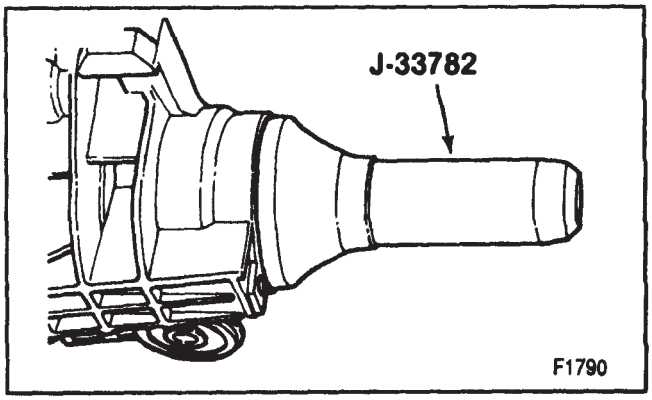

Figure 20—Installing the Pinion Oil Seal

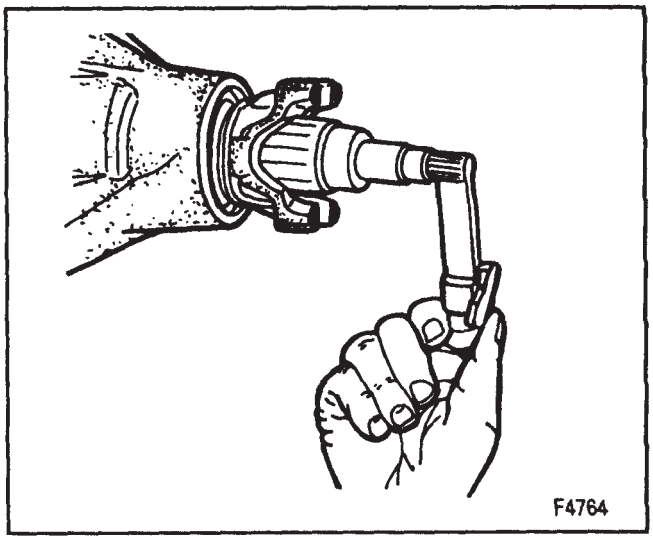

Figure 21—Checking Pinion Preload

Important

- Check the pinion preload torque value. Set the torque value the same as before removing the flange, tightening the nut slightly if necessary to arrive at the torque value figure.

5. Propeller shaft (100) to the pinion flange (44).
6. Propeller shaft flange to front axle flange bolts (101).
   - Align the marks made during removal. Components must be reassembled in the same position.

Tighten

- Bolts (101) to 75 N·m (55 ft. lbs.).

DIAGNOSIS OF DRIVE AXLES

PROBLEM	POSSIBLE CAUSE	CORRECTION
Clicking Noise In Turns	Worn or damaged outer CV joint.	Replace.
"Clunk" When Accelerating From "Coast"	1. Loose CV joint to output shaft bolts. 2. Damaged inner CV joint.	1. Tighten. 2. Replace.
Shudder Or Vibration During Acceleration	1. Excessive CV joint angle. 2. Worn or damaged CV joints. 3. Sticking spider assembly (inner CV joint). 4. Sticking joint assembly (outer CV joint).	1. Repair. 2. Replace. 3. Lubricate or replace. 4. Lubricate or replace.
Vibration At Highway Speeds	1. Out of balance or out of round tires. 2. Front end out of alignment.	1. Balance or replace. 2. Align.
		D0065

DRIVE AXLE (HALFSHAFT) REPLACEMENT

REMOVAL

Remove or Disconnect (Figures 22 through 32)

Tools Required:
- J 28733 Axle Remover
- J 24319-01 Tie Rod Puller
- J 8059 Snap Ring Pliers
- J 35910 Boot Clamp Tool

- Raise the vehicle and support it with suitable safety stands.

1. Tires and wheels.
   - Insert a drift through the brake caliper into one of the brake rotor vanes to prevent the halfshaft from turning.
2. Cotter pin (153), retainer (152), nut (151), and washer (150).

Important

It is essential that the positions of all driveline components relative to the propeller shaft and axles be observed and *ACCURATELY REFERENCE MARKED PRIOR TO DISASSEMBLY.* These components include the propeller shafts, drive axles, pinion flanges, output shafts, etc. *ALL COMPONENTS MUST BE REASSEMBLED IN THE EXACT RELATIONSHIP TO EACH OTHER AS THEY WERE WHEN REMOVED.* Additionally, the published specifications and torque values, as well as any measurements made prior to disassembly must be followed.

- Loosen, but do not remove, the six bolts (80 or 82) securing the inboard C/V joint flange to the output shaft companion flange.

3. Brake line support bracket from the upper control arm to allow extra knuckle travel.
4. Cotter pin and nut from the outer tie rod end. Refer to SECTION 3C.

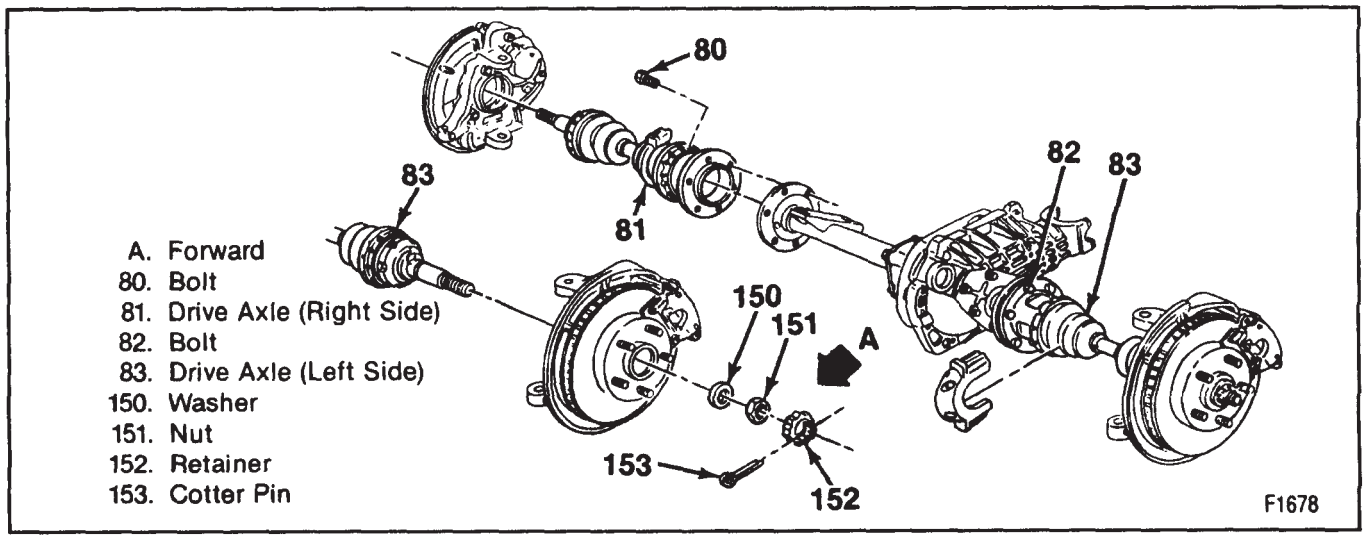

Figure 22—Drive Axles and Components

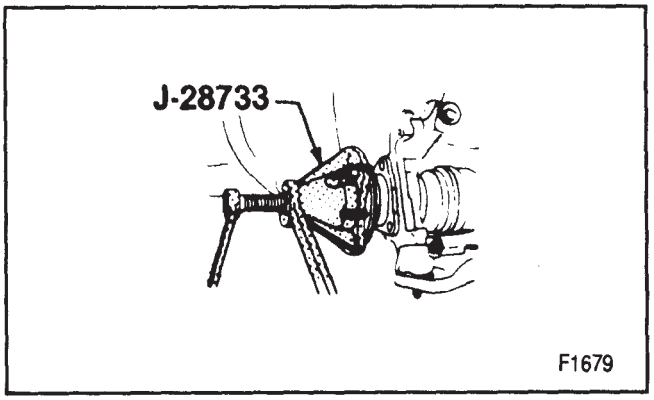

Figure 23—Disconnecting the Drive Axle from the Hub

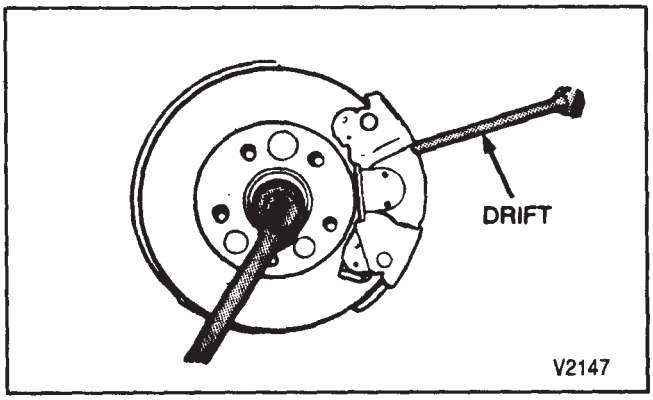

Figure 24—Preventing the Shaft From Turning

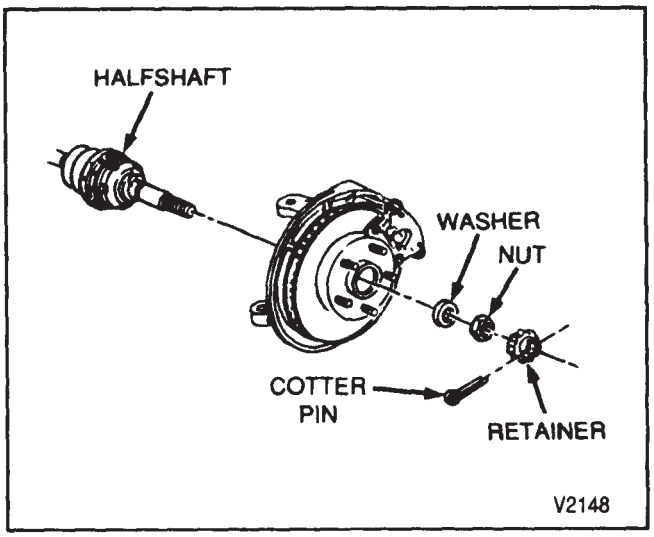

Figure 25—Cotter Pin, Hub Nut, and Washer Removal

- Separate the outer tie rod ball stud from the steering knuckle using J 24319-01. Refer to SECTION 3C.

NOTICE: Do not attempt to disengage the joint by driving a wedge type tool between the joint and knuckle as the seal may be damaged.

- Push the linkage to the opposite side of the vehicle and secure the outer tie rod up and out of the way. This will provide the needed clearance to remove the halfshaft.

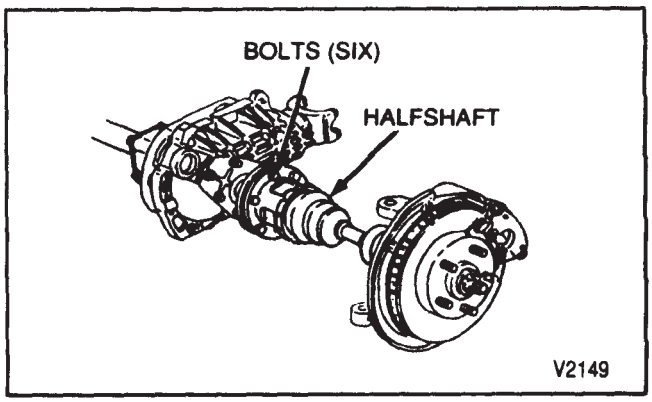

Figure 26—Inboard Flange Bolt Removal

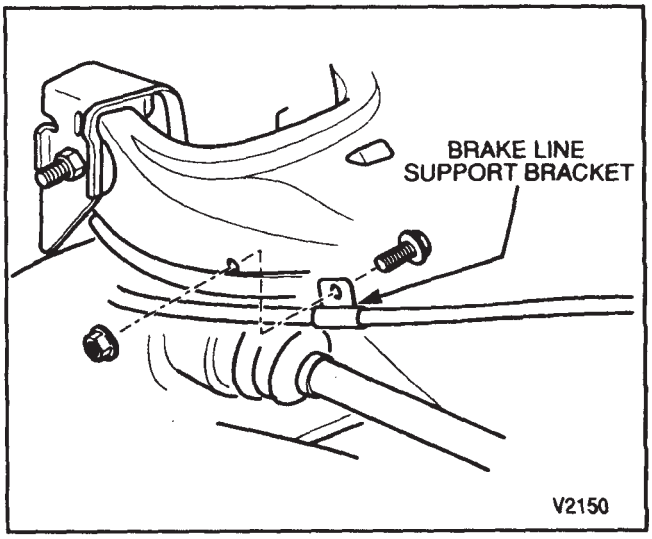

Figure 27—Brake Line Bracket Removal

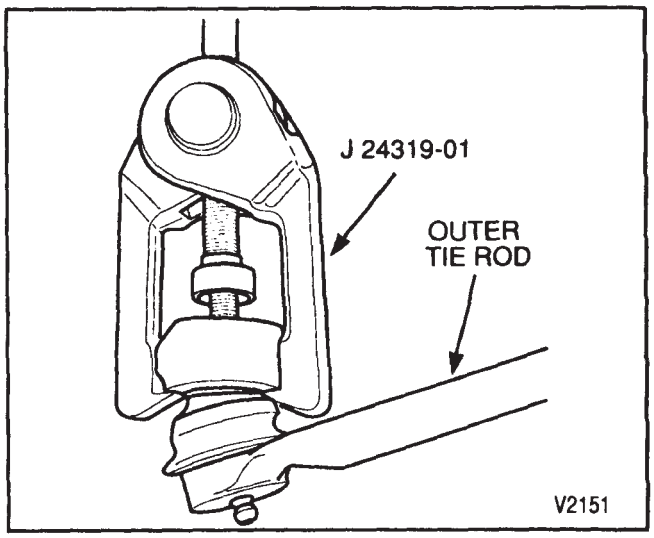

Figure 28—Disconnecting the Tie Rod

5. Lower shock mounting nut and bolt.
   - Collapse/compress the shock absorber and secure it up and out of the way.
   - Depending on the type of hoist, it may be required to position the floor stand between the spring seats and lower control arm ball joint for

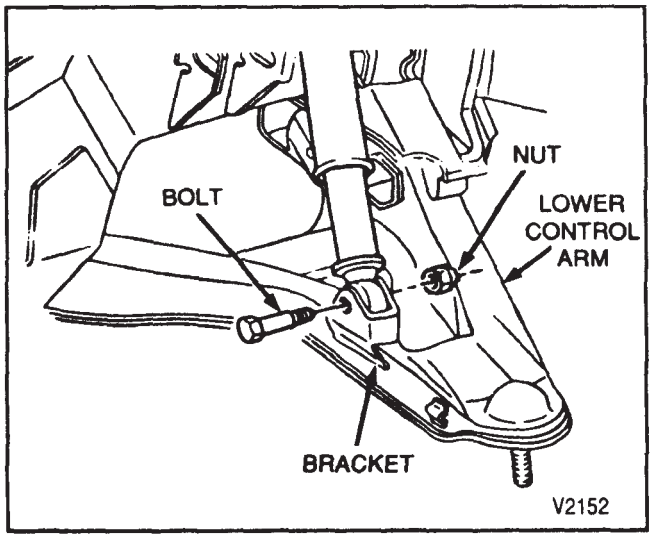

Figure 29—Disconnecting the Lower Shock Mount

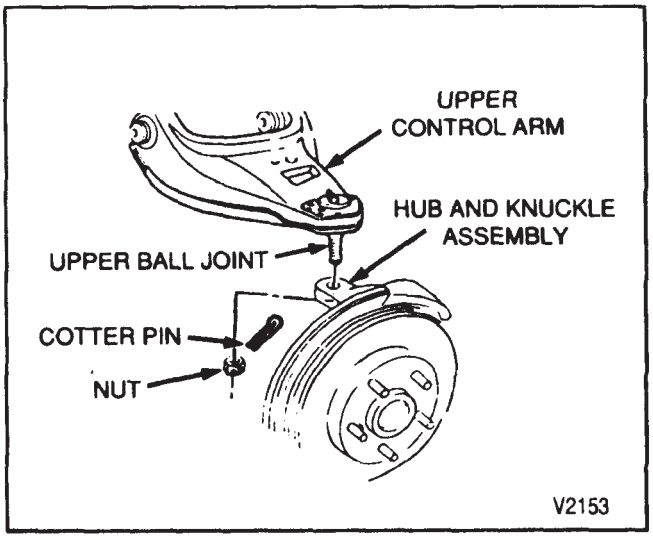

Figure 30—Separating the Ball Joint From the Knuckle

maximum leverage. The weight of the vehicle is used to relieve the spring tension on the upper control arm.

Important

The floor jack or stand must remain under the control arm spring seat while servicing the halfshaft to maintain spring and control arm position. Failure to do so could result in personal injury and/or component damage.

6. Cotter pin.
7. Ball joint stud nut (figure 30).
   - Loosen and move the stud away from the knuckle.
   - Tip the knuckle out and toward the rear of the vehicle.
   - Suspend the knuckle from the upper control arm to prevent straining the brake line.

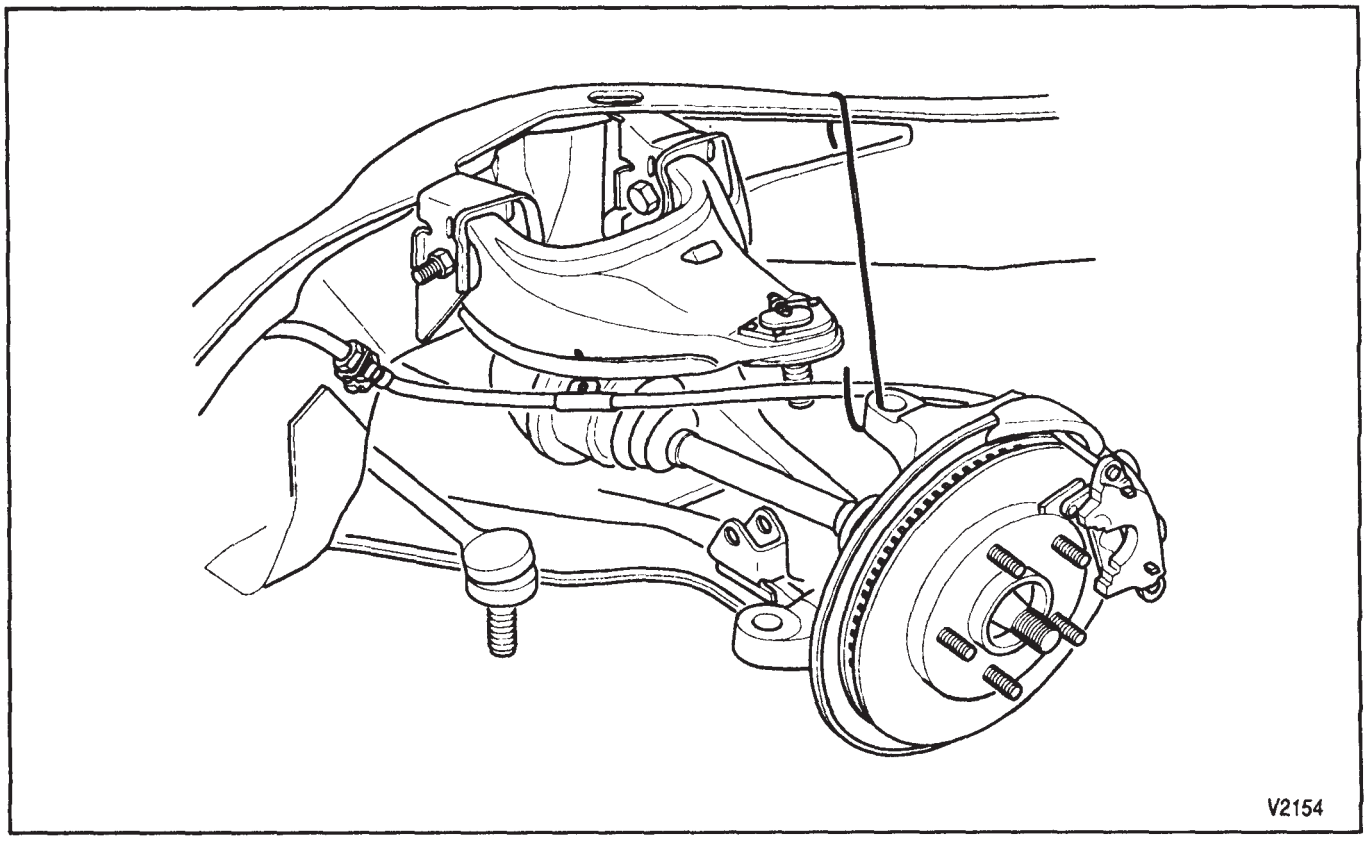

Figure 31—Suspending the Knuckle

Important

Cover the shock mounting bracket and the ball stud on the lower control arm with a shop towel to prevent possible halfshaft seal damage during removal and installation.

8. Splined shaft from the knuckle using J 28733 (or equivalent).
9. Inboard flange bolts loosened earlier .
10. Halfshaft from the vehicle.
    - Support the halfshaft while removing it so as not to tear the boot.

CAUTION: Do not allow the vehicle's weight to load the front wheels, or attempt to operate the vehicle, when the drive axle(s) or hub nut(s) are removed. To do so may cause the front wheel bearing inner races to separate, resulting in damage to front brake and suspension components and/or personal injury.

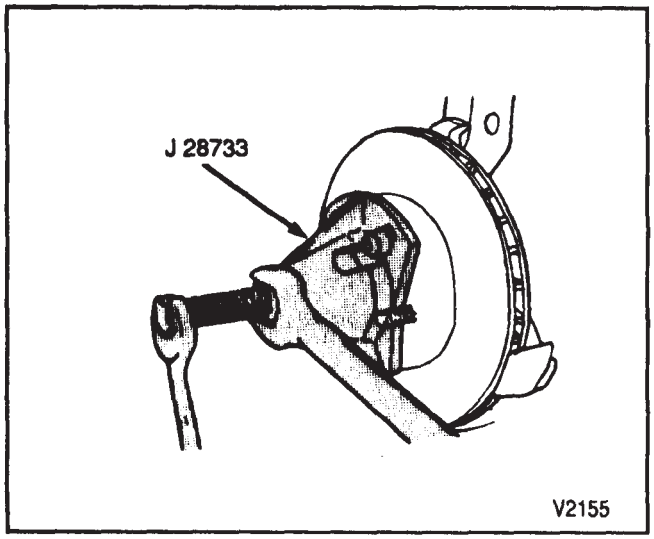

Figure 32—Separating the Splined Shaft From the Knuckle

OUTER CV JOINT/BOOT REPLACEMENT

Disassemble (Figures 33 through 40)

Tool Required:
J 8059 Snap Ring Pliers (or equivalent)
J 35910 Boot Clamp Tool

- Place the halfshaft in a vise using a protective covering on the vise jaws.

1. Seal clamp protectors (figure 34)
2. Clamps (174 and 183).
   - Cut the clamps from the seal using a pair of side cutters.
   - For swage ring removal, use a hand grinder to cut through the ring taking care not to damage the outer race.
   - Slide the boot down the shaft away from the CV joint outer race.
   - Wipe the grease away from the face of the CV joint revealing the snap ring.
3. Snap ring (184). Using J 8059 (or equivalent) (figure 35).
4. Joint assembly from the axle shaft (182).
   - Discard the boot.

Clean

- Thoroughly degrease the outer joint assembly and allow to dry before reassembly.

Inspect

- Outer joint assembly for unusual wear, cracks and other damage. Replace as necessary.

Clean

- The shaft. If rust is present in the seal mounting area (grooves), wire brush this area (figure 33).

5. Balls (185) (figure 37).
   - Using a brass drift and hammer, tap on the cage (171) until it tilts enough to remove the first ball. Remove the other balls in the same manner.

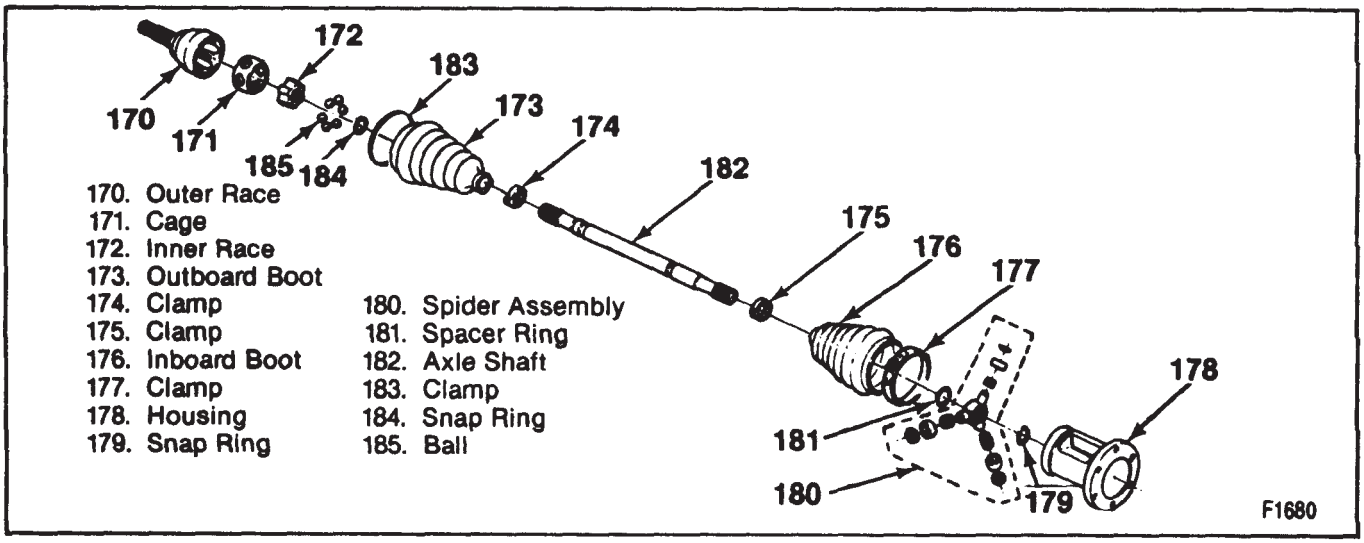

Figure 33—Drive Axle (Halfshaft) Components

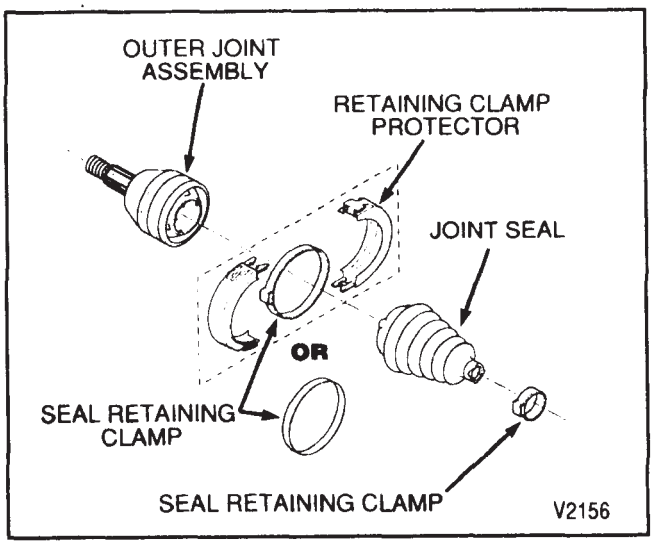

Figure 34—Outer CV Joint Disassembly

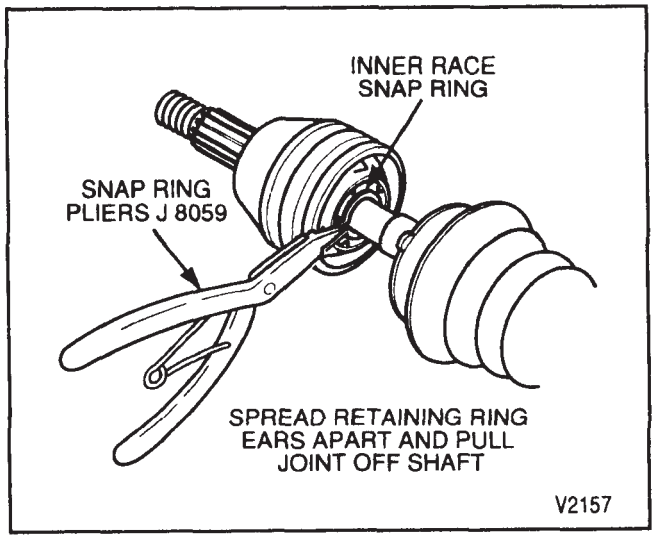

Figure 35—Separating the CV Joint From the Axle

6. Cage (171) from the outer race (170) (figure 37).
   - Pivot the cage with inner race (172) 90-degrees to the center line of the outer race.
   - Align the cage windows (B) with the lands (A) of the outer race (figure 38).
   - Lift out the cage with the inner race.
7. Inner race (172) (figure 39).
   - Rotate the inner race up and out of the cage, as shown.

Clean

- Parts in solvent.

Assemble (Figures 33 through 41)

Tools Required:
J 8059 Snap Ring Pliers (or equivalent)
J 34773 Clamp Installer

- Apply grease as specified in SECTION 0B to the ball grooves of the inner race (172), and outer race (170).

1. Inner race to the cage (171) (figure 39).

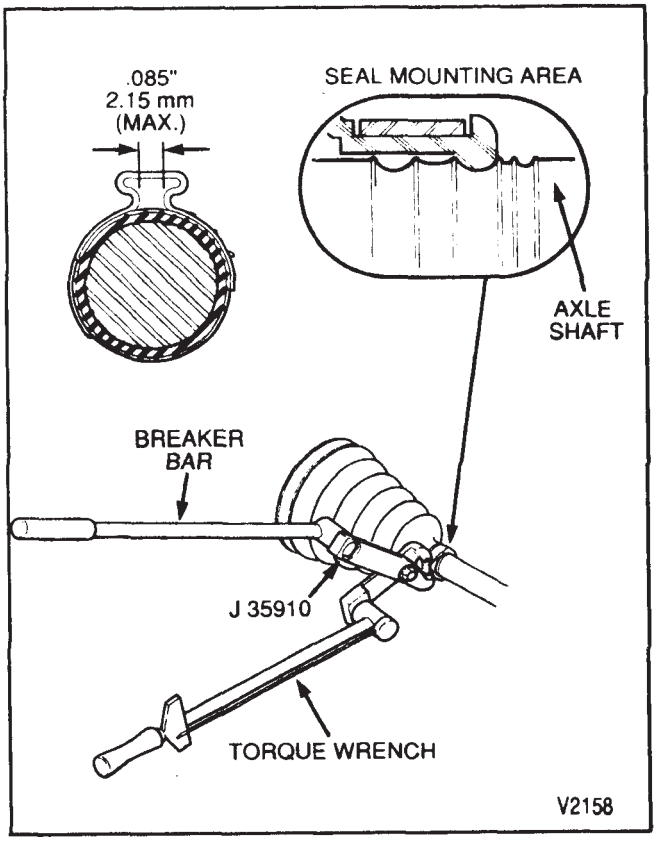

Figure 36—Small Retaining Clamp Installation

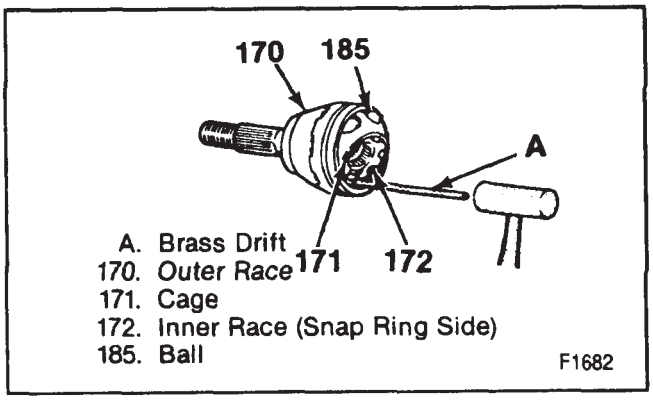

Figure 37—Removing/Replacing the Balls

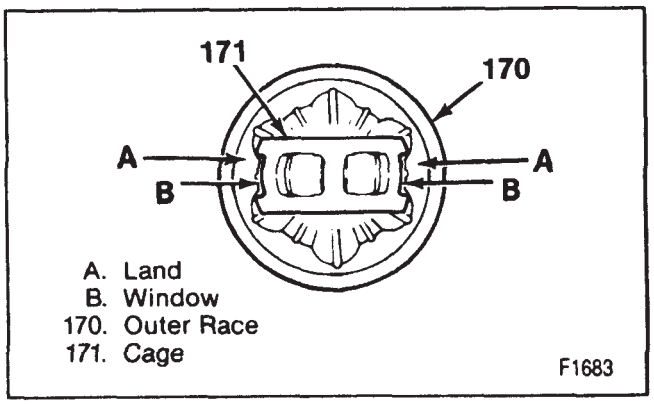

Figure 38—Removing/Replacing the Cage

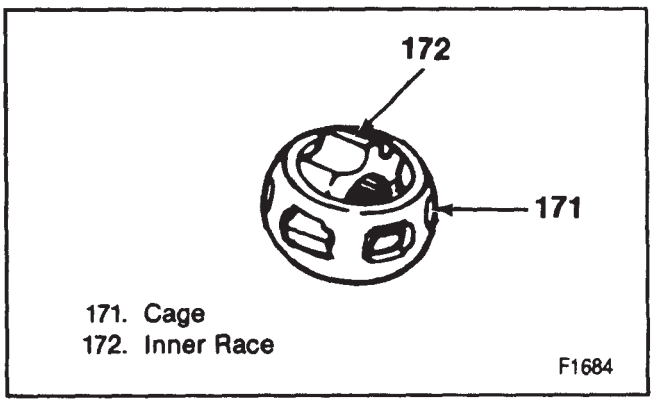

Figure 39—Removing/Replacing the Inner Race

- Rotate into place, as shown. Cage with inner race to the outer race (figure 38).
- Align the cage windows (B) with the lands (A). Pivot the cage into position (figure 38).
- Make sure the retaining ring side of the inner race faces out.

2. Balls (185) (figure 37).
   - Tap on the cage with a brass drift to tilt it enough to install the balls.
   - Pack the joint with grease as specified in SECTION 0B.
3. Small boot clamp.
4. Outboard boot (173) to the axle shaft (182).

Tighten

- Using tool J 35910 secure the small clamp to 136 N·m (100 ft. lbs.) (figure 36).

Measure

- Clamp ear gap dimension (figure 36).

5. Joint assembly to the axle shaft (figure 40).
6. Snap ring (184).
   - Pack the boot and outer joint assembly with pre-measured amount of grease supplied in the service kit.
   - Snap the boot onto the outer joint assembly then manipulate the joint and boot to remove excess air.
7. Large clamp (183) using J 34773 (figure 41).

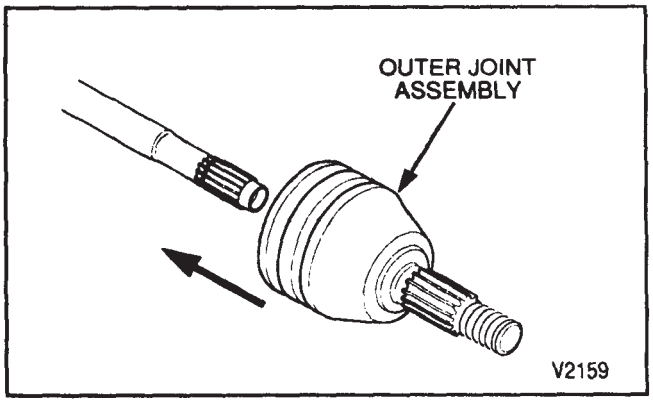

Figure 40—Installing the C/V Joint to the Axle

Tighten

- Large clamp to 176 N·m (130 ft. lbs.)

Measure

- Clamp ear gap dimension (figure 41).

INNER CV JOINT/BOOT (TRIPOT HOUSING) REPLACEMENT

Disassemble (Figures 42 and 44)

Tool Required:
J 8059 Snap Ring Pliers (or equivalent)
J 35910 Boot Clamp Tool

- Place the halfshaft in a vise using protective covers over the vise jaws.

1. Boot clamp protectors (figure 43).
2. Clamps (175 and 177).
   - Cut the clamps with side cutters to remove. For swage ring removal use a hand grinder to cut through the ring taking care not to damage the housing.
3. Axle shaft (182) with spider assembly (180) from the housing (178).

Clean

- Thoroughly clean the tripot housing and rollers. Allow to dry completely before reassembly.

Important

Handle the tripot spider assembly with care. The tripot needle rollers may separate from the spider trunnions.

Inspect

Rollers, needle bearings, trunnions, and housing for unusual wear, cracks, or other damage. Replace as required.

4. Spacer ring (181) using J 8059 (or equivalent) (figure 45).
   - Slide the spacer ring back on the axle shaft as shown. (figure 45), then slide the spider assembly (180) back to expose the snap ring (179).
5. Snap ring (179) using J 8059 (or equivalent).
6. Spider assembly (180).

Clean

- Old grease from the housing (178).
- Rust from the boot mounting grooves if any is present.

Assemble (Figures 45 through 48)

Tools Required:
J 8059 Snap Ring Pliers (or equivalent)
J 34773 Clamp Installer

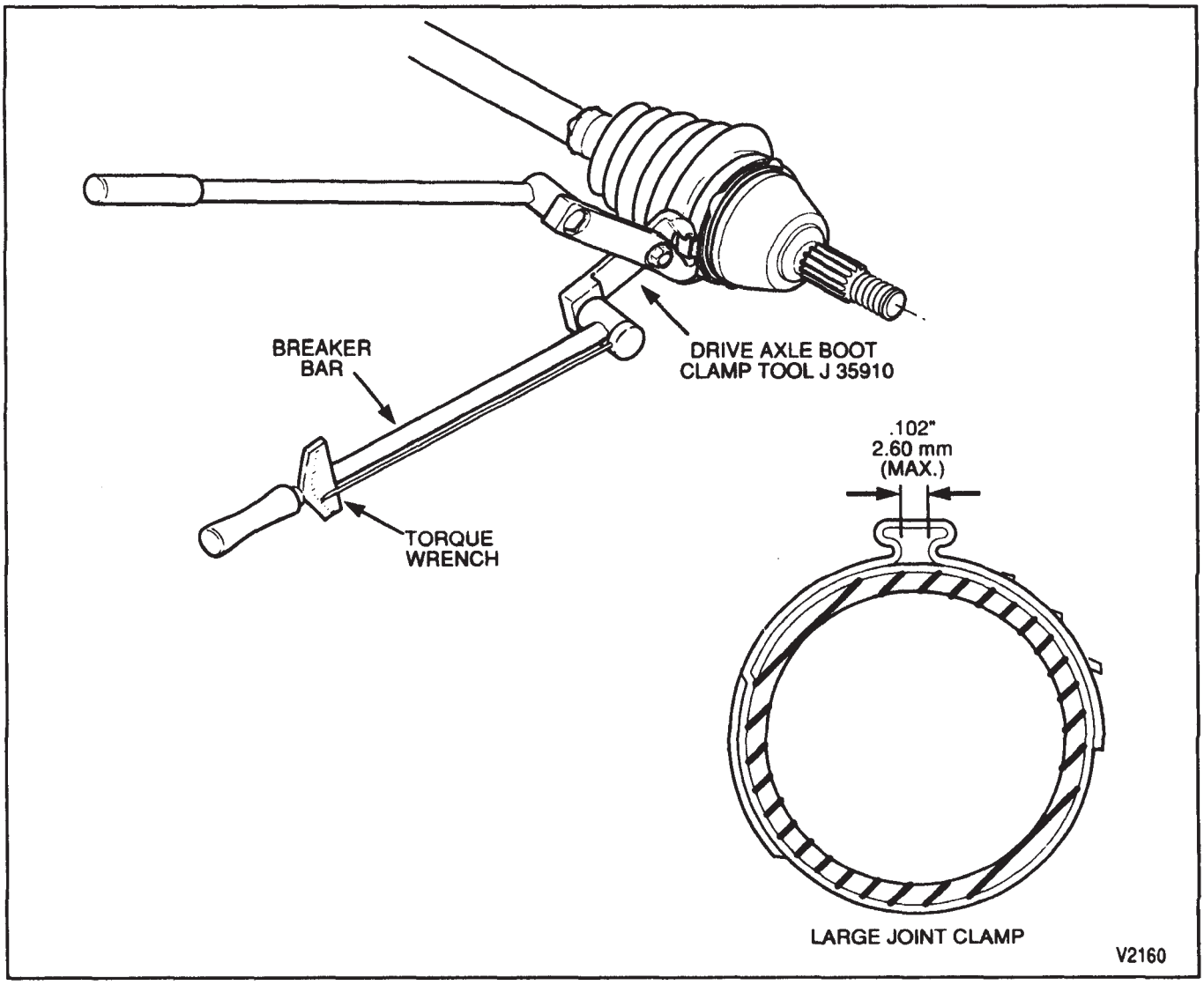

Figure 41—Installing the Large Retaining Clamp

1. Small boot clamp.
2. Inboard boot (176) to the axle shaft (182).
3. Spider assembly (180) to the axle shaft.
   - Make sure the snap ring counterbore faces the housing end of the axle, as shown in figure 45.
4. Snap ring (179) using J 8059 (or equivalent).
5. Spacer ring (181) using J 8059 (or equivalent) (figure 45).
   - Make sure the spacer ring is fully seated in the groove.

Tighten

- Small boot clamp to 136 N·m (100 ft. lbs.) (figure 46).

Measure

- Clamp ear gap dimension (figure 46).

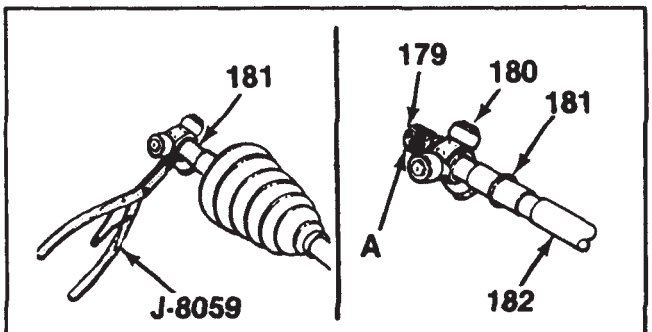

A. Counterbore in Spider Assembly Must Face This End of Axle
179. Snap Ring
180. Spider Assembly
181. Spacer Ring
182. Axle Shaft

F1686

Figure 42—Replacing the Spider

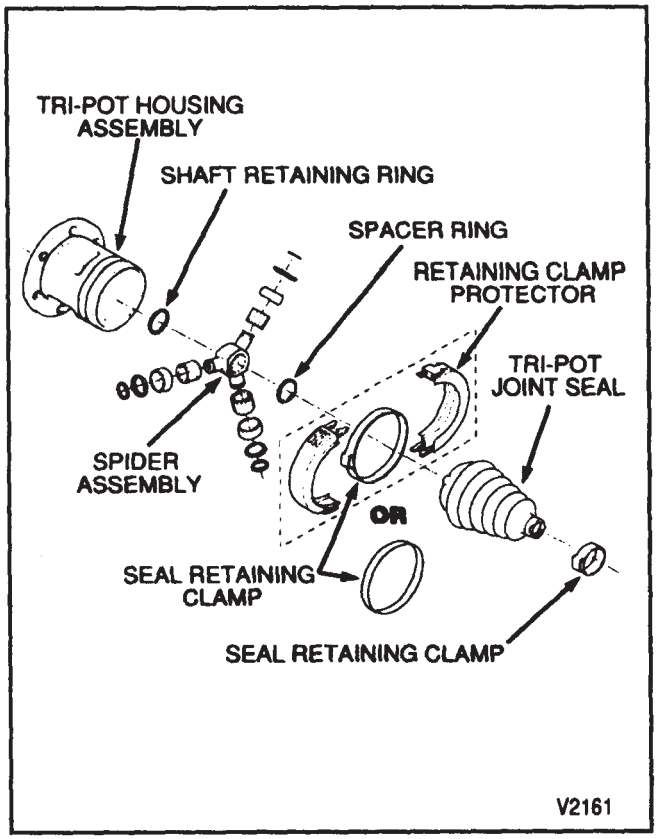

Figure 43—Disassembly of the Inboard Joint Assembly

- Repack the housing (178) with about half of the grease furnished in the boot kit. Put the remainder of the grease in the boot.
- Coat the inside of the boot sealing lips with grease.

6. Axle shaft with spider assembly to the housing (178).

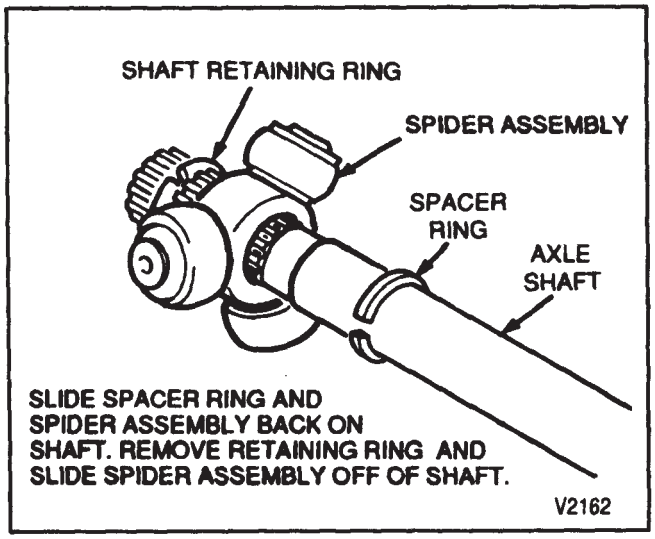

Figure 44—Snap Ring and Spider Removal

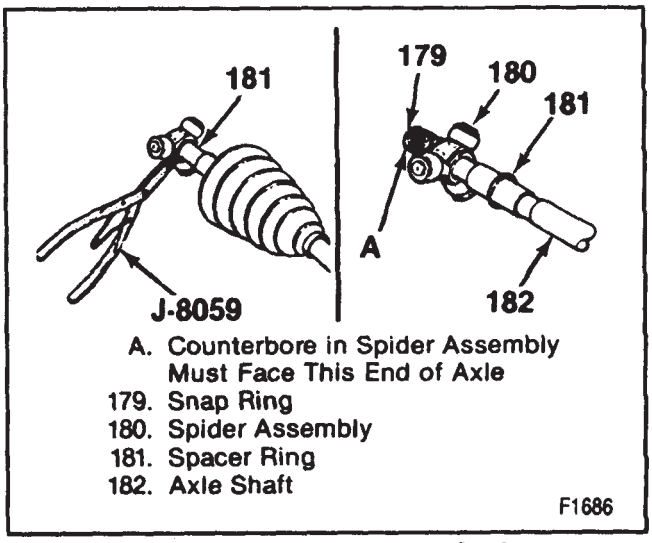

Figure 45—Replacing the Spider

Important

The joint must be assembled to the dimension shown or boot damage may occur.

7. Clamp (183). Use J 34773 (figure 49).

Tighten

- Clamp to 176 N·m (130 ft. lbs.).

Measure

- Clamp ear gap dimension (figures 48 and 49).

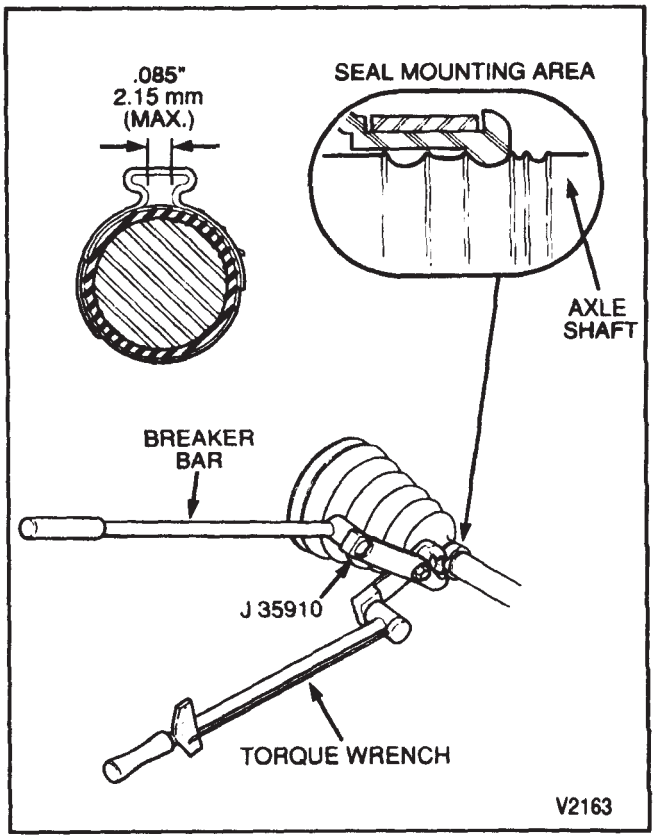

Figure 46—Installing the Small Retaining Clamp

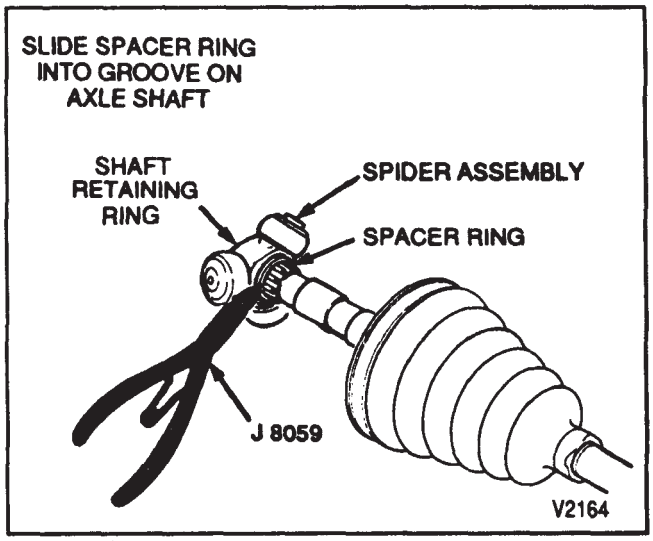

Figure 47—Spider Assembly Installation

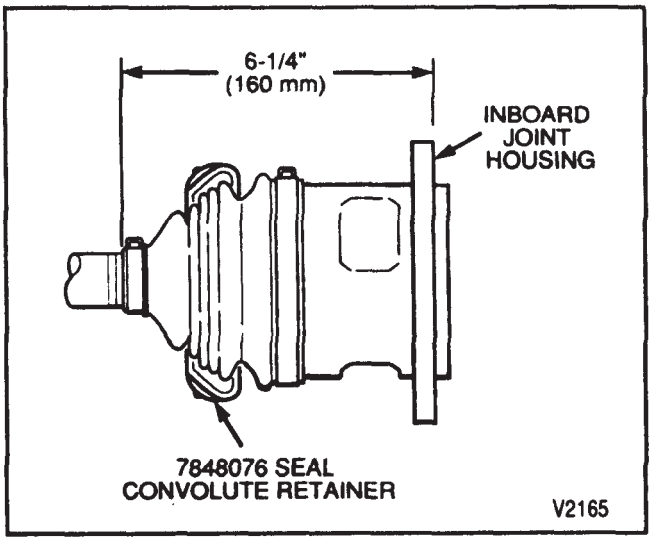

Figure 48—Proper Inboard Stroke Positioning

INSTALLATION

Install or Connect (Figures 22, and 24 through and 30)

- Prior to halfshaft installation, cover the shock mounting bracket, lower control arm ball stud, and all other sharp edges with a shop towel so as not to damage the boot .
- Install protective boot cover.

1. Drive axle (halfshaft) to the vehicle.
   - Push the splined axle end into the hub (figure 25).
2. Washer (150) and nut (151).
3. Bolts (80 or 82) but do not tighten.
4. Upper ball joint to steering knuckle (figure 30).
5. Upper ball joint nut.

Tighten

- Nut to 83 N·m (61 ft. lbs.)

6. Cotter pin
   - Lube the upper ball joint.
7. Shock absorber bolt and nut.

Tighten

- Nut and bolt to 73 N·m (54 ft. lbs.)

8. Tie rod to steering knuckle.

Tighten

- Tie rod nut to 47 N·m (35 ft. lbs.)

9. Cotter pin in the tie rod end.
10. Brake line support bracket to the upper control arm (figure 27).

Tighten

- Support bracket to 17 N·m (13 ft. lbs.).
- Nut (151) to 220-270 N·m (160-200 ft. lbs.).

11. Retainer (152) and cotter pin (153).

Important

- Align the cotter pin hole by rotating the retainer. DO NOT back off the nut (151), or tighten nut more than specified, to install the cotter pin. Bend the cotter pin so the retainer is held snugly, to prevent rattling.

Tighten

- Bolts (80 or 82) to 80 N·m (60 ft. lbs.).

12. *Brake calipers and hoses. Refer to SECTION 5.*
13. Wheels and tires.
    - Lower the vehicle.

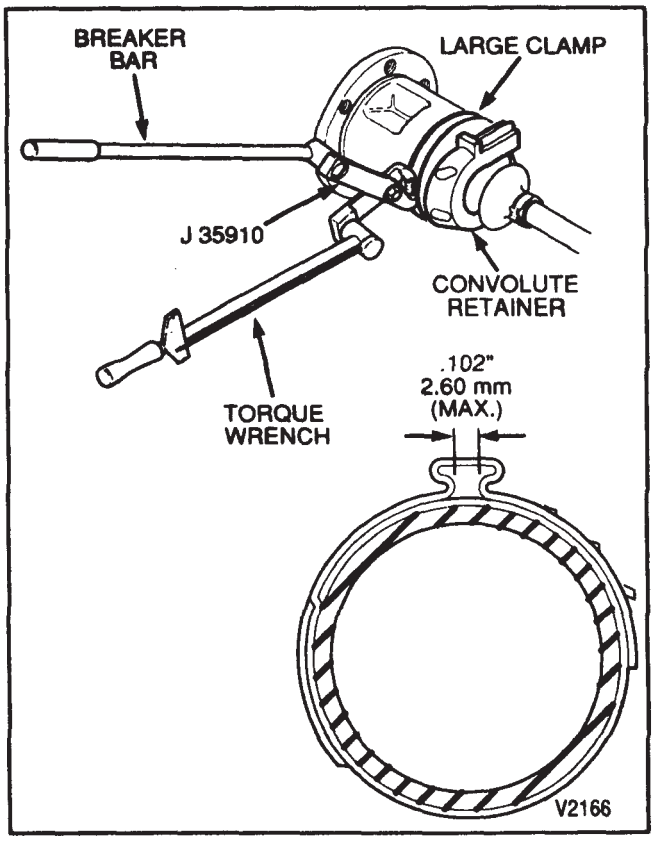

Figure 49—Large Retaining Clamp Installation

SPECIFICATIONS

FASTENER TIGHTENING SPECIFICATIONS

ITEM	N·m	Ft. Lbs.	In. Lbs.
Carrier Output Shaft to Drive Axle Bolts	80	60	—
Right Side Axle Tube to Frame Nuts	75	55	—
Right Side Axle Tube to Carrier Bolts	48	36	—
Shift Cable Housing to Carrier Bolts	48	36	—
Front Prop Shaft Clamp Bolts	20	15	—
Carrier Assembly Mounting			
Bolts	90	65	—
Nuts	75	55	—
Shift Cable Coupling Nut	10	—	90
Vacuum Actuator Bolts	1.4	—	13
Drive Axle Nut at Front Hub	220-270	160-200	—

T2737

SPECIAL TOOLS

1. J-8059

2. J-28733

3. 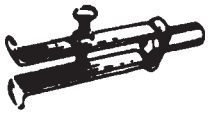 J-29369-2

4. J-34011

5. J-33791

6. J-33798

7. J-33799

8. J-33842

9. J-33844

10. J-33893

11. 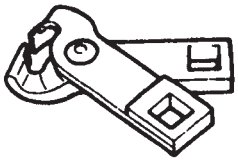 J-34773

1. Snap Ring Pliers
2. Axle Remover
3. Bearing Remover
4. Pilot Bearing Remover
5. Bushing Remover and Installer Set
6. Hub Engagement Tool
7. Shift Cable Housing Seal Installer
8. Pilot Bering Installer
9. Bearing Installer
10. Shaft Seal Installer
11. Clamp Installer

B7613

SECTION 5

BRAKES

CONTENTS

SUBJECT	PAGE
Introduction	5-1
Hydraulic Brakes	5A-1
Hydraulic Brake Booster Systems	5A1-1
Hydraulic Foundation Brakes	5A2-1
Parking Brake	5C-1
Four Wheel Antilock Brake System	5E1-1
Rear Wheel Antilock Brake System	5E3-1

INTRODUCTION

The braking system consists of a control system, a power booster system, foundation brakes, and parking brake systems.

CONTROL SYSTEMS

Section 5A covers lines, hoses, fluids, reservoirs, master cylinders, combination valves, and mechanical linkages. All hydraulic base brake components are covered in one diagnosis chart to assist in troubleshooting.

Sections 5E covers wiring diagrams, diagnosis circuit checks, troubleshooting charts by the codes, bleeding and service procedures for the four wheel or rear wheel antilock systems.

HYDRAULIC BRAKE BOOSTER SYSTEMS

Section 5A1 covers vacuum or hydraulic power assist mechanisms within the brake system.

HYDRAULIC FOUNDATION BRAKES

Section 5A2 covers the disc or drum brake assemblies at the wheels.

PARKING BRAKE SYSTEMS

Section 5C covers pedals, cables, replacement and adjustment, and drum refinishing for the parking brake systems.

SECTION 5A

HYDRAULIC BRAKES

NOTICE: When fasteners are removed, always reinstall them at the same location from which they were removed. If a fastener needs to be replaced, use the correct part number fastener for that application. If the correct part number fastener is not available, a fastener of equal size and strength (or stronger) may be used. Fasteners that are not reused, and those requiring thread locking compound will be called out. The correct torque value must be used when installing fasteners that require it. If the above conditions are not followed, parts or system damage could result.

CONTENTS

SUBJECT	PAGE
General Description	5A- 1
Fluid Handling	5A- 1
Substandard, Contaminated Fluids	5A- 2
Pipes and Hoses	5A- 2
Master Cylinder	5A- 2
Combination Valve	5A- 3
Flushing the Brake System	5A- 3
Diagnosis of the Brake System	5A- 3
System Service Checks	5A- 5
Pedal Travel and Effort	5A- 5
Master Cylinder Inspection	5A- 5
Combination Valve Circuit Test	5A- 6
Combination Valve Warning Switch Test	5A- 6
Fluid Leaks	5A- 6
Road Testing the Brakes	5A- 6
On-Vehicle Service	5A- 7
Component Adjustment	5A- 7
Filling the Master Cylinder	5A- 7
Bleeding the Brake Hydraulic System	5A- 7
Hose Replacement	5A- 9
Pipe Replacement	5A-10
Combination Valve Replacement	5A-11
Stoplamp Switch	5A-12
Service Brake Pedal Replacement	5A-13
Master Cylinder Replacement	5A-13
Master Cylinder Bench Bleeding	5A-13
Specifications	5A-14
Special Tools	5A-15

GENERAL DESCRIPTION

FLUID HANDLING

CAUTION: Brake fluid may be irritating to the skin or eyes. In case of contact, take the following actions:

- Eye contact - rinse eyes thoroughly with water.
- Skin contact - wash skin with soap and water.

NOTICE: Brake fluid will damage painted surfaces. Brake fluid can also damage electrical connections. Use shop cloths, suitable containers, and fender covers to prevent brake fluid from contacting such surfaces. Always re-seal and wipe off brake fluid containers to prevent spills.

Use Delco Supreme 11 Brake Fluid (GM P/N 1052535) or an equivalent DOT-3 motor vehicle brake fluid.

NOTICE: DOT-5 silicone brake fluid should never be used in the Antilock Brake System. Excessive wear of brake components and other conditions can occur from using the wrong fluid.

Brake fluid should always be stored in a closed container. Re-seal brake fluid containers immediately after use. Brake fluid left in an open or improperly sealed container will absorb moisture. This can lower the fluid's boiling point and result in system contamination, corrosion or deterioration of rubber components.

SUBSTANDARD, CONTAMINATED FLUIDS

Mineral oil or water in the brake fluid or using the wrong brake fluid may cause the brake fluid to boil or the rubber components in the brake hydraulic system to deteriorate.

Swollen master cylinder piston seals show that the rubber parts have deteriorated. This deterioration may also be shown by swollen wheel cylinder boots, caliper boots or the master cylinder reservoir diaphragm.

If rubber deterioration is present, replace all rubber parts in the system including hoses. Also check for fluid on the brake linings. If any is found, replace the linings.

If the fluid is contaminated and the master cylinder piston seals are satisfactory, check for leakage or excessive heat conditions. If no leakage or excessive heat conditions are found, drain the fluid, flush with new brake fluid, refill, and bleed the system.

PIPES AND HOSES

The hydraulic brake system components are connected by special steel piping and flexible hoses. Flexible hoses are used between the frame and the front calipers, and the frame and rear differential. When the hydraulic pipes have been disconnected for any reason, the brake system must be bled after reconnecting the pipe. Refer to "Bleeding the Brake Hydraulic System."

FLEXIBLE HOSE

On the front brakes, the hose connects and seals at the caliper with a bolt and brass gaskets. The fitting at the other end of the hose is secured at the frame with a retainer.

At the rear differential, one end of the hose mounts to the differential with a bolt. The other end is secured to the frame with a retainer.

MASTER CYLINDER

The master cylinder is designed for use with a system using low drag calipers. In addition to the standard master cylinder functions, a quick take-up feature is included. This provides a large volume of low pressure fluid to the wheels with the initial brake application. This large volume of fluid overcomes the clearance created by the caliper pistons and rear brake shoes retracting.

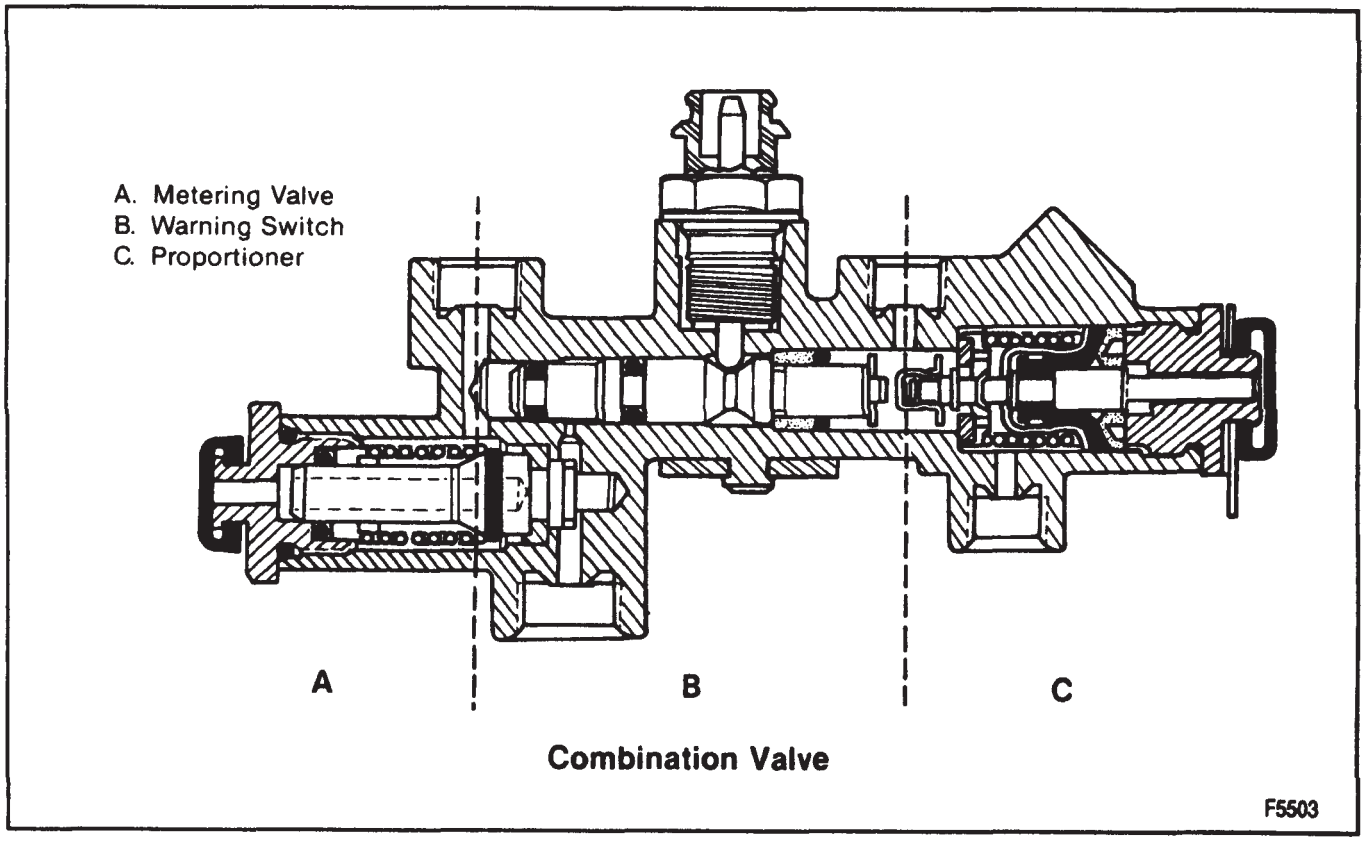

Figure 1—Combination Valve

COMBINATION VALVE

The combination valve has three sections in it (figure 1). Each section serves a different function.

The metering or hold off section (A) of the combination valve limits pressure to the front disc brakes until a predetermined input pressure is reached. This should be enough pressure to overcome the rear shoe retractor springs. There is no restriction to inlet pressures below 200 kPa (30 psi). This allows for pressure equalization during the no apply periods.

The pressure differential warning switch (B) constantly compares front and rear brake pressures from the master cylinder. If the front or rear brake systems malfunction, it energizes the warning lamp on the dash. The valve is designed so the switch will latch in the "warning" position once a malfunction has occurred. The only way to turn off the lamp is to repair the malfunction and apply enough pedal force to develop about 3100 kPa (450 psi) line pressure.

The proportioning section (C) of the combination valve delivers pressure to the rear brakes after a predetermined rear input pressure has been reached. This is done to prevent rear wheel lock-up on vehicles with light rear wheel loads.

The combination valve includes a "by-pass" feature. This ensures full system pressure to the rear brakes in the event of a front brake system malfunction. Full front pressure is retained in the event of a rear brake system malfunction.

FLUSHING THE BRAKE SYSTEM

The hydraulic system should be thoroughly flushed with clean brake fluid any time new parts are installed in the hydraulic system.

Flushing is also recommended if there is any doubt as to contamination, the grade of fluid in the system, or if the fluid contains the slightest trace of mineral oil.

Flushing is done at each bleeder valve in the same manner as bleeding. The bleeder valve is opened 1 1/2 turns and clean fluid is forced through the lines and bleeder valves until it emerges clear in color. Refer to "Bleeding the Brake Hydraulic System."

Check the master cylinder fluid level after flushing each valve and refill as required. When flushing is completed, make sure the master cylinder reservoir is filled to the proper level.

DIAGNOSIS OF THE BRAKE SYSTEM

PROBLEM	POSSIBLE CAUSE	CORRECTION
Uneven Brake Action (Brakes Pull)	1. Incorrect tire pressure.	1. Inflate evenly on both sides to specifications.
	2. Front end out of alignment.	2. Check and align to specifications.
	3. Loose suspension parts.	3. Check all the suspension mountings.
	4. Worn out brake linings.	4. Replace with lining of the correct material.
	5. Incorrect lining material.	5. Replace with linings of the correct material.
	6. Malfunctioning caliper assembly.	6. Check for frozen or sluggish pistons and the lubrication of the retainer bolts. Caliper should slide.
	7. Loose calipers.	7. Check and torque.
	8. Contaminated brake linings.	8. Repair as necessary. Replace the linings in complete axle sets.
	9. Malfunctioning rear brakes.	9. Check for inoperative self adjusters. Weak return springs. Leaking wheel cylinders.
	10. Leaking wheel or piston cylinder seal.	10. Repair as necessary.
	11. Restricted brake tubes or hoses.	11. Check for collapsed rubber hoses or damaged lines. Repair as necessary.
	12. Unmatched tires on the same axle.	12. Same style tires with about the same tread should be used on the same axle.
Slow Pedal Return	Compensating (peripheral) holes in the quick take-up valve are clogged.	Replace the master cylinder.

DIAGNOSIS OF THE BRAKE SYSTEM (cont'd)

PROBLEM	POSSIBLE CAUSE	CORRECTION
Brakes Squeak	1. Worn out linings. 2. Glazed brake linings. 3. Heat spotted rotors or drums. 4. Weak or incorrect brake shoe retention springs. 5. Contaminated brake linings. 6. Incorrect lining material. 7. Brake assembly attachments missing or loose. 8. Excessive brake lining dust.	1. Replace the linings. 2. Replace the linings. 3. Check per instructions. If within specifications, machine the rotor or drum. 4. Replace with new retention springs. 5. Repair as necessary. Replace the linings in complete axle sets. 6. Replace with linings of correct material. 7. Repair as necessary. 8. Clean the dust from the brake assembly.
Brake Pedal Pulsates	1. Excessive rotor lateral runout. 2. Rear drums out of round. 3. Heat spotted rotors or drums. 4. Incorrect wheel bearing adjustments. 5. Out of balance wheel assembly. 6. Brake assembly attachments missing or loose.	1. Check per instructions. If within specifications, machine the rotor. 2. Check per instructions. If within specifications, machine the drum. 3. Check per instructions. If within specifications, machine the drum. 4. Repair as necessary. 5. Repair as necessary. 6. Repair as necessary.
Rear Brake Clunk	Drum surface finish.	Condition generally improves with mileage. In severe cases machine or replace brake drums.
Excessive Pedal Effort	1. Leaking vacuum system. 2. Malfunctioning power brake unit. 3. Worn out linings. 4. Malfunctioning proportioning valve. 5. Incorrect lining material. 6. Incorrect wheel cylinder. 7. Center orifice in quick take-up valve clogged.	1. Repair as necessary. 2. Repair as necessary. 3. Replace the linings. 4. Replace the combination valve. 5. Replace with linings of the correct materials. 6. Replace with the correct size wheel cylinder. 7. Replace the master cylinder.
Brake Drag	1. Malfunctioning caliper assembly. 2. Contaminated or improper brake fluid. 3. Improperly adjusted parking brake. 4. Restricted brake tube or hoses. 5. Malfunctioning proportioning valve. 6. Malfunctioning self adjusters. 7. Malfunctioning master cylinder. 8. Improperly adjusted master cylinder pushrod.	1. Check for frozen or sluggish pistons and the lubrication of the retainer bolts. Caliper should slide. 2. Repair as necessary. 3. Adjust as necessary. 4. Check for collapsed rubber hoses or damaged lines. Repair as necessary. 5. Replace the combination valve. 6. Repair as necessary. 7. Repair as necessary. 8. Adjust pushrod length.

DIAGNOSIS OF THE BRAKE SYSTEM (cont'd)

PROBLEM	POSSIBLE CAUSE	CORRECTION
Brake Warning Light Comes On	1. Air in the brake system.	1. Check the fluid level. Check for leaks in the lines, wheel cylinders, or master cylinder. Bleed the system.
	2. Malfunctioning master cylinder.	2. Check for malfunctioning or leaking metering valve. Repair as necessary.
	3. Contaminated or improper brake fluid.	3. Repair as necessary.
	4. Parking brake on or not fully released.	4. Check the parking brake. Repair as necessary.
	5. Worn out brake lining.	5. Replace the linings.
	6. Incorrect wheel bearing adjustment.	6. Repair as necessary.
	7. Malfunctioning self adjusters.	7. Repair as necessary.
	8. Brake assembly attachments missing or loose.	8. Replace or repair as necessary.
	9. Improperly adjusted master cylinder pushrod.	9. Adjust the pushrod length.
	10. Antilock brake system malfunction.	10. Refer to REAR WHEEL ANTILOCK BRAKE SYSTEM (SECTION 5E3) or FOUR WHEEL ANTILOCK BRAKE SYSTEM (SECTION 5E1).
Excessive Pedal Travel	1. Fluid level low in the master cylinder reservoir.	1. Fill the reservoir with approved brake fluid. Check for leaks and air in the system. Check the warning lamp.
	2. Air in the brake system.	2. Check for leaks in the lines, wheel cylinders, or master cylinder. Bleed the system.
	3. Malfunctioning self adjusters.	3. Repair as necessary.
	4. Master cylinder.	4. Replace or repair as necessary.
	5. Incorrect wheel bearing adjustment.	5. Repair as necessary.
	6. Improperly adjusted master cylinder pushrod.	6. Adjust the master cylinder pushrod.
	7. Fluid bypassing quick take-up valve to the reservoir.	7. Replace the master cylinder.
	8. Leaking brake line or connection.	8. Repair as necessary.
	9. Leaking wheel cylinder or caliper.	9. Repair as necessary.
		D0205

SYSTEM SERVICE CHECKS

PEDAL TRAVEL AND EFFORT

Tool Required:

J 28662 Brake Pedal Effort Gage

At frequent intervals, the brake pedal travel should be checked (figure 2). Travel is the distance the pedal moves toward the floor from a full released position. This check should be made with the brakes cold and about 445 N (100 lbs.) of force on the pedal using J 28662.

Pump the brake pedal at least three times with the engine off before making the check. Measure the distance from the bottom of the steering wheel to the brake pedal. Take the first measurement (A) with the brakes released and the second measurement (B) with the brakes applied. Subtract measurement (A) from measurement (B). This is the brake pedal travel. The travel specification for vacuum power brakes is 61 mm (2.5 inches).

MASTER CYLINDER INSPECTION

These tests will not find all master cylinder malfunctions. Refer to "Diagnosis of the Brake System" if the problem is not found with these tests.

1. Check for a cracked master cylinder casting or brake fluid around the master cylinder. Leaks are indicated only if there is at least a drop of fluid. A damp condition is not abnormal.
2. Check for binding pedal linkage and incorrect pushrod length. If both of these are satisfactory, disassemble the master cylinder. Refer to the "Light Duty Truck Unit Repair Manual."
3. Check the master cylinder for swollen or elongated primary piston seal(s).

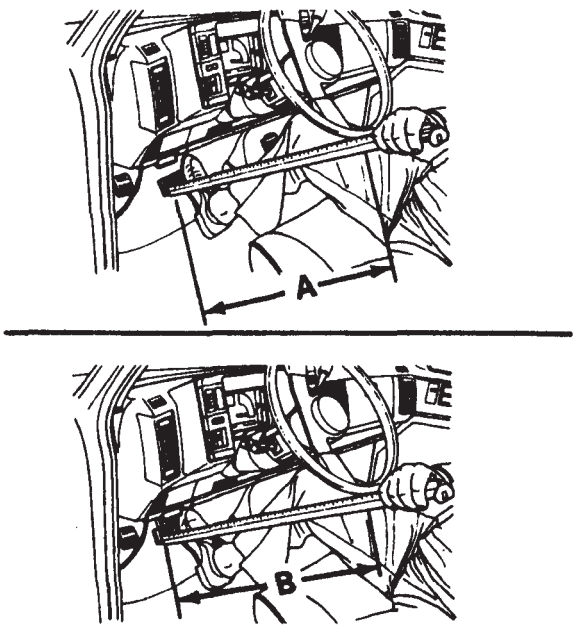

A. Brakes Not Applied
B. Brakes Applied
C. Brake Pedal Travel = Measurement B-Measurement A

F5707

Figure 2—Checking Pedal Travel

- If swollen seals are found, refer to "Substandard, Contaminated Fluids" and "Flushing the Brake System."

COMBINATION VALVE CIRCUIT TEST

1. Disconnect the switch wire from the valve.
2. Connect a jumper wire from the switch wire to ground.
3. Turn the ignition switch to the "ON" position.
   - The warning lamp should light.
   - If the lamp does not light, check the bulb.
   - If the bulb is good, refer to SECTION 8A for further diagnosis.
4. Turn the ignition switch "OFF."
5. Disconnect the jumper wire and connect the wire to the switch terminal on the valve.

COMBINATION VALVE WARNING SWITCH TEST

1. Raise the vehicle and support it with suitable safety stands.
2. Attach a hose to a rear bleeder screw. Immerse the opposite end of the hose into a container partially filled with clean brake fluid.
   - Make sure the master cylinder reservoir is full.
3. Turn the ignition switch to the "ON" position.
4. Open the bleeder screw while applying moderate pressure to the brake pedal.
   - The warning lamp should light.
5. Close the bleeder screw, then release the brake pedal.
6. Apply the brake pedal using moderate to heavy pressure.
   - The lamp should go out.
7. Attach a hose to a front bleeder screw. Immerse the opposite end of the hose into a container partially filled with clean brake fluid.
   - Make sure the master cylinder reservoir is full.
8. Open the bleeder screw while applying moderate pressure to the brake pedal.
   - The warning lamp should light.
9. Close the bleeder screw before releasing the brake pedal.
10. Apply the brake pedal using moderate to heavy pressure.
    - The lamp should go out.
11. Turn the ignition switch "OFF."
    - If the warning lamp does not light during steps 4 and 7 but does light when a jumper is connected to ground, the warning switch portion of the valve has malfunctioned. Do not disassemble any portion of the valve. It must be replaced.
12. Remove the safety stands and lower the vehicle.
13. Fill the master cylinder to the proper level.

FLUID LEAKS

With the engine running at idle and the transmission in "Neutral," apply and hold constant foot pressure on the brake pedal. If the pedal gradually falls away, the hydraulic system may have internal or external leakage or incorrect component adjustment.

EXTERNAL LEAKAGE

A slight drop in the brake fluid level results from normal lining wear. An abnormally low brake fluid level indicates a leak in the system.

- For information on master cylinder fluid levels. Refer to "Filling the Master Cylinder."
- For information on fluid leaks at the pipe and hose connections. Refer to "Pipes and Hoses."
- For information on brake component leakage, refer to the proper section for overhaul or replacement procedures.

INTERNAL LEAKAGE

Internal leakage relates to a master cylinder condition.

- For information on internal master cylinder leakage, refer to the "Light Duty Truck Unit Repair Manual."

ROAD TESTING THE BRAKES

BRAKE TEST

The brakes should be tested on a dry, clean, reasonably smooth and level roadway. A true test of brake performance cannot be made if the roadway is wet, greasy or covered with loose dirt.These conditions prevent the tires from gripping the road equally. The brake test is also affected if the roadway is crowned. This throws the weight of the vehicle toward the wheels on

one side. Roadway rough enough to cause the wheels to bounce will also affect this test.

Test the brakes at different vehicle speeds using light and heavy pressure. Avoid locking the wheels and sliding the tires on the roadway. Locked wheels and sliding tires do not show brake efficiency. Heavily braked turning wheels will stop the vehicle in less distance than locked sliding wheels. More tire-to-road friction is present with a heavily braked turning tire than a sliding tire.

EXTERNAL CONDITIONS THAT AFFECT BRAKE PERFORMANCE

1. **Tires**--Tires with unequal contact and grip on the road will cause unequal braking. The tires must be equally inflated and the tread pattern of the right and left tires must be about equal.
2. **Vehicle Loading**--When the vehicle has unequal loading, the most heavily loaded wheels require more braking power than the others.
3. **Front Wheel Bearings**--Loose front wheel bearings allow the rotor to tilt and have spotty contact with the linings. This causes erratic braking action.
4. **Front End Alignment**--Misalignment of the front end, particularly with camber and caster, will cause the brakes to pull to one side.

ON-VEHICLE SERVICE

COMPONENT ADJUSTMENT

- Vacuum booster pushrod length. Refer to SECTION 5A1.
- Brake pedal travel. Refer to "Pedal Travel and Effort."
- Service brake adjustment. Refer to SECTION 5A2.
- Parking brake adjustment. Refer to SECTION 5C.

FILLING THE MASTER CYLINDER

The master cylinder reservoirs must be kept properly filled. This ensures adequate reserve fluid and prevents air from entering the hydraulic system. However, fluid expansion due to heat absorbed from the brakes and engine makes it important that the reservoir not be over filled.

Thoroughly clean the reservoir cover before removal. This helps prevent dirt from getting into the reservoirs. Remove the cover and diaphragm and add enough fluid to bring the level to within 6 mm (1/4 inch) of the lowest portion of the top of each reservoir. Fill to the full mark or to the top of the reservoir divider. Use Delco Supreme No. 11 Hydraulic Brake Fluid (GM P/N 1052535) or an equivalent DOT 3 motor vehicle brake fluid.

NOTICE: Do not use DOT-5 silicone brake fluid in an antilock brake system. Excessive wear of the brake components and other conditions can occur from using the wrong fluid.

NOTICE: Do not use fluid that contains a petroleum base. Do not use a container that has been used for petroleum based fluids or is wet with water. Petroleum based fluids will cause swelling and distortion of rubber parts in the hydraulic brake system and water will lower the brake fluid's boiling point. Keep all fluid containers capped to prevent contamination.

BLEEDING THE BRAKE HYDRAULIC SYSTEM

Bleeding is necessary if air has entered the hydraulic brake system.

It may be necessary to bleed the system at all four wheels if a low fluid level allowed the air to enter the system, or the brake pipes have been disconnected at the master cylinder or the combination valve. If a pipe is disconnected at one wheel, then only bleed that particular wheel.

The time required to bleed the hydraulic system when the master cylinder is removed can be reduced by bleeding the master cylinder before installing it on the vehicle.

If the brake Electro-Hydraulic Control Unit (EHCU) module has been replaced or has air trapped in it, bleed it first. Refer to SECTION 5E1.

MANUAL BLEEDING

- Relieve the vacuum reserve by applying the brakes several times with the ignition switch in the "OFF" position.

NOTICE: Brake fluid will damage painted surfaces. Brake fluid can also damage electrical connections. Use shop cloths, suitable containers and fender covers to prevent brake fluid from contacting such surfaces. Always re-seal and wipe off brake fluid containers to prevent spills.

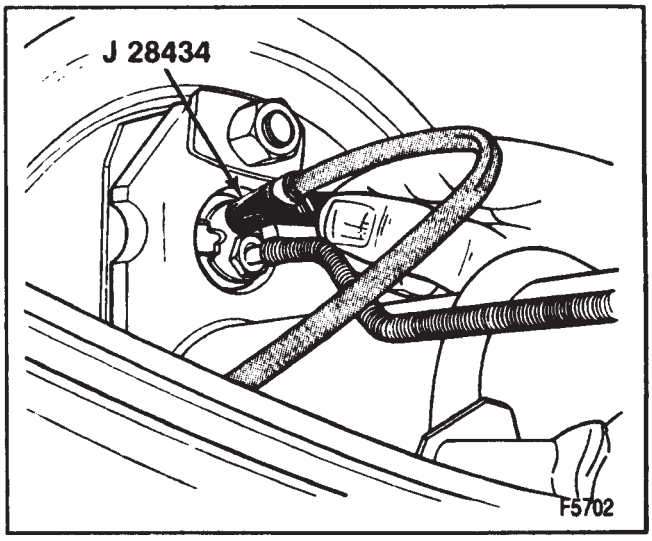

Figure 3—Using the Wheel Cylinder Bleeder Wrench

Tool Required:
J 28434 Wheel Cylinder Bleeder Wrench

1. Fill the master cylinder reservoirs with Delco Supreme No. 11 Hydraulic Brake Fluid (GM P/N 1052535) or an equivalent DOT 3 motor vehicle brake fluid.
   - Maintain the fluid level in the reservoir during bleeding.
2. If the master cylinder is suspected to have air in the bore, bleed it before any wheel cylinder or caliper.
   - Disconnect the forward brake pipe connection at the master cylinder.
   - Allow the brake fluid to flow from the connector port.
   - Connect but do not tighten the brake pipe.
   - Slowly apply the brake pedal and allow the air to bleed from the loose fitting.
   - Tighten the fitting before releasing the pedal.
   - Wait 15 seconds.
   - Repeat this sequence, including the 15-second wait, until all air is purged from the bore.
   - After all the air has been removed from the forward connection, repeat this procedure for the rear pipe.
3. If the four wheel antilock unit is suspected to have air trapped inside, it must be bled next. Refer to SECTION 5E1.
4. Bleed each wheel in the following sequence:
   - Right rear
   - Left rear
   - Right front
   - Left front
5. Attach J 28434 to the wheel cylinder/caliper bleeder screw (figure 3).
   - Immerse the opposite end of the hose into a container partially filled with clean brake fluid.
6. Slowly apply the brake pedal one time and hold.
7. Loosen the bleeder screw to purge the air from the wheel cylinder/caliper.
8. Tighten the bleeder screw and slowly release the pedal.
9. Wait 15 seconds
10. Repeat this sequence, including the 15-second wait until all air is purged from the wheel cylinder/caliper.
11. Continue steps 8 - 13 at each wheel until the entire brake system is bled.
12. Check the brake pedal for "sponginess" and the brake warning lamp for an indication of unbalanced pressure. Repeat the bleeding procedure to correct either of these conditions.

PRESSURE BLEEDING

A diaphragm type pressure bleeder must be used. It must have a rubber diaphragm between the air supply and the brake fluid to prevent air, moisture, oil, and other contaminants from entering the hydraulic system.

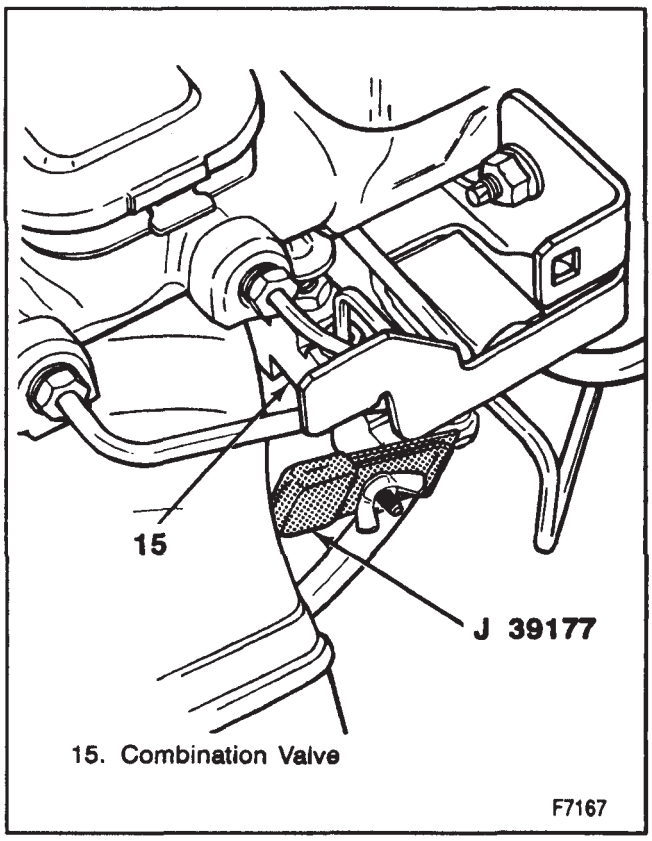

Figure 4—Combination Valve Pressure Bleeding Tool

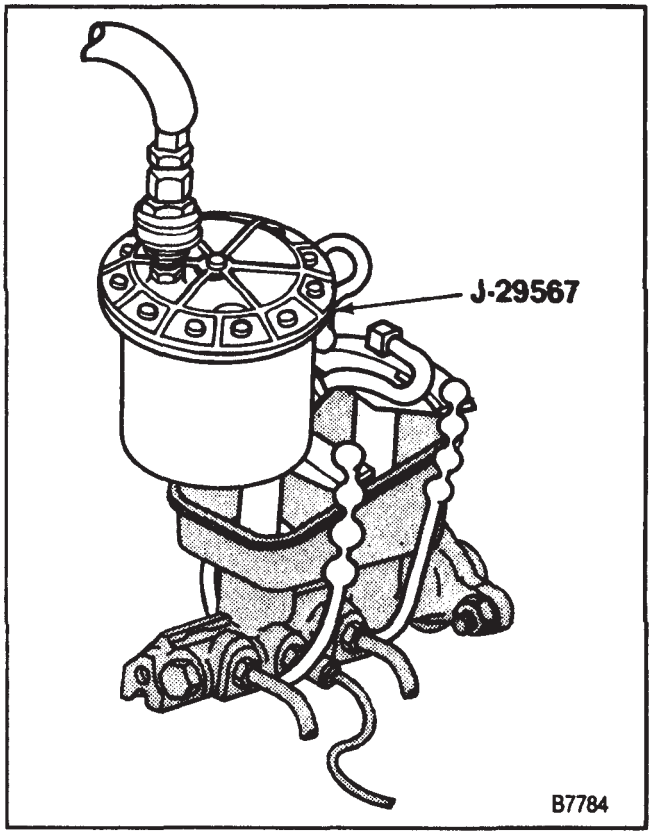

Figure 5—Bleeder Adapter

NOTICE: Brake fluid will damage painted surfaces. Brake fluid can also damage electrical connections. Use shop cloths, suitable containers and fender covers to prevent brake fluid from contacting such surfaces. Always re-seal and wipe off brake fluid containers to prevent spills.

Tools Required:
J 29567 Brake Bleeder Adapter
J 39177 Combination Valve Pressure Bleeding Tool
J 28434 Wheel Cylinder Bleeder Wrench

1. Fill the pressure tank at least 2/3 full of brake fluid.
   - The bleeder must be bled each time fluid is added.
2. Charge the bleeder to 140-170 kPa (20 to 25 psi).
3. Use J 39177 to depress and hold the valve stem on the combination valve (figure 4).
4. Install the bleeder adapter (figure 5).
5. Bleed each wheel in the following sequence:
   - Right rear
   - Left rear
   - Right front
   - Left front
6. Connect the hose from the bleeder to the adapter at the master cylinder.
7. Open the tank valve.
8. Attach J 28434 to a brake bleeder screw (figure 3).
9. Immerse the opposite end of the hose into a container partially filled with clean brake fluid.
10. Open the bleeder screw at least 3/4 of a turn and allow the fluid to flow until no air is seen in the fluid.
11. Close the bleeder screw.
12. Repeat steps 8 through 11 at all the wheels.
13. Check the brake pedal for "sponginess."
    - Repeat the bleeding procedure if this condition is found.
14. Remove J 39177.
15. Disconnect the line from the bleeder adapter.
16. Remove the bleeder adapter.
17. Fill the master cylinder to the proper level.

HOSE REPLACEMENT

Clean

- Clean all dirt, grease, and other foreign material off the hose fittings at both ends.

Flexible Hose Inspection

The flexible hoses should be inspected for any signs of road damage, cracks, or chafing of the outer cover. If any of these conditions are visible, replace the hose.

Front Hose Replacement

Remove or Disconnect (Figure 6 or 7)

1. Steel pipe.
2. Retainer (2).
3. Prevailing torque nut (4) and bolt (5).
4. Bolt (6) and gaskets (3).

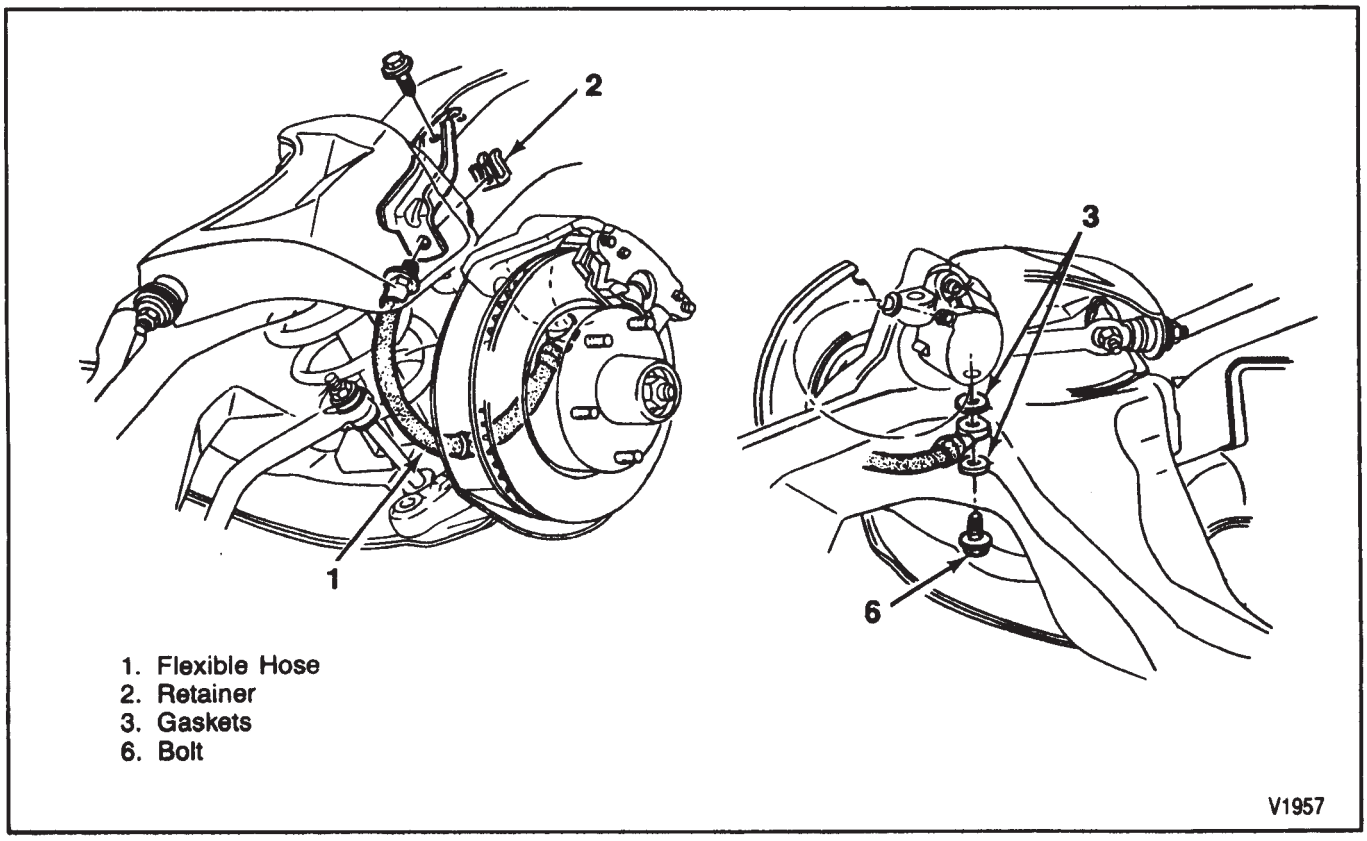

Figure 6—Front Brake Hose (2WD)

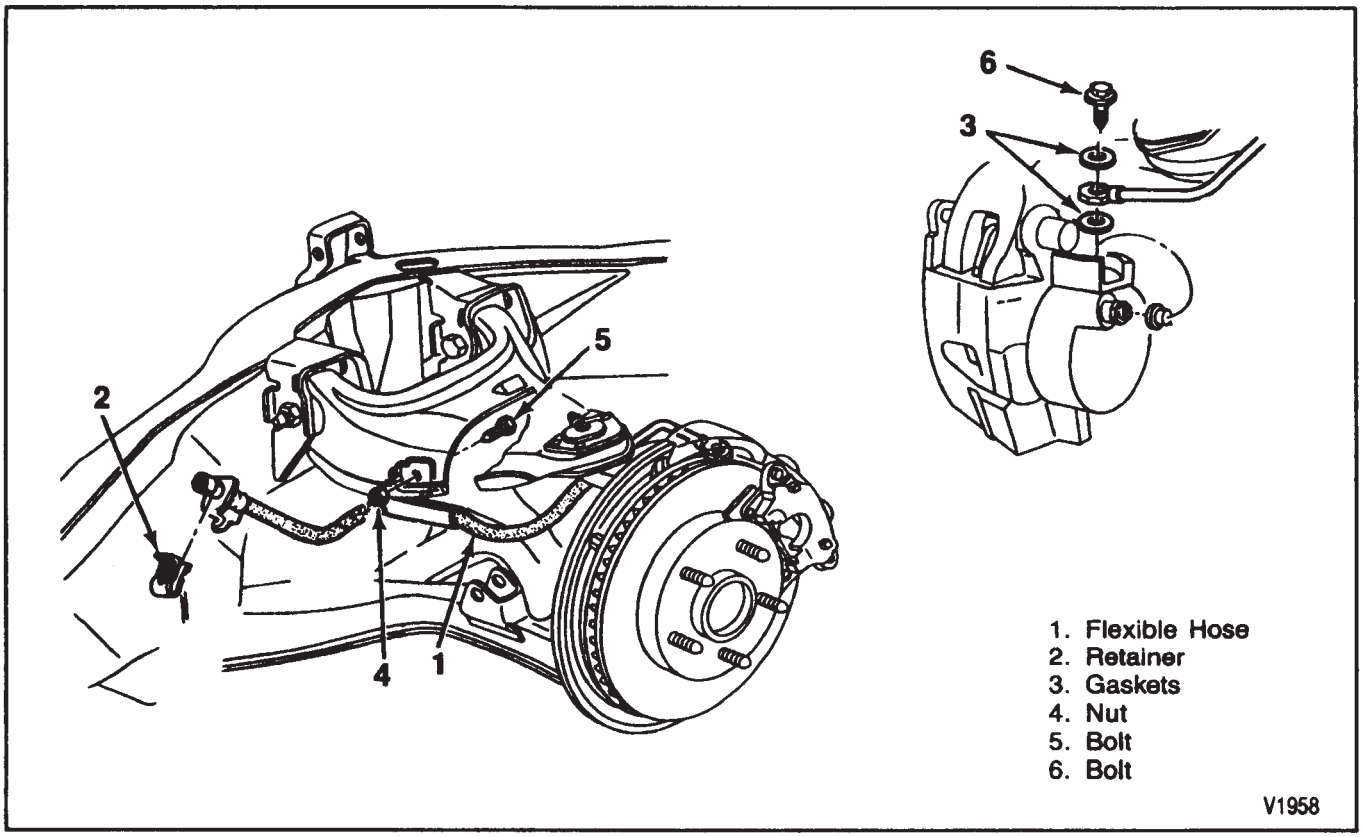

Figure 7—Front Brake Hose (4WD)

5. Hose (1).

Install or Connect (Figure 6 or 7)

1. Hose (1).
   - The hose must not be twisted.
2. Gaskets (3).
   - Use new brass gaskets when installing the hose.

NOTICE: See "Notice" on page 5A-1.

3. Bolt (6).

Tighten

- Bolt (6) to 44 N·m (32 ft. lbs.).

4. Bolt (5) and prevailing torque nut (4).
5. Retainer (2).
6. Steel pipe.
7. Bleed the brakes. Refer to "Bleeding the Brake Hydraulic System."

Important

- The hose must not be twisted or contact any suspension components after installation.

Rear Hose Replacement

Remove or Disconnect (Figure 8)

1. Steel pipe.
2. Retainer (7).
3. Bolt (8).
4. Hose (6).

Install or Connect (Figure 8)

1. Hose (6).
   - The hose must not be twisted.
2. Bolt (8).

Tighten

- Bolt (8) to 17 N·m (13 ft. lbs.).

3. Retainer (7).
4. Steel pipe.
5. Bleed the brakes. Refer to "Bleeding the Brake Hydraulic System."

Important

- The hose must not be twisted or contact any suspension components after installation.

PIPE REPLACEMENT

When replacing a steel brake pipe, always use steel piping designed to withstand high pressure and resist corrosion. The replacement pipe must be the same size as the one removed.

NOTICE: Never use a lower quality tubing for hydraulic brake pipes. Copper tubing, for example, is subject to fatigue cracking and corrosion that can result in brake failure.

Brake pipes that run parallel to each other must maintain a 6-mm (1/4-inch) clearance.

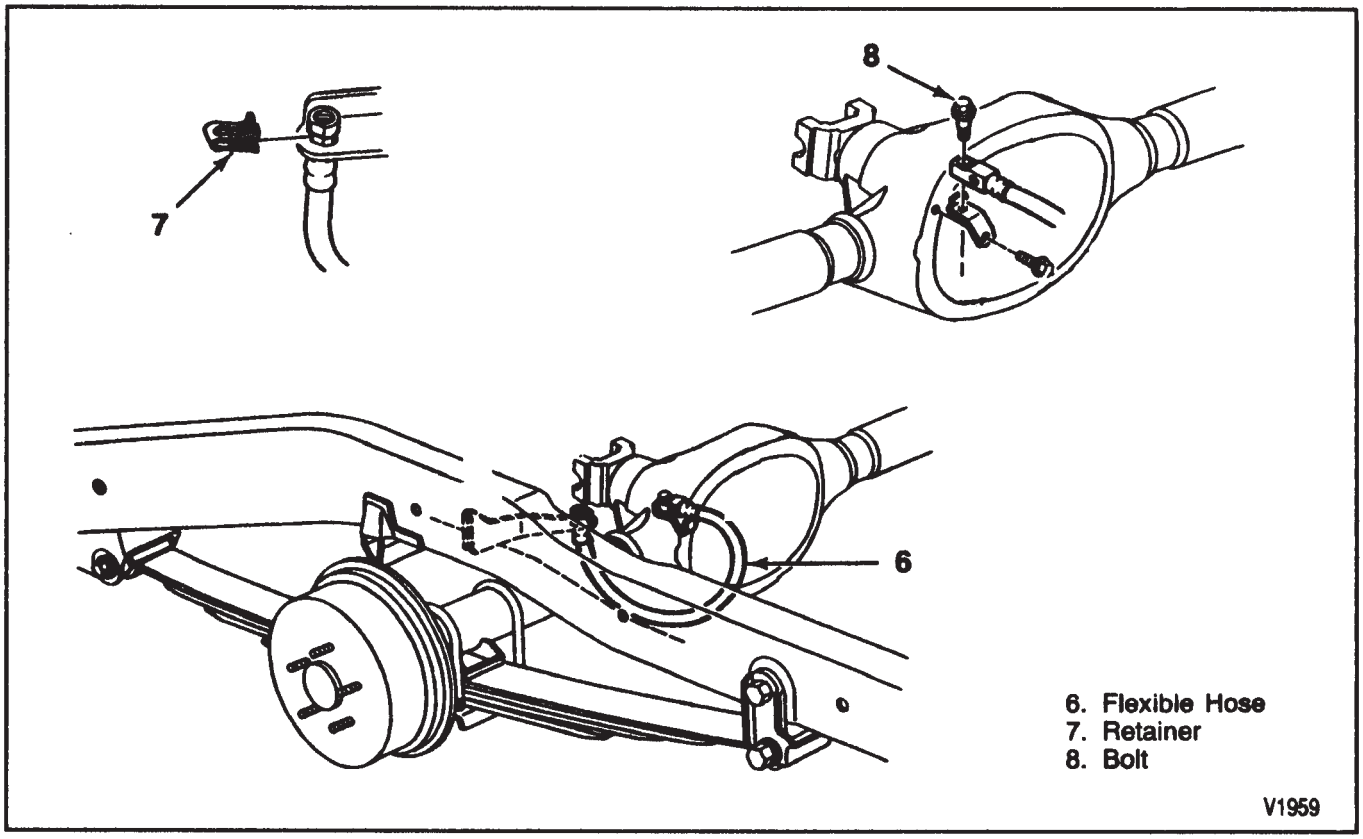

Figure 8—Rear Brake Hose

PIPE FLARING

Tools Required:

J 23530 Flaring Tool

J 23533-01 Tube Cutter

In order to ensure a proper flare, a double lap flaring tool must be used (figure 9). When using the tool, follow the instructions furnished by the tool manufacturer. Always inspect newly formed flares for cracks or distortions that might cause leaks. After flaring, blow out the brake pipe with unlubricated, dry, compressed air before installing it on the vehicle.

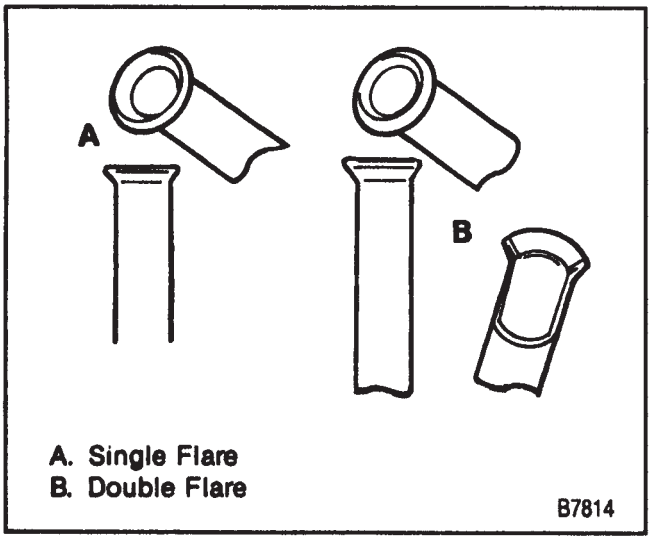

Figure 9—Pipe Flares

NOTICE: A double lap flaring tool must be used. Single flaring tools cannot produce a flare strong enough to hold the pressure in a brake system.

1. Always use the correct size steel pipe and fittings.
   - The outside diameter of the pipe is used to specify the size.
2. Cut the pipe to length.
   - Add 3 mm (1/8 inch) to the length for each flare.
3. Flare the pipe ends by following the instructions with the tool.
4. Bend the pipe to match the old one using a pipe bender.

COMBINATION VALVE REPLACEMENT

- The combination valve is not repairable and must be replaced as an assembly.
- Care must be taken to prevent brake fluid from contacting any painted surface.

Remove or Disconnect (Figure 10 or 11)

1. Hydraulic pipes from the combination valve.
   - Plug the pipes to prevent the loss of fluid or the entrance of dirt.
2. Warning switch connector.
3. Nuts (9).

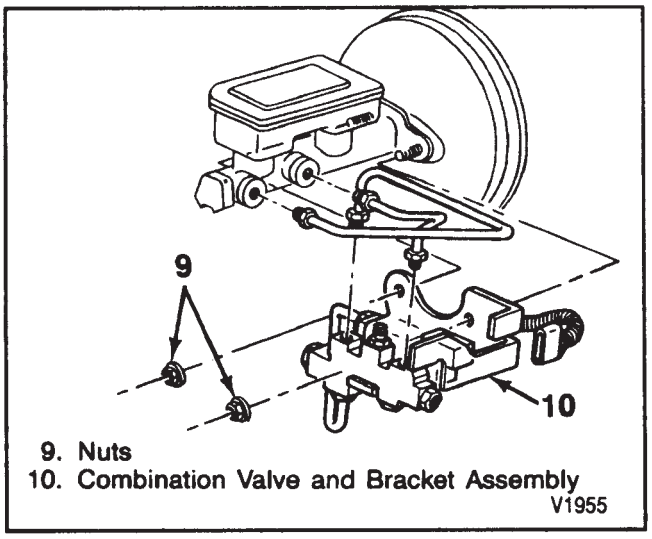

Figure 10—Removing the Combination Valve (RWAL)

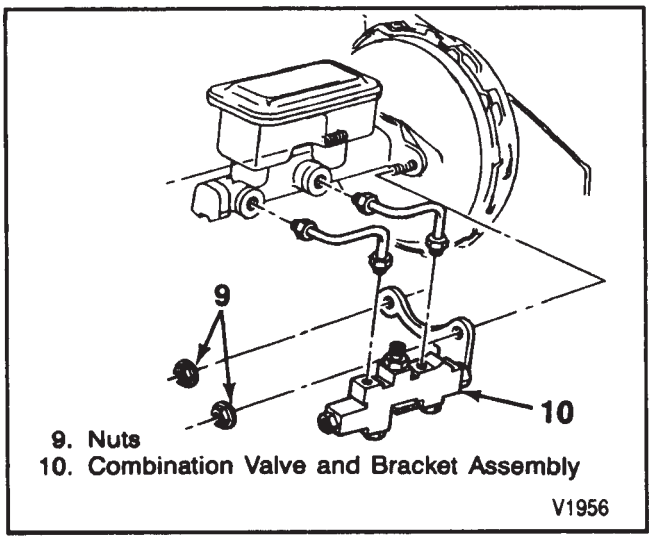

Figure 11—Removing the Combination Valve (4WAL)

4. Combination valve (10).

Install or Connect (Figure 10 or 11)

1. Combination valve on the bracket.

NOTICE: See "Notice" on page 5A-1 of this section.

2. Nuts (9).

Tighten

- Nut (9) to 17 N·m (12 ft. lbs.).

3. Warning switch connector.
4. Hydraulic pipes.
5. Bleed the brake system. Refer to "Bleeding the Brake Hydraulic System."

STOPLAMP SWITCH

Stoplamp switch replacement and adjustment procedures are listed in this section. For electrical diagnosis refer to SECTION 8A.

SWITCH REPLACEMENT

Remove or Disconnect (Figure 12)

1. Negative battery cable.
2. Trim panel. Refer to SECTION 10A4.
3. Electrical connector.
4. Switch (22 or 23).

Install or Connect (Figure 12)

1. Switch (22 or 23).

Adjust

- Refer to "Switch Adjustment."

2. Electrical connector.
3. Trim panel. Refer to SECTION 10A4.
4. Negative battery cable.

SWITCH ADJUSTMENT

The stoplamp switch will self-adjust the first time the brake pedal returns to its stop after the switch is installed.

1. Apply the brake pedal and press the switch in until it firmly seats in the clip.
   - "Clicks" can be heard as the threaded portion of the switch is pushed through the clip.
2. Pull the brake pedal against the pedal stop until a "click" can no longer be heard.

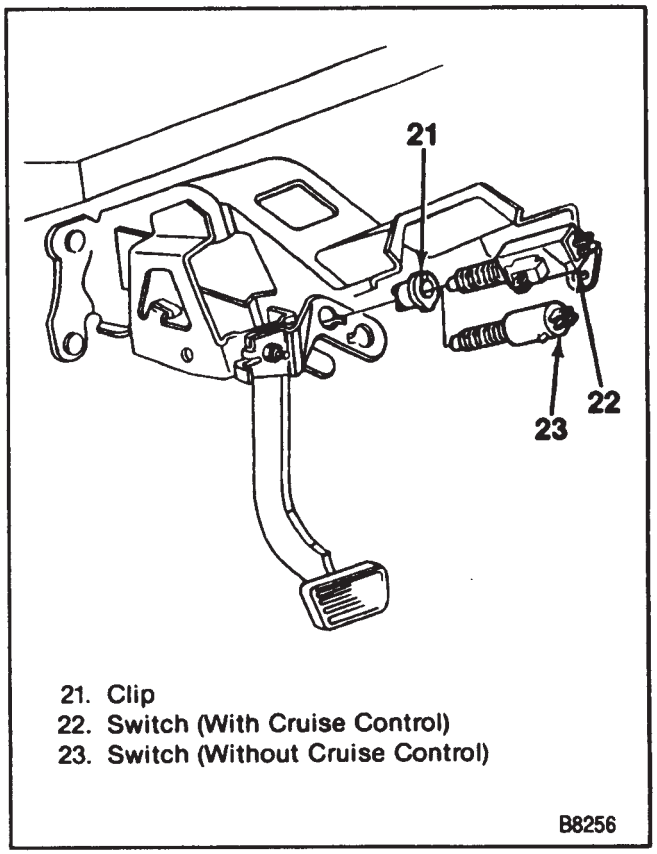

Figure 12—Removing the Stoplamp Switch

SERVICE BRAKE PEDAL REPLACEMENT

Remove or Disconnect (Figure 13)

1. Lower dash assembly. Refer to SECTION 10A4.
2. Nut (7) and bolt (12).
3. Stoplamp actuator (6).
4. Cotter pin (3).
5. Flat washer (9) and pushrod (10).
6. Wave washer (11).
7. Prevailing torque nut (1) and bolt (2).
8. Brake pedal (8).
9. Bushings (5) and spacer (4).

Install or Connect (Figure 13)

1. Spacer (4) and bushings (5) into the brake pedal (8).
2. Brake pedal (8).

NOTICE: See "Notice" on page 5A-1 of this section.

3. Bolt (2) and prevailing torque nut (1).

Tighten

- Nut (1) to 35 N·m (26 ft. lbs.).

4. Wave washer (11) and pushrod (10).
5. Washer (9) and cotter pin (3).

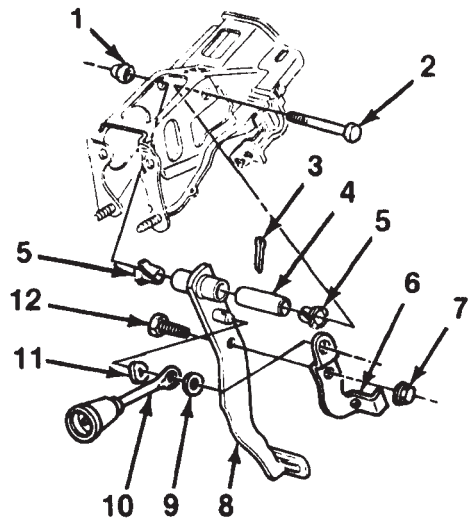

1. Prevailing Torque Nut
2. Bolt
3. Cotter Pin
4. Spacer
5. Bushing
6. Stoplamp Actuator
7. Nut
8. Brake Pedal
9. Flat Washer
10. Pushrod
11. Wave Washer
12. Bolt

F5708

Figure 13—Brake Pedal Components

6. Stoplamp actuator (6).
7. Bolt (12) and nut (7).
8. Lower dash assembly. Refer to SECTION 10A4.

MASTER CYLINDER REPLACEMENT

Remove or Disconnect (Figure 14)

1. Apply the parking brake.
2. Brake pipes.
   - Plug the pipes to prevent the loss of fluid or the entrance of contaminants.
3. Prevailing torque nuts (1) and bracket (3).
4. Master cylinder (2).

Install or Connect (Figure 14)

- Before installation, refer to "Master Cylinder Bench Bleeding."

1. Master cylinder (2).

NOTICE: See "Notice" on page 5A-1.

2. Bracket (3) and prevailing torque nuts (1).

Tighten

- Nuts (1) to 27 N·m (20 ft. lbs.).

3. Brake pipes.
4. Bleed the brakes. Refer to "Bleeding the Brake Hydraulic System."
5. Release the parking brake.

MASTER CYLINDER BENCH BLEEDING

The purpose of bench bleeding the master cylinder is to remove the air from it prior to installation. This reduces the amount of bleeding needed after it is installed on the vehicle.

1. Plug the outlet ports and mount the master cylinder in a vise with the front end tilted slightly down.
2. Fill the reservoir with clean brake fluid.

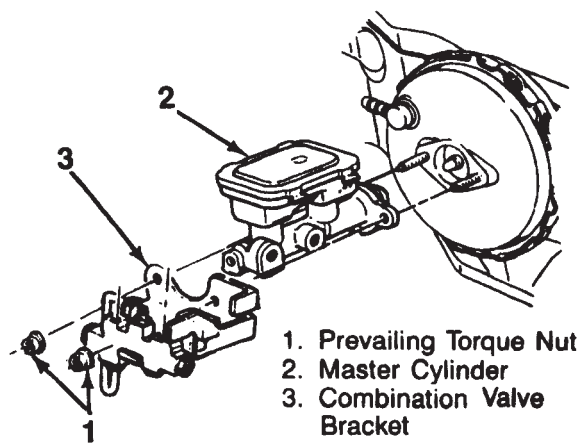

1. Prevailing Torque Nut
2. Master Cylinder
3. Combination Valve Bracket

V0597

Figure 14—Removing the Master Cylinder

3. Using a smooth rounded end tool, stroke the primary piston about 25 mm (1 inch) several times.
   - As air is bled from the master cylinder, the resistance to the primary piston travel will not allow the full 25-mm (1-inch) stroke.
4. Reposition the master cylinder in the vise with the front end of the master cylinder tilted slightly up.
5. Again stroke the primary piston about 25 mm (1 inch) several times.
6. Reposition the master cylinder in the vise to the level position.
7. Loosen the plugs one at a time and push the piston into the bore to force the air from the cylinder.
   - To prevent air from being sucked back into the cylinder, tighten the plug(s) before allowing the piston to return to its original position.
8. Fill the reservoir.
   - Normal bleeding procedures should be followed after the master cylinder is installed.

SPECIFICATIONS

BRAKE SYSTEMS

SYSTEM	FRONT BRAKES	REAR BRAKES	BRAKE ASSIST
JM3	Disc 10.5 x 1.03	Drum 9.5 x 2	240mm Tandem Diaphragm
JM5	Disc 10.5 x 1.03	Drum 9.5 x 2	200mm Tandem Diaphragm
JM7	Disc 10.5 x 1.03	Drum 9.5 x 2	240mm Single Diaphragm

T2020

ROTOR THICKNESS

ORIGINAL	THINNEST (REFINISHING)	REPLACEMENT (DISCARD)
26.42mm (1.03 in.)	24.89mm (.980 in.)	24.51 mm (.965 in.)

T2022

DRUM DIAMETER

ORIGINAL	MAXIMUM FINISH	REPLACEMENT (DISCARD)
241.3 mm (9.50 in.)	242.82 mm (9.56 in.)	243.59 mm (9.59 in.)

T2072

FASTENER TIGHTENING SPECIFICATIONS

	N·m	Ft. Lbs.
Brake Pedal Mounting Nut	35	26
Caliper Mount Bolt	50	37
Front Flex Hose Bolt	44	32
Master Cylinder Mounting Nut	27	20
Vacuum Booster Mounting Nut	22	16
Rear Brake Hose to Bracket Bolt	17	13
Steel Brake Line Fittings	22	16

T2023

SPECIAL TOOLS

1. 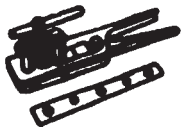 J 23530

2. J 23533-01

3. J 39177

4. J 29567

5. J 28663

6. J 28434

1. Flaring Tool
2. Tube Cutter
3. Combination Valve Pressure Bleeding Tool
4. Brake Bleeder Adapter
5. Brake Pedal Effort Gage
6. Wheel Cylinder Bleeder Wrench

F6550

SECTION 5A1

HYDRAULIC BRAKE BOOSTER SYSTEM

NOTICE: When fasteners are removed, always reinstall them at the same location from which they were removed. If a fastener needs to be replaced, use the correct part number fastener for that application. If the correct part number fastener is not available, a fastener of equal size and strength (or stronger) may be used. Fasteners that are not reused, and those requiring thread locking compound will be called out. The correct torque value must be used when installing fasteners that require it. If the above conditions are not followed, parts or system damage could result.

CONTENTS

SUBJECT	PAGE
General Description	5A1-1
Diagnosis of the Vacuum Booster	5A1-1
On-Vehicle Service	5A1-2
Booster Assembly	5A1-2
Gaging Procedure	5A1-3
Check Valve, Hose, and Routing	5A1-3
Specifications	5A1-5
Special Tools	5A1-6

GENERAL DESCRIPTION

There are three vacuum suspended boosters available. The sizes are: 240 mm single, 200 mm and 240 mm tandem diaphragm units. With the brake pedal released, a single or tandem diaphragm vacuum suspended booster has vacuum applied to both sides of the diaphragm(s). Applying the brake pedal allows air at atmospheric pressure to enter one side of the diaphragm(s). This difference in pressure provides the power assist for braking.

DIAGNOSIS OF THE VACUUM BOOSTER

PROBLEM	POSSIBLE CAUSE	CORRECTION
Hard Pedal	1. Broken or damaged hydraulic brake lines.	1. Inspect and replace as necessary.
	2. Faulty vacuum check valve or grommet.	2. Replace.
	3. Collapsed or damaged vacuum hose.	3. Replace hose.
	4. Plugged or loose vacuum fitting.	4. Clean or tighten.
	5. Faulty air valve seal or support plate.	5. Replace. Refer to the Light Duty Truck Unit Repair Manual.
	6. Damaged floating control valve.	6. Replace. Refer to the Light Duty Truck Unit Repair Manual.
	7. Bad stud welds on front or rear housing or power head.	7. Replace unless easily repaired.
	8. Faulty booster diaphragm.	8. Replace. Refer to the Light Duty Truck Unit Repair Manual.
	9. Restricted air filter element.	9. Replace.
	10. Worn or distorted reaction plate or levers.	10. Replace plate or levers. Refer to the Light Duty Truck Unit Repair Manual.
	11. Cracked or broken power pistons or retainer.	11. Replace power pistons and piston rod retainer. Refer to the Light Duty Truck Unit Repair Manual.

DIAGNOSIS OF THE VACUUM BOOSTER (cont'd)

PROBLEM	POSSIBLE CAUSE	CORRECTION
Grabby Brakes (Apparent Off-On Condition)	1. Broken or damaged hydraulic brake lines. 2. Low fluid level in the master cylinder. 3. Faulty master cylinder seals. 4. Cracked master cylinder casing. 5. Leaks in front calipers or rear wheel cylinders or in pipes or connections. 6. Air in hydraulic system.	1. Inspect and replace as necessary. 2. Fill reservoirs with proper brake fluid. Check for leaks. 3. Repair or replace as necessary. 4. Replace. 5. Inspect and repair as necessary. 6. Bleed system.
Brakes Fail to Release	1. Blocked passage in power piston. 2. Air valve sticking shut. 3. Broken piston return spring or air valve spring. 4. Tight brake pedal linkage. 5. Misadjusted brake light or cruise control switches.	1. Inspect and repair or replace as necessary. Refer to the Light Duty Truck Unit Repair Manual. 2. Check for proper lubrication of air valve O-ring seal. Refer to the Light Duty Truck Unit Repair Manual. 3. Replace. Refer to the Light Duty Truck Unit Repair Manual. 4. Repair or replace as necessary. 5. Readjust switches.
		D0106

ON-VEHICLE SERVICE

BOOSTER ASSEMBLY

Remove or Disconnect (Figures 1, 2, and 3)

- Apply the parking brake.

1. Master cylinder mounting nuts (1).
2. Master cylinder (2).
   - Support the master cylinder.
3. Vacuum hose from the booster.
4. Nut (107).
5. Bolt (112) and washers (109 and 111).
6. Nuts (6).

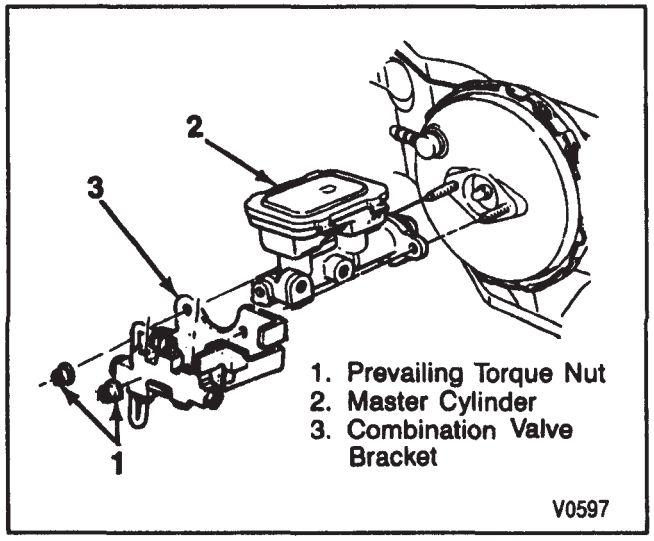

Figure 1—Removing the Master Cylinder

- The nuts must be removed from inside the vehicle.

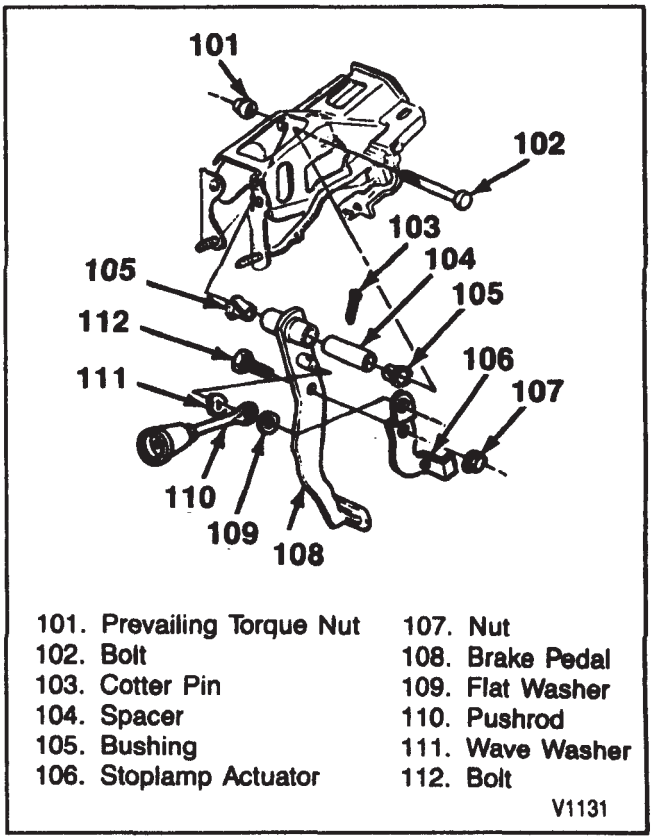

Figure 2—Removing the Booster Input Eyelet

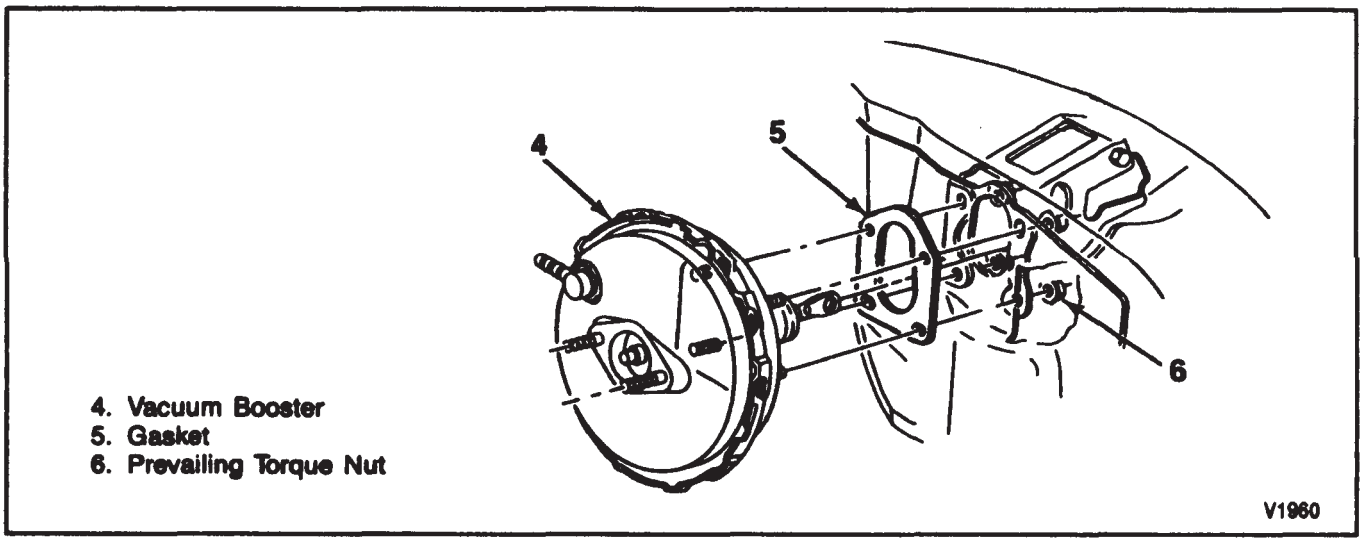

Figure 3—Removing the Vacuum Booster

7. Vacuum booster (4).
8. Gasket (5).

Install or Connect (Figures 1, 2, and 3)

NOTICE: For steps 3, 7, and 10 see "Notice" on page 5A1-1.

1. Gasket (5).
2. Vacuum booster (4).
3. Prevailing torque nuts (6).

Tighten

- Nuts (6) to 22 N·m (16 ft. lbs.).

4. Booster pushrod
5. Vacuum hose.
6. Bolt (112) and washers (109 and 111) through the eyelet and brake pedal.
7. Nut (107).

Tighten

- Nut (107) to 22 N·m (16 ft.lbs.).

8. Gage the Booster rod. Refer to "Gaging Procedure."
9. Master cylinder (2).
10. Master cylinder mounting nuts (1).

Tighten

- Nuts (1) to 27 N·m (20 ft. lbs.).

- Release the parking brake.

GAGING PROCEDURE

Measure (Figure 4)

Tool Required:
J 37839 Pushrod Height Gage

- The piston rod using J 37839 (figure 4).
  — Gage the booster with 85.0 kPa (25 In. Hg) vacuum or maximum engine vacuum.
  — Check the maximum and minimum rod length.
- If the piston rod is not within limits, obtain a service adjustable piston rod and adjust the rod to the correct measurement.

CHECK VALVE, HOSE, AND ROUTING

Vacuum line routings are shown in figures 5, 6, 7, and 8.

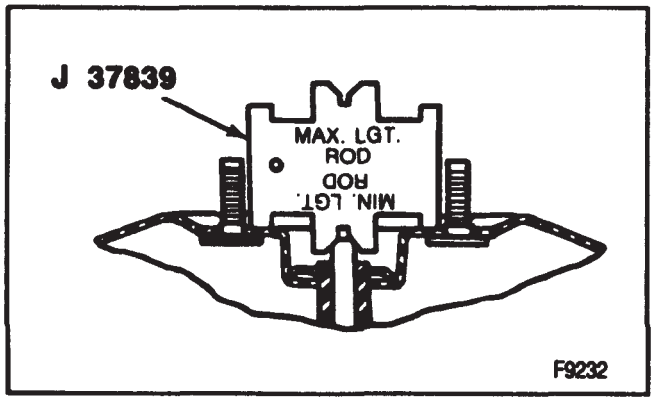

Figure 4—Gaging the Piston Rod

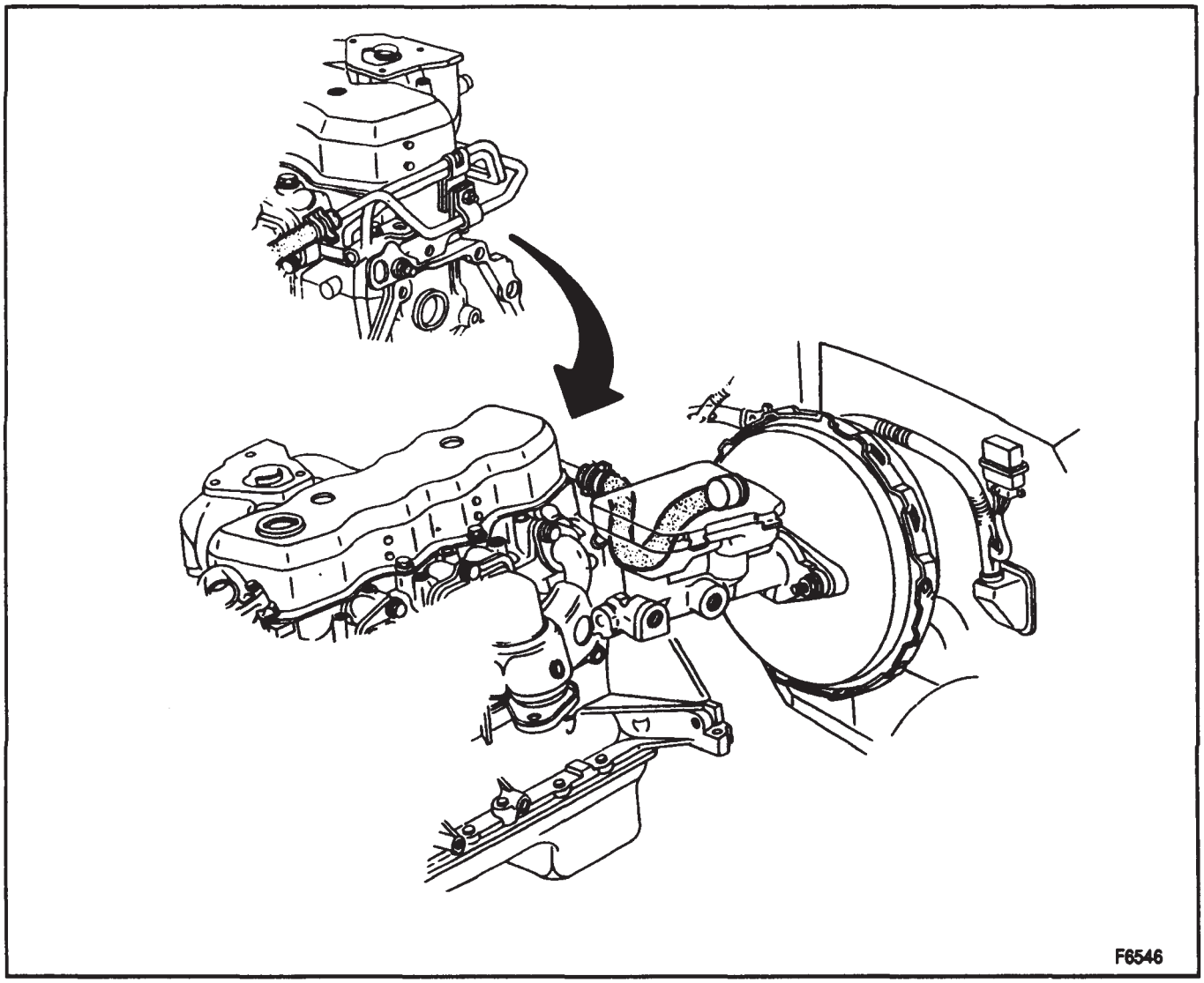

Figure 5—Vacuum Line Routing (2.5L)

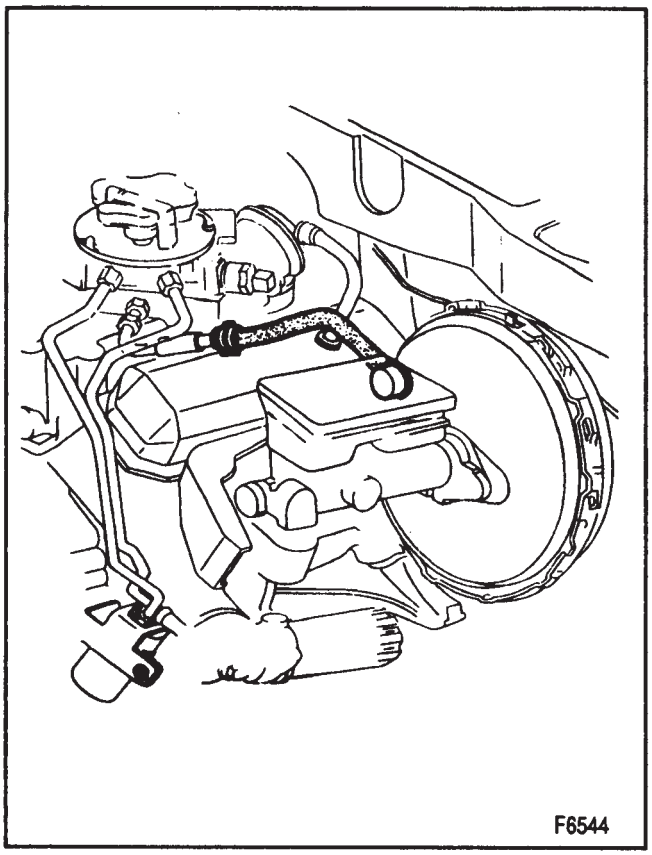

Figure 6—Vacuum Line Routing (2.8L)

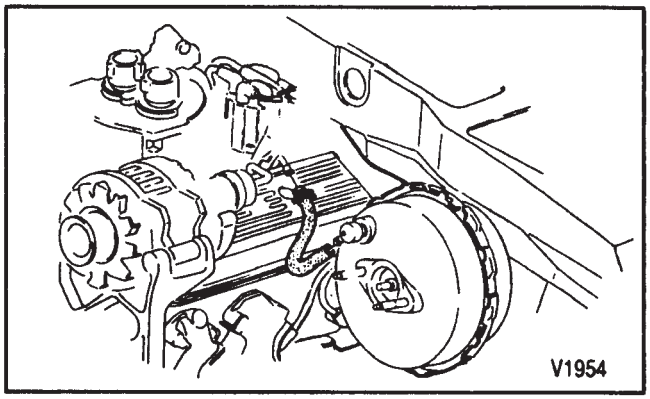

Figure 7—Vacuum Line Routing (4.3L VIN W)

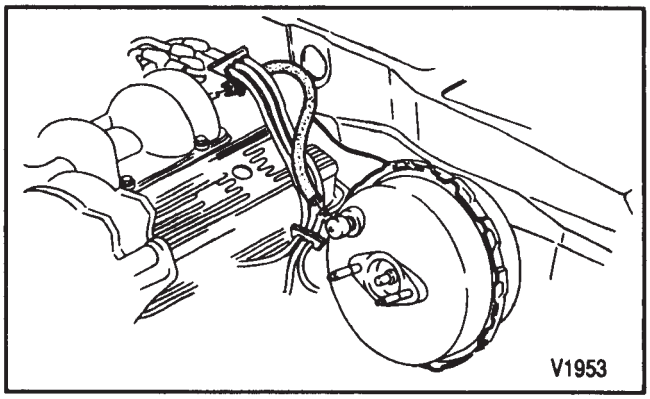

Figure 8—Vacuum Line Routing (4.3L VIN Z)

SECIFICATIONS

BRAKE SYSTEMS

SYSTEM	FRONT BRAKES	REAR BRAKES	BRAKE ASSIST
JM3	Disc 10.5 x 1.03	Drum 9.5 x 2	240mm Tandem Diaphragm
JM5	Disc 10.5 x 1.03	Drum 9.5 x 2	200mm Tandem Diaphragm
JM7	Disc 10.5 x 1.03	Drum 9.5 x 2	240mm Single Diaphragm

T2020

FASTENER TIGHTENING SPECIFICATIONS

Item	N·m	Ft. Lbs.
Master Cylinder Mounting Nut	27	20
Vacuum Booster Mounting Nut	22	16

T2345

SPECIAL TOOLS

1. J 37839

1. Power Brake Push Rod Height Gage

V1377

SECTION 5A2

HYDRAULIC FOUNDATION BRAKES

CAUTION: When servicing brake parts, do not create dust by grinding or sanding brake linings or by cleaning wheel brake parts with a dry brush or compressed air. Many brake parts contain asbestos fibers that can become airborne if dust is created during servicing. Breathing dust containing asbestos fibers may cause serious bodily harm. A water dampened cloth or water based solution should be used to remove any dust on brake parts. Equipment is commercially available to perform this washing function. These wet methods will prevent asbestos fibers from becoming airborne.

NOTICE: When fasteners are removed, always reinstall them at the same location from which they were removed. If a fastener needs to be replaced, use the correct part number fastener for that application. If the correct part number fastener is not available, a fastener of equal size and strength (or stronger) may be used. Fasteners that are not reused, and those requiring thread locking compound will be called out. The correct torque value must be used when installing fasteners that require it. If the above conditions are not followed, parts or system damage could result.

NOTICE: Any new drum or rotor must have the protective coating removed from the friction surface before being placed in service. Use Goodwrench Brake Parts Cleaner (GM P/N 12345754 or equivalent) and wipe the surface clean with clean cloths. Do not use gasoline, kerosene, or other oil base solvents which may leave an oily residue. This residue is damaging to brake linings and flammable.

CONTENTS

SUBJECT	PAGE
General Description	5A2- 2
Disc Brakes	5A2- 2
Description	5A2- 2
Diagnosis of the Disc Brakes	5A2- 2
Lining Inspection	5A2- 2
Rotor Inspection	5A2- 2
On-Vehicle Service of Disc Brakes	5A2- 4
Lining Replacement	5A2- 4
Caliper Replacement	5A2- 5
Drum Brakes	5A2- 7
Description	5A2- 7
Diagnosis of the Drum Brakes	5A2- 7
Drum Inspection	5A2- 7
On-Vehicle Service of Drum Brakes	5A2- 7
Lining Replacement	5A2- 7
Adjustment	5A2- 8
Wheel Cylinder Replacement	5A2- 9
Unit Repair	5A2- 9
Rotor Refinishing	5A2- 9
Caliper	5A2- 9
Drum Refinishing	5A2-11
Wheel Cylinder	5A2-11
Specifications	5A2-12
Special Tools	5A2-12

GENERAL DESCRIPTION

This section covers the part of the braking system located at the wheels. The braking system will vary on each model in accordance with the antilock system. The chart provided in "Specifications" will help determine which system is being used. For service information regarding all other components of the brake system, refer to SECTIONS 5A, 5A1, 5C, 5E1, 5E3, or 8A.

LINING REPLACEMENT

GM replacement brake lining material is recommended for this vehicle to maintain the balance between the front and rear brake performance. GM replacement brake parts have been carefully selected to provide the proper brake balance for the purposes of stopping distance and control over the full range of operating conditions. Installation of front or rear brake lining material with performance characteristics different from the recommended GM replacement parts can change the intended brake balance for this vehicle.

SERVICING INFORMATION

- Replace all parts and components included in the repair kits.
- Lubricate the parts as specified.
- Do not use lubricated shop air on brake parts. Rubber component damage may result.
- If any hydraulic component has been removed or disconnected, it may be necessary to bleed all or part of the brake system.
- Replace pads and linings in axle sets only.
- The torques specified are for dry, unlubricated fasteners.
- Perform service operations on a clean bench, free from mineral oil and other contaminants.
- Extreme care must be taken when doing any work around the antilock components to prevent damage or misalignment.
- Before moving the vehicle, pump the brake pedal several times to make sure it is firm. Do not move the vehicle until a firm pedal has been obtained. Check the brake fluid level in the master cylinder after pumping the brakes.

DISC BRAKES

DESCRIPTION

The disc brake assembly consists of a caliper and piston assembly, rotor, linings, four wheel antilock speed sensor assembly (when used), and anchor plate. The caliper mounts to the anchor plate in a way that allows the caliper to move laterally against the rotor. The caliper is a one-piece casting with the piston bore on the inboard side. The piston bore has a groove in it that a square-cut rubber seal fits in. This provides the hydraulic seal between the piston and the cylinder wall.

OPERATION

Applying the brake pedal causes hydraulic pressure to move the piston. The piston then forces the inboard brake lining against the inboard braking surface of the rotor. Increasing the force against the rotor, causes the caliper assembly to move inboard. The outer brake lining will then contact the outboard braking surface of the rotor. The force of the two brake linings provides the desired clamping action on the rotor.

Releasing the brake pedal relieves the pressure applied to the piston. The square cut seal on the piston then returns to its normal position, allowing a running clearance between the brake linings and rotor.

DIAGNOSIS OF THE DISC BRAKES

LINING INSPECTION

Check the outer pad by looking at each end of the caliper (figure 1).

Check the inner pad by looking down through the inspection hole in the top of the caliper housing. Whenever the lining is worn to about the thickness of the pad, it should be removed for further measurements. The pad should be replaced anytime the lining is worn to within 0.08 mm (1/32 inch) of a rivet head or the pad itself.

The disc brake pads have a wear indicator that makes a noise when the linings are worn and need replacement (figure 2).

Check the flatness of the brake pads. Place the inboard and outboard lining surfaces together and check for a gap between the lining surfaces. This gap should not exceed 0.13 mm (0.005 inch) at the middle of the lining surfaces. This applies to new or used brake pads.

ROTOR INSPECTION

In manufacturing brake rotors, all tolerances regarding surface finish, parallelism, and lateral runout are held very close. Maintaining these tolerances provides the surface necessary to prevent a loss in braking performance. *Light scoring of the rotor surface not in* excess of 0.38 mm (0.15 inch) in depth is normal. This condition does not affect the brake operation.

LATERAL RUNOUT

Lateral runout is the movement of the rotor from side to side as it rotates on the spindle. This could also be referred to as "rotor wobble." This movement causes the brake pad and piston to be knocked back into the

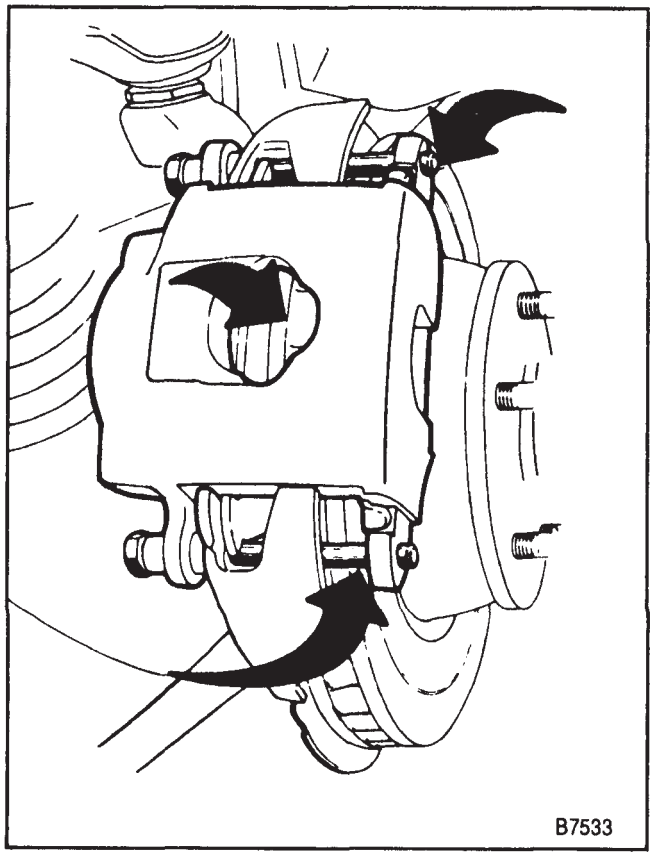

Figure 1—Lining Inspection Points

bore. This results in additional pedal travel and vibration during braking.

Checking Lateral Runout

1. Tighten the wheel bearings to eliminate all freeplay (2WD).
2. Attach a dial indicator to some portion of the suspension (figure 3).
   - The point of the stylus must contact the rotor face about 25 mm (1 inch) from the rotor edge.
3. Move the rotor one complete rotation.

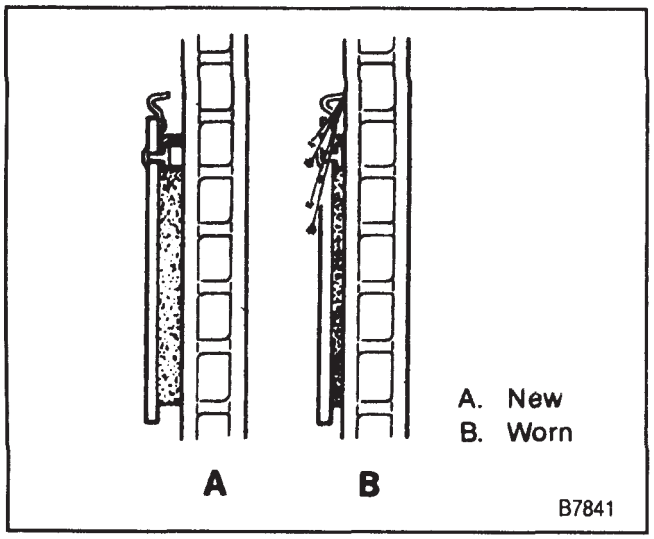

Figure 2—Wear Indicator

   - The lateral runout should not exceed 0.10 mm (0.004 inch).
4. Adjust the wheel bearings (2WD). Refer to SECTION 3C.

PARALLELISM

Parallelism is the measurement of rotor thickness at four or more points around the circumference of the rotor. All measurements must be made at the same distance in from the edge of the rotor. The rotor thickness must not vary more than 0.013 mm (0.0005 inch) from point to point.

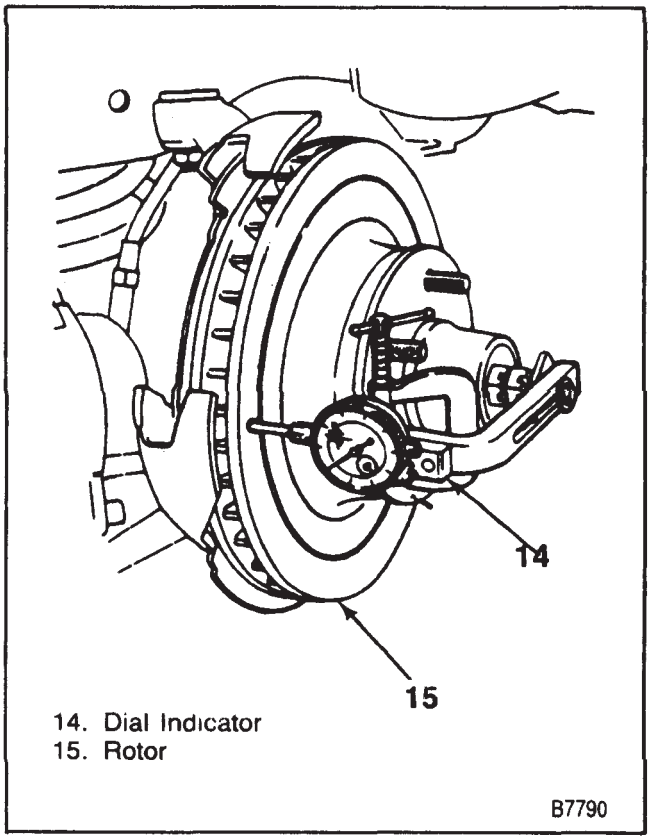

Figure 3—Checking for Lateral Runout

ON-VEHICLE SERVICE OF DISC BRAKES

LINING REPLACEMENT

Remove or Disconnect (Figure 4)

CAUTION: See "Caution" on page 5A2-1.

1. Two-thirds of the brake fluid from the master cylinder.
2. Raise the vehicle and support it with suitable safety stands.
3. Mark the relationship of the wheel to the hub.
4. Wheel and tire assembly. Refer to SECTION 3E.
5. Position a C-clamp around the outer pad and caliper.
   - Tighten until the piston bottoms in the bore (figure 5).
6. C-clamp.
7. Mounting bolts (figure 6).
8. Caliper assembly.
   - Suspend the caliper (figure 7).

NOTICE: Do not allow the brake components to hang from the flexible hoses. Damage to the hoses may occur.

9. Inboard pad (6).
10. Retainer spring (5).
11. Outboard pad (7).
12. Sleeves (2).
13. Bushings (3 and 4).

Inspect

- The inside of the caliper assembly for signs of fluid leakage. If found, refer to "Caliper" in "Unit Repair."

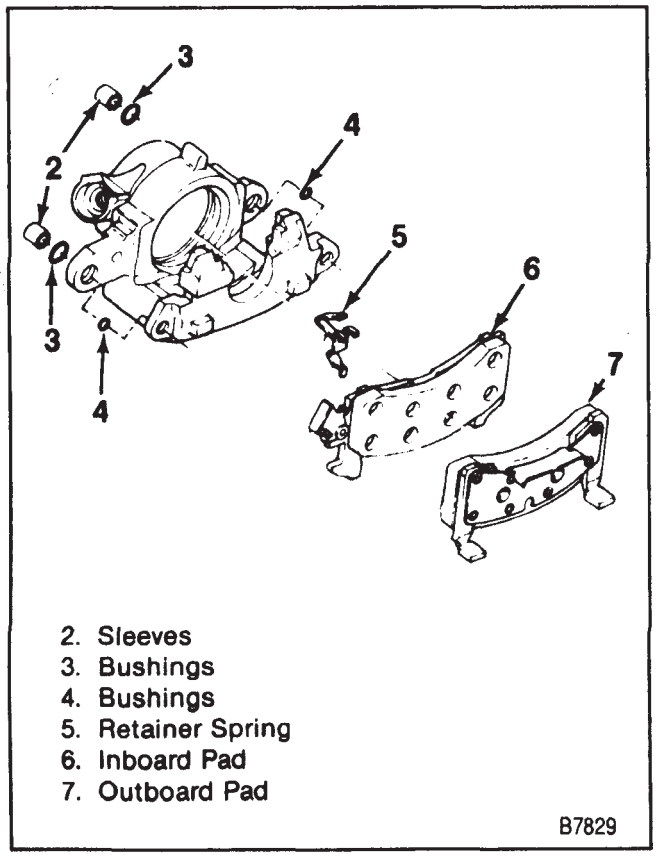

Figure 4—Disc Brake Linings

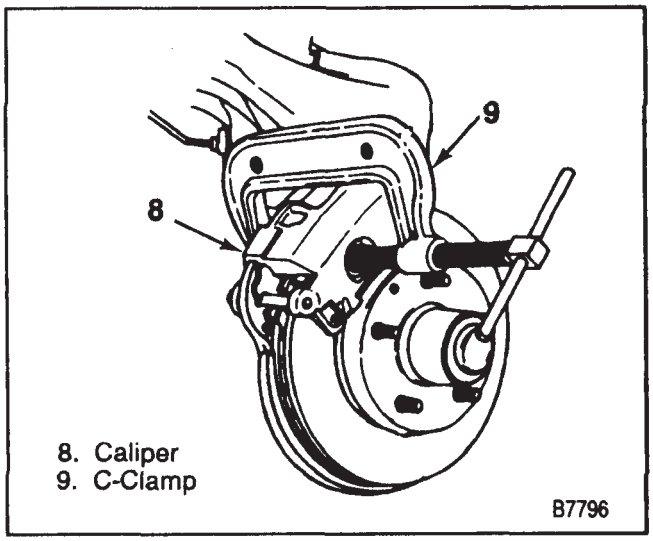

Figure 5—Compressing the Caliper Piston

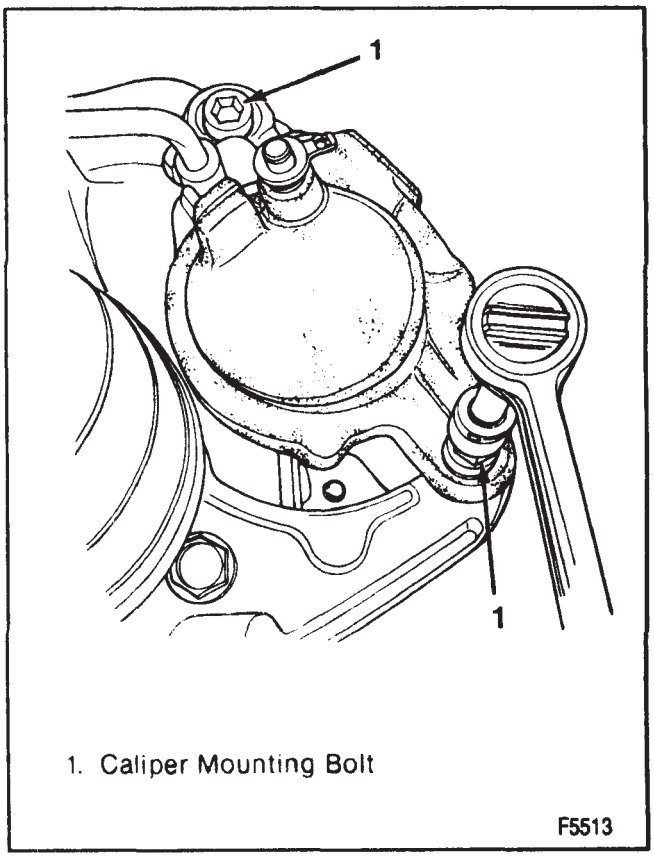

Figure 6—Removing the Mounting Bolts

- Mounting bolts and sleeves for corrosion. Do not attempt to polish away corrosion. Replace the corroded bolts and sleeves.

Install or Connect (Figure 4)

1. Lubricate the sleeves and bushings with Delco Silicone Lube (GM P/N 18010909) or equivalent.
2. Bushings (3 and 4).
3. Sleeves (2).
4. Outboard pad (7).
5. Retainer spring (5) to the inboard pad (6).
6. Inboard pad (6).
7. Caliper assembly.

NOTICE: Make sure the brake hose is not twisted or kinked since damage to the hose could result.

NOTICE: See "Notice" on page 5A2-1.

8. Mounting bolts (figure 6).

Tighten

- Bolts to 50 N.m (37 ft. lbs.).

9. Compress the pad ears to the caliper (figure 8).

Measure (Figure 9)

- The clearance between the caliper and steering knuckle.
- The clearance at each end of the caliper should be measured individually and added together.
- The total should be 0.26 to 0.60 mm (0.010 to 0.024 inches).

10. Wheel and tire assembly. Refer to SECTION 3E.
11. Remove the safety stands and lower the vehicle.

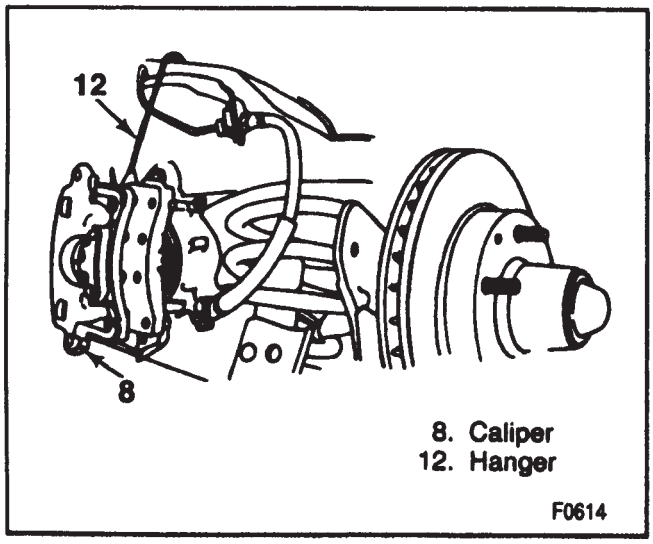

Figure 7—Suspending the Caliper

Important

- Before moving the vehicle, pump the brake pedal several times to make sure it is firm. Do not move the vehicle until a firm pedal is obtained.
- Check the brake fluid level in the master cylinder after pumping the brakes.

CALIPER REPLACEMENT

Remove or Disconnect

CAUTION: See "Caution" on page 5A2-1.

1. Two-thirds of the brake fluid from the master cylinder.
2. Raise the vehicle and support it with suitable safety stands.
3. Mark the relationship of the wheel to the hub.
4. Wheel and tire assembly. Refer to SECTION 3E.

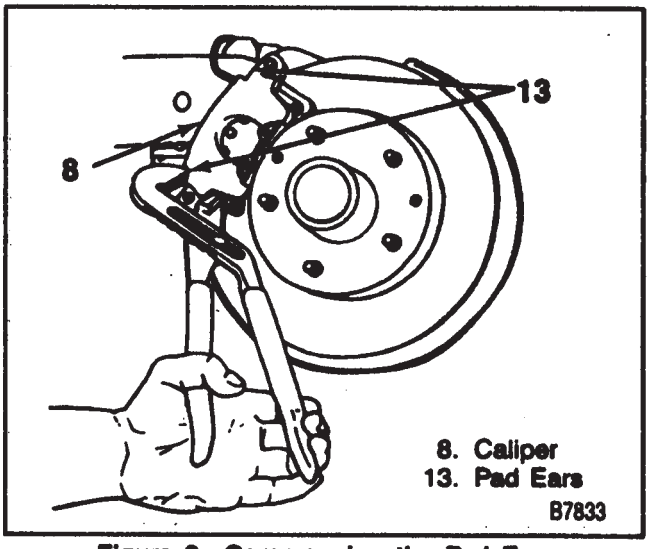

Figure 8—Compressing the Pad Ears

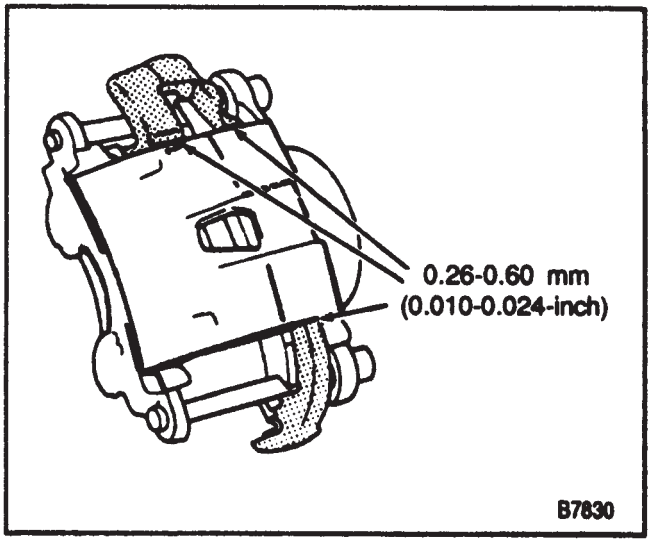

Figure 9—Caliper Clearances

5. Position a C-clamp around the outer pad and caliper.
   - Tighten until the piston bottoms in the bore (figure 5).
6. C-clamp.
7. Brake hose from the caliper (figure 10).
8. Mounting bolts (figure 6).
9. Caliper assembly.
10. Inboard pad (6).
    - Save the pad if it is reusable.
11. Outboard pad.
    - Save the pad if it is reusable.

Inspect

- Mounting bolts and sleeves for corrosion. Do not attempt to polish away corrosion. Replace the corroded bolts and sleeves.

Install or Connect (Figure 4)

NOTICE: For steps 7 and 9 see "Notice" on page 5A2-1.

1. Lubricate the sleeves and bushings with Delco Silicone Lube (GM P/N 18010909) or equivalent.
2. Bushings (3 and 4).
3. Sleeves (2).
4. Outboard pad (7).
5. Retainer spring (5) to the inboard pad (6) (if removed).
6. Inboard pad (6).
7. Caliper assembly.
8. Mounting bolts (figure 6).

Tighten

- Bolts to 50 N·m (37 ft. lbs.).

9. Compress the pad ears to the caliper (figure 8).
10. Brake hose to the caliper.

Tighten

- Bolt to 44 N·m (32 ft. lbs.).

NOTICE: Make sure the brake hose is not twisted or kinked since damage to the hose could result.

Measure (Figure 9)

- The clearance between the caliper and steering knuckle.
- The clearance at each end of the caliper should be measured individually and added together.
- The total should be between 0.26 to 0.60 mm (0.010 to 0.024 inches).

11. Wheel and tire assembly. Refer to SECTION 3E.
12. Remove the safety stands and lower the vehicle.

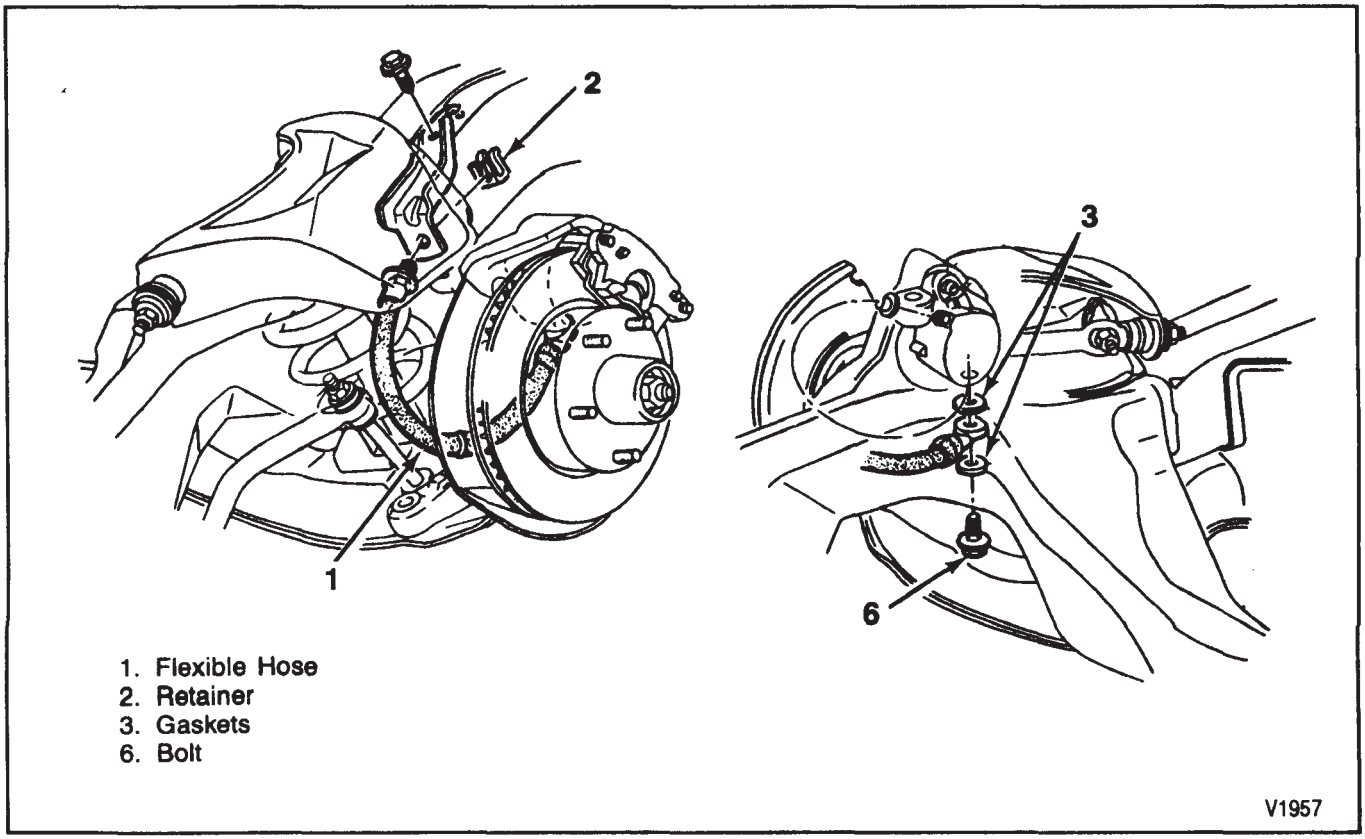

Figure 10—Front Brake Hoses

Important

- Before moving the vehicle, pump the brake pedal several times to make sure it is firm. Do not move the vehicle until a firm pedal is obtained. Check the brake fluid level in the master cylinder after pumping the brakes.

DRUM BRAKES

DESCRIPTION

The drum brake assembly is a duo-servo design. The force applied by the wheel cylinder to the primary shoe forces the leading edge of the shoe to contact the rotating drum. The shoe tries to rotate with the drum and transfers force to the secondary shoe through the star-wheel adjuster. The secondary shoe's leading edge "bites" into the drum and attempts to rotate, just as the primary shoe does. Since the shoes cannot rotate, they wedge themselves into the drum. The rotating torque increases the braking force applied to the shoes by the wheel cylinder. Because the shoes are used for this wedging action, the system is called duo-servo, as opposed to a single servo design where wheel cylinder pressure alone delivers the braking force.

The torque from the brake shoes is transferred through the backing plate to the axle flange. Brake adjustments are automatic and occur during reverse brake applications.

DIAGNOSIS OF DRUM BRAKES

DRUM INSPECTION

Anytime the brake drums are removed, they should be thoroughly cleaned and inspected for cracks, scores, deep grooves and out-of-round.

CRACKED, SCORED, OR GROOVED DRUM

A cracked drum is unsafe for further service and must be replaced. Do not try to weld a cracked drum.

Smooth up any slight scores with fine emery cloth. Heavy or extensive scoring causes excessive brake lining wear. The drum braking surface requires machining to remove these scores.

If the drum is grooved and the brake linings are slightly worn, the drum should not be machined. Instead, polish the drum braking surface with fine emery cloth. Eliminating all of the drum grooves and ridges on the lining would require removing too much metal and lining material. The grooves and ridges match and satisfactory service can be obtained by leaving them alone.

A grooved drum should be machined if the brake linings are being replaced. Using a grooved drum with new lining will cause excessive wear to the lining and make it difficult to obtain efficient brake performance.

OUT-OF-ROUND OR TAPERED DRUM

An out-of-round drum makes an accurate brake shoe adjustment impossible. This is likely to cause excessive wear to other parts of the brake mechanism due to the eccentric action of the drum. An out-of-round drum can also cause irregular tire tread wear and a pulsing brake pedal. When the braking surface of a drum exceeds the specification limits in taper and/or out-of-round, the drum should be machined to true up the braking surface. Out-of-round, taper, and wear can be accurately measured with an inside micrometer fitted with proper extension rods.

Measuring a drum for out-of-round, taper and wear involves taking measurements at the inner and outer edges of the braking surface at two or more places around the drum.

ON-VEHICLE SERVICE OF DRUM BRAKES

LINING REPLACEMENT

Remove or Disconnect (Figure 11)

CAUTION: See "Caution" on page 5A2-1.

1. Raise the vehicle and support it with suitable safety stands.
2. Mark the relationship of the wheel to the hub.
3. Wheel and tire assembly. Refer to SECTION 3E.
4. Mark the relationship of the drum to the axle.
5. Drum.
6. Return springs (9 and 10).
7. Shoe guide (5).
8. Hold down springs (11).
9. Hold down pins (1).
10. Actuator lever (7) and lever pivot (12).
11. Lever return spring (13).
12. Actuator link (8).
13. Parking brake strut (6) and strut spring (14).
14. Parking brake lever (3).
15. Shoes (17 and 4).

16. Adjusting screw assembly (15).
17. Adjusting screw spring (16).

Inspect

- All parts for discoloration due to heat or stress. Replace if necessary.
- All parts for signs of wear. Replace if necessary.
- Wheel cylinder for signs of leakage. Refer to "Wheel Cylinder Replacement."
- Brake drum for scoring and machining tolerance. Refer to "Drum Refinishing."

Install or Connect (Figure 11)

1. Lubricate the shoe pads and adjusting screw threads with a thin coat of white lithium grease or equivalent.
2. Adjusting screw assembly (15) and adjusting screw spring (16) to both shoes (17 and 4).
   - The coils of the adjusting screw spring must not touch the adjusting screw.

Important

- Do not interchange the right and left adjusting screws.

3. Shoe assembly to the backing plate.
4. Parking brake lever (3).
5. Strut spring (14) to the parking brake strut (6).
6. *Parking brake strut (6).*
7. Actuator lever (7) and lever pivot (12).
8. Actuator link (8).
9. Lever return spring (13).
10. Hold down pins (1).
11. Hold down springs (11).
12. Shoe guide (5).
13. *Return springs (9 and 10).*
14. Drum.
    - Align the marks made during disassembly.
15. Wheel and tire assembly. Refer to SECTION 3E.
    - Align the marks made during disassembly.
16. Adjust the brakes. Refer to "Adjustment."

BRAKE ADJUSTMENT

A manual adjustment of the rear brakes is required after replacing the rear linings. The front disc brakes require no adjustment.

CAUTION: Refer to "Caution" on page 5A2-1.

1. Remove the knockout area in the backing plate.
2. Turn the adjusting screws until the wheels can just be turned by hand.
   - The brake drag should be equal at both wheels.
3. Back off the adjusting screws 24 notches.

Important

- The brakes should have no drag after the screw has been backed off about 12 notches. If a heavy drag is present, refer to SECTION 5C.

4. Install an adjusting hole cover in the backing plate.
5. Check the parking brake adjustment. Refer to SECTION 5C.

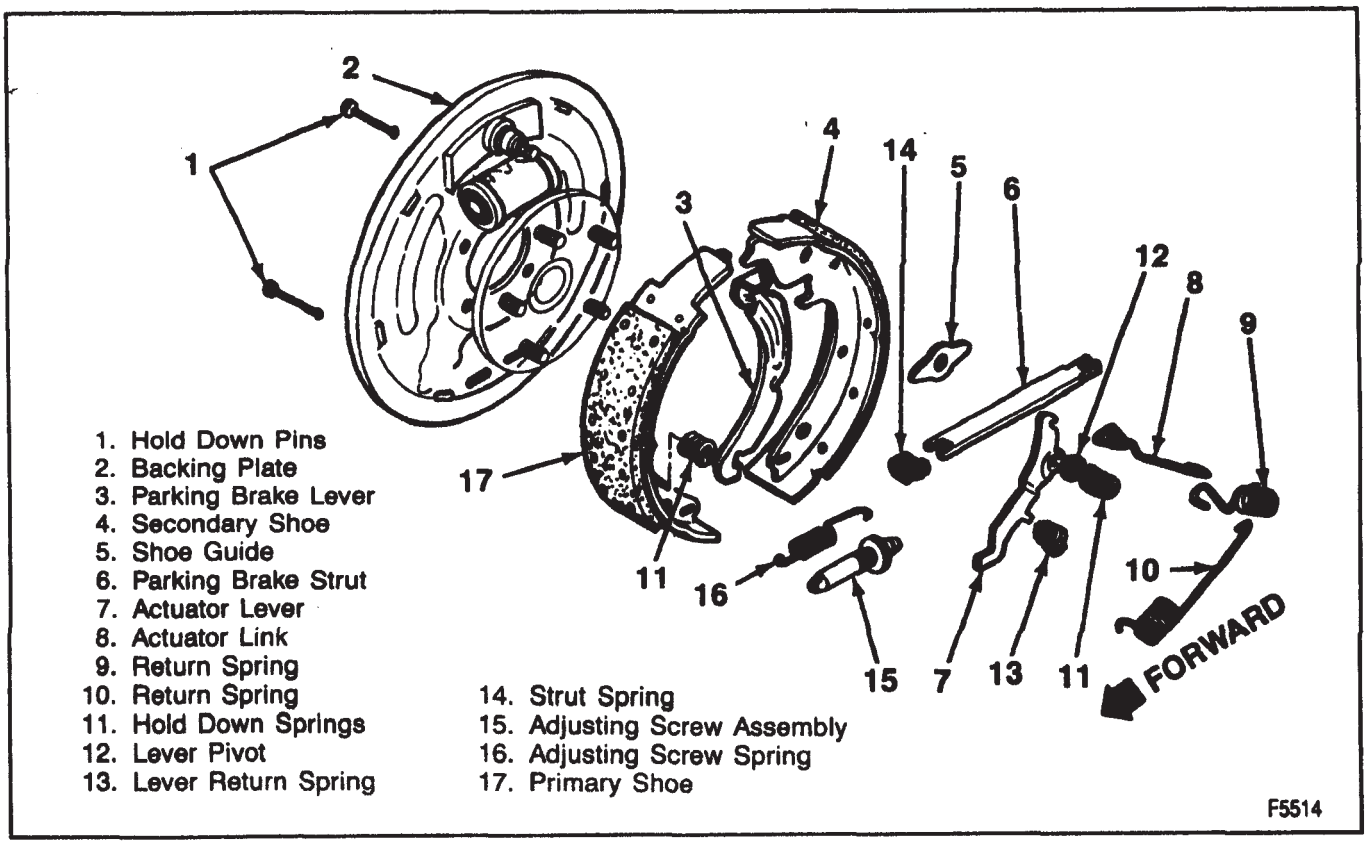

Figure 11—Drum Brake Components

WHEEL CYLINDER REPLACEMENT

Remove or Disconnect (Figure 12)

CAUTION: See "Caution" on page 5A2-1.

1. Brake linings. Refer to "Lining Replacement."
2. Brake pipe.
3. Bolts (49).
4. Wheel cylinder (50).

Install or Connect (Figure 12)

1. Wheel cylinder (50).

NOTICE: See "Notice" on page 5A2-1.

2. Bolts (49).

Tighten

- Bolts (49) to 9-16 N·m (110 in. lbs.).

3. Brake pipe.
4. Brake linings. Refer to "Lining Replacement."
5. Bleed the brake system. Refer to SECTION 5A.

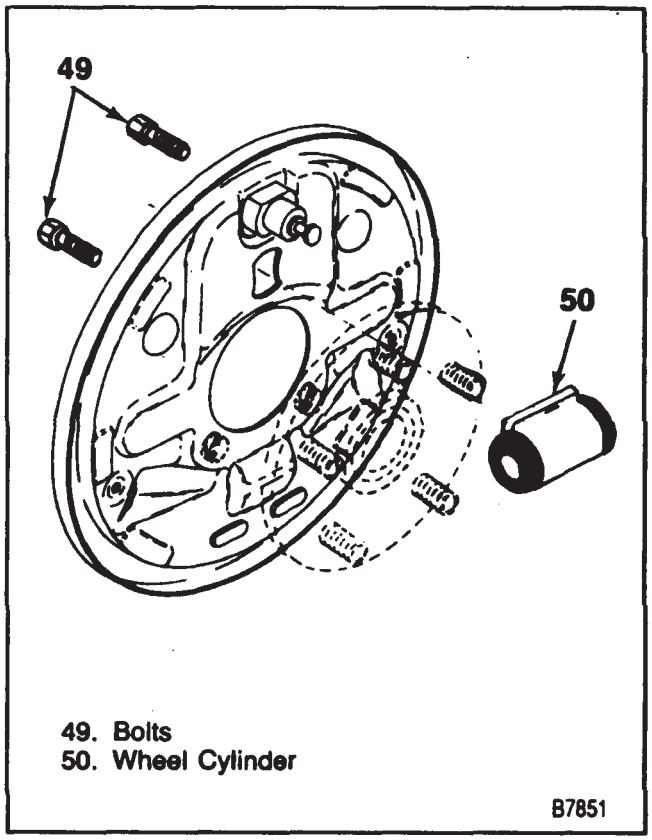

Figure 12—Removing the Wheel Cylinder

UNIT REPAIR

ROTOR REFINISHING

It is not always necessary to refinish the brake rotors during routine replacement of disc brake linings. The rotors should be refinished only if non-parallelism, runout, hard spots or deep scoring have occurred.

All brake rotors have a minimum thickness dimension cast into them. This dimension is the maximum wear dimension and not a refinish dimension. Do not use a brake rotor that will not meet the specifications after refinishing. A rotor that has been machined too thin will not have proper heat transfer capabilities. Replace it with a new brake rotor. Refer to "Specifications."

Accurate control of rotor tolerances is necessary for proper performance of the disc brakes. Rotor refinishing should only be done with precision equipment.

When refinishing rotors, always use sharp cutting tools or bits. Dull or worn tools leave a poor surface finish that affects initial braking performance. Vibration dampening attachments should always be used when refinishing braking surfaces. These attachments eliminate tool chatter and allow for a better surface finish.

When refinishing the rotor surface, the cutting speed will vary on each machine. If cutting information is unavailable, use the following as a guide:

The best speed for refinishing the rotor surfaces is a spindle speed of 150 rpm. Rough cutting crossfeed should range from 0.15 to 0.25 mm (0.006 to 0.010 inch) per revolution. Finish cuts should be made at a crossfeed no greater than 0.051 mm (0.002 inch) per revolution. The lathe finish cuts should be made non-directional by dressing the rotor surfaces with a sanding disc power tool (AMMCO Model 8350 Safe Swirl Disc Rotor Grinder or equivalent).

CALIPER

Remove or Disconnect (Figure 13)

1. Drain all fluid from the caliper.
2. Pad the interior of the caliper with clean shop towels.

CAUTION: Do not place your fingers in front of the piston in an attempt to catch or protect it when applying compressed air. This could result in serious injury.

NOTICE: Use just enough air to ease the piston out of the bore. If the piston is blown out, even with the padding provided, it may be damaged.

3. Piston (22) (figure 14).

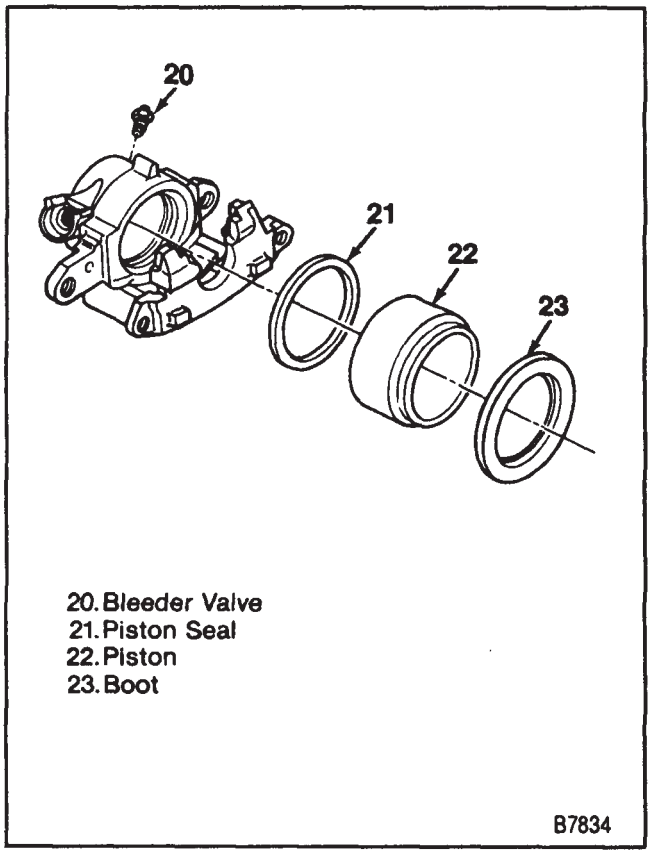

Figure 13—Caliper Components

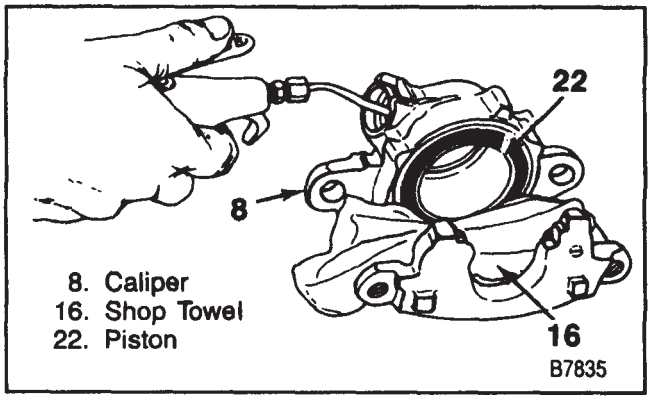

Figure 14—Removing the Caliper Piston

4. Boot (23) (figure 15).
   - Use care not to scratch the housing bore.
5. Piston seal (21).
   - Do not use any type of metal tool.
6. Bleeder valve (20).

Clean

- Bleeder valve, caliper bore, caliper passages, and piston with denatured alcohol. Use dry, filtered, compressed air to dry parts and blow out passages.

Inspect

- Piston for scoring, corrosion and any damage to the chrome plating. Replace if any of these are found.
- Caliper bore for scoring, pitting or corrosion. Use crocus cloth to polish out any light corrosion. Replace the caliper if the corrosion cannot be removed.

Install or Connect (Figure 13)

Tools Required:
J 26267 Piston Seal Installer

1. Lubricate the new piston seal, caliper bore, and piston with clean brake fluid.
2. Piston seal (21).
   - Make sure the seal is not twisted in the caliper bore groove.
3. Boot (23) on the piston (22).
4. Piston (22).

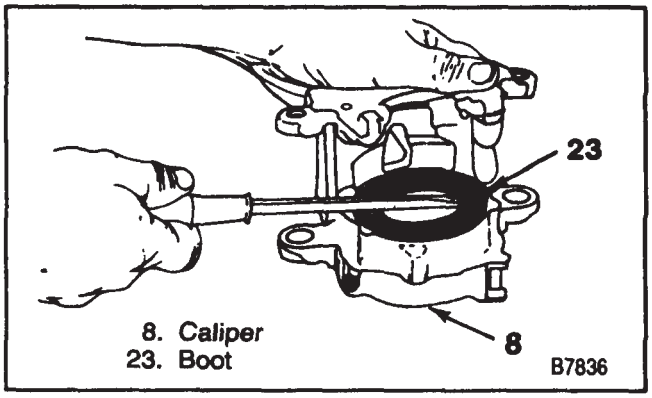

Figure 15—Removing the Caliper Boot

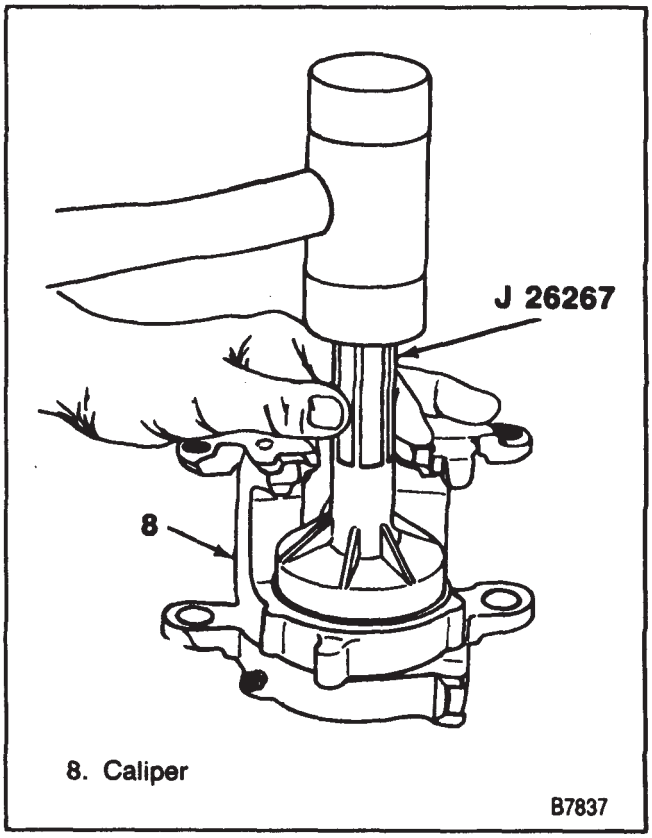

Figure 16—Installing the Caliper Boot

5. Boot (23) into the caliper housing counterbore using J 26267 (figure 16).
6. Bleeder valve (20).

DRUM REFINISHING

If a drum needs refinishing, remove only enough metal to obtain a true, smooth braking surface. Replace the drum if it does not clean up after being machined to the maximum refinish specification. Refer to "Specifications." Removal of too much metal affects heat dissipation and can cause distortion of the drum.

All brake drums have a maximum diameter cast into them. This is the maximum wear diameter allowed, not a refinish diameter. Do not use a brake drum that will not meet this specification.

WHEEL CYLINDER

Remove or Disconnect (Figure 17)

1. Wheel cylinder. Refer to "Wheel Cylinder Replacement."
2. Boots (54).
3. Pistons (53).
4. Seals (52).
5. Spring assembly (55).

Inspect

- Cylinder bore for scoring and corrosion.
- Spring assembly for signs of discoloration due to heat. Replace if necessary.

Clean

- Inside the cylinder bore with crocus cloth. If the bore is still scored, replace the cylinder.
- Cylinder with clean brake fluid.

Install or Connect (Figure 17)

1. Lubricate the seals and cylinder bore with clean brake fluid.

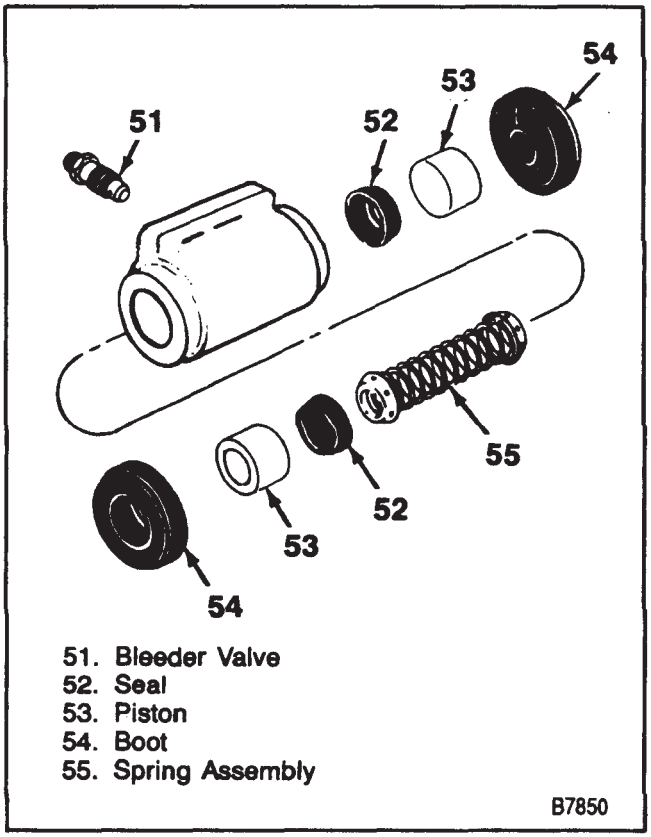

Figure 17—Wheel Cylinder Components

2. Spring assembly (55).
3. Seals (52).
4. Pistons (53).
5. Boots (54).
6. Wheel cylinder. Refer to "Wheel Cylinder Replacement."

SPECIFICATIONS

BRAKE SYSTEMS

SYSTEM	FRONT BRAKES	REAR BRAKES	BRAKE ASSIST
JM3	Disc 10.5 x 1.03	Drum 9.5 x 2	240mm Tandem Diaphragm
JM5	Disc 10.5 x 1.03	Drum 9.5 x 2	200mm Tandem Diaphragm
JM7	Disc 10.5 x 1.03	Drum 9.5 x 2	240mm Single Diaphragm

T2020

ROTOR THICKNESS

ORIGINAL	THINNEST (REFINISHING)	REPLACEMENT (DISCARD)
26.42mm (1.03 in.)	24.89mm (.980 in.)	24.51 mm (.965 in.)

T2022

DRUM DIAMETER

ORIGINAL	MAXIMUM FINISH	REPLACEMENT (DISCARD)
241.3 mm (9.50 in.)	242.82 mm (9.56 in.)	243.59 mm (9.59 in.)

T2072

FASTENER TIGHTENING SPECIFICATIONS

	N·m	Ft. Lbs.
Caliper Mount Bolt	50	37
Front Flex Hose Bolt	44	32
Steel Brake Pipe Fittings	22	16
Wheel Cylinder to Backing Plate Bolts	9-16	110*

*Inch Pounds

T2611

SPECIAL TOOLS

1 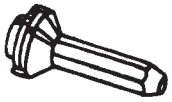 J 26267

1. Piston Seal Installer

F6551

SECTION 5C

PARKING BRAKE

CAUTION: When servicing brake parts, do not create dust by grinding or sanding brake linings or by cleaning wheel brake parts with a dry brush or compressed air. Many brake parts contain asbestos fibers which can become airborne if dust is created during servicing. Breathing dust containing asbestos fibers may cause serious bodily harm. A water dampened cloth or water based solution should be used to remove any dust on brake parts. Equipment is commercially available to perform this washing function. These wet methods will prevent asbestos fibers from becoming airborne.

NOTICE: When fasteners are removed, always reinstall them at the same location from which they were removed. If a fastener needs to be replaced, use the correct part number fastener for that application. If the correct part number fastener is not available, a fastener of equal size and strength (or stronger) may be used. Fasteners that are not reused, and those requiring thread locking compound will be called out. The correct torque value must be used when installing fasteners that require it. If the above conditions are not followed, parts or system damage could result.

CONTENTS

SUBJECT	PAGE
General Description	5C-1
On-Vehicle Service	5C-1
Pedal Replacement	5C-1
Cable Inspection	5C-2
Cable Replacement	5C-3
Adjustment	5C-3
Specifications	5C-4

GENERAL DESCRIPTION

The parking brake system consists of a ratchet type pedal assembly, a series of cables, and actuator levers.

This section covers parking brake component replacement and adjustment. The parking brake must be adjusted anytime the parking brake cables have been replaced or disconnected, or if the brake holding ability is inadequate.

The parking brake is not designed for use in place of the service brakes and should be applied only after the vehicle is brought to a complete stop, except in an emergency.

The "BRAKE" lamp will light when the pedal is applied. The "BRAKE" lamp is also used to indicate a malfunction in the antilock brake system. Applying the parking brake pedal also disables the "Daytime Running Lamps" and green indicator lamp on the dash (Canadian Only).

Before working on the parking brake system, make sure the service brakes are in good working order and adjusted properly.

ON-VEHICLE SERVICE

PEDAL REPLACEMENT

Remove or Disconnect (Figure 1)

1. Release the parking brake.
2. Lower dash panel. Refer to SECTION 10A4.
3. Parking brake cable from the clevis on the pedal assembly.
4. Loosen the parking brake cable at the equalizer (figure 3).
5. Cable from the parking brake assembly bracket.
   - Press in the retaining fingers.
6. Connector from the parking brake switch.

7. Release cable (5).
8. Screw (6) and handle (7).
9. Bolts (3), washers (4), and shield (2).
10. Pedal assembly (1).

Install or Connect (Figure 1)

NOTICE: See "Notice" on page 5C-1.

1. Pedal assembly (1).
2. Shield (2), washers (4), and bolts (3).

Tighten

- Bolts (3) to 14 N·m (124 in. lbs.).

3. Parking brake cable to the clevis.
4. Handle (7) and screw (6).
5. Release cable (5).
6. Connector to the parking brake switch.
7. Dash assembly. Refer to SECTION 10A4.

Adjust

- Parking brake pedal travel. Refer to "Adjustment."

CABLE INSPECTION

Check the parking brake system for free operation. The brake pedal must return to the released position without sticking or binding. If a problem is present, check the cable routings for kinks or binding. Clean and lubricate the parking brake assembly and cables with Delco brake lube or equivalent.

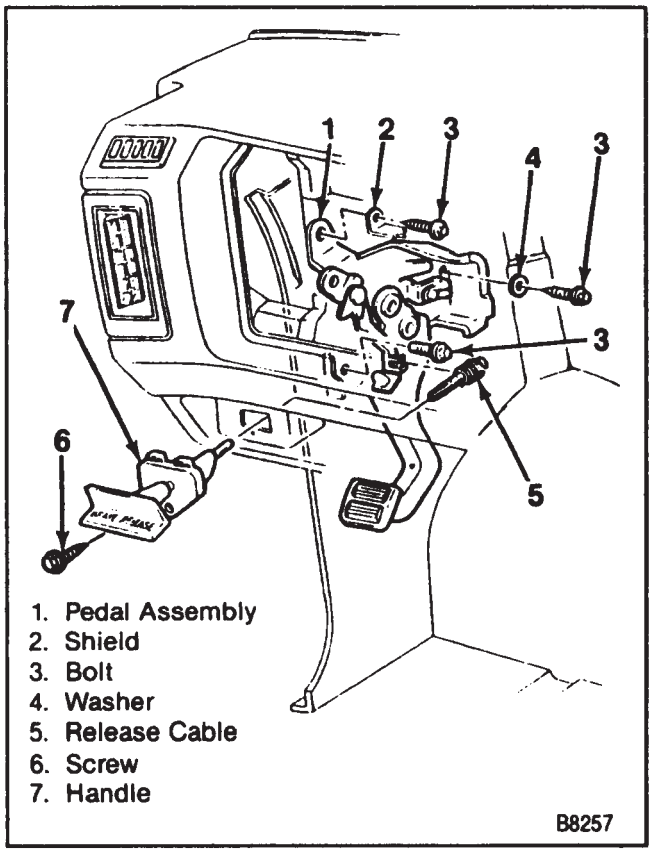

Figure 1—Parking Brake Components

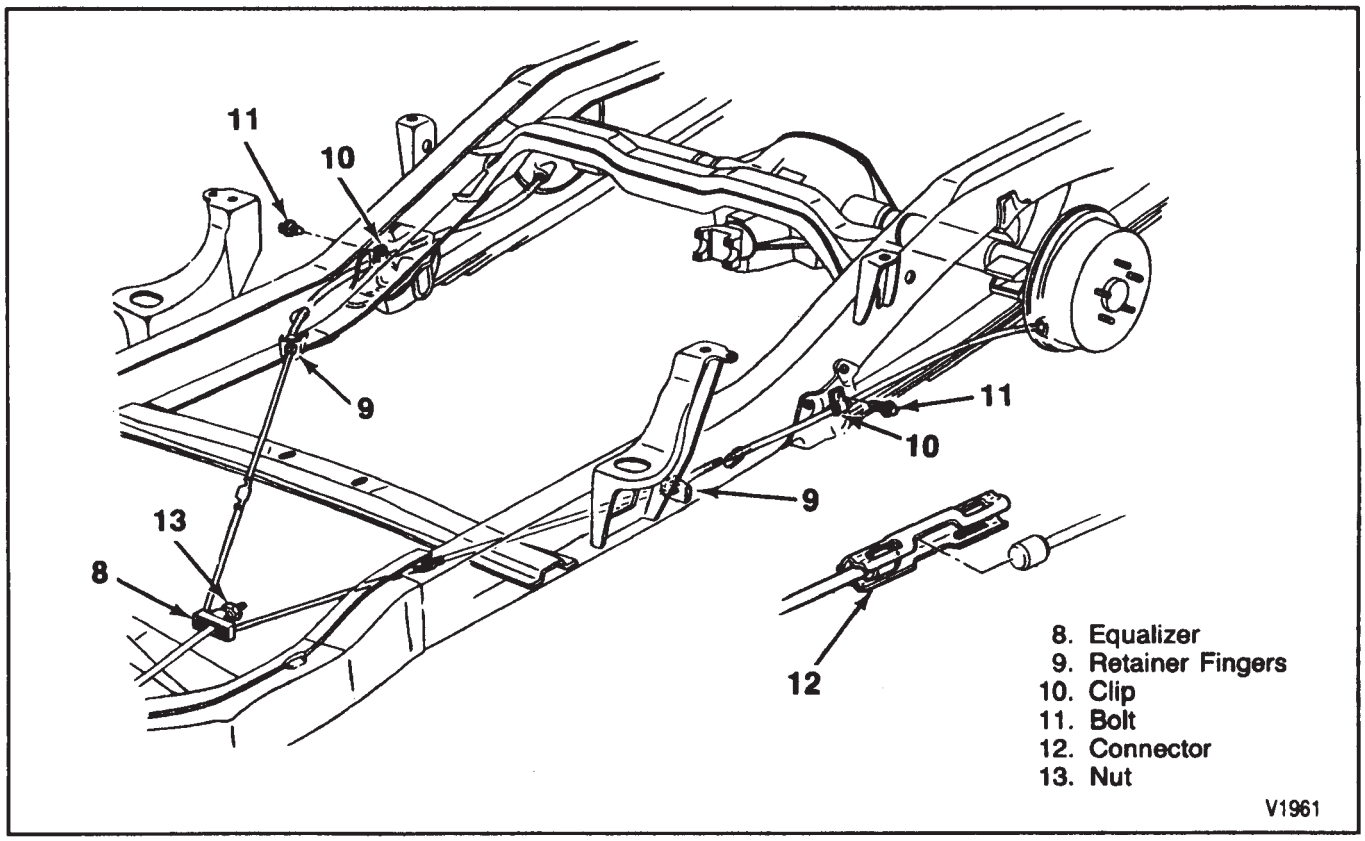

Figure 2—Rear Parking Brake Cable

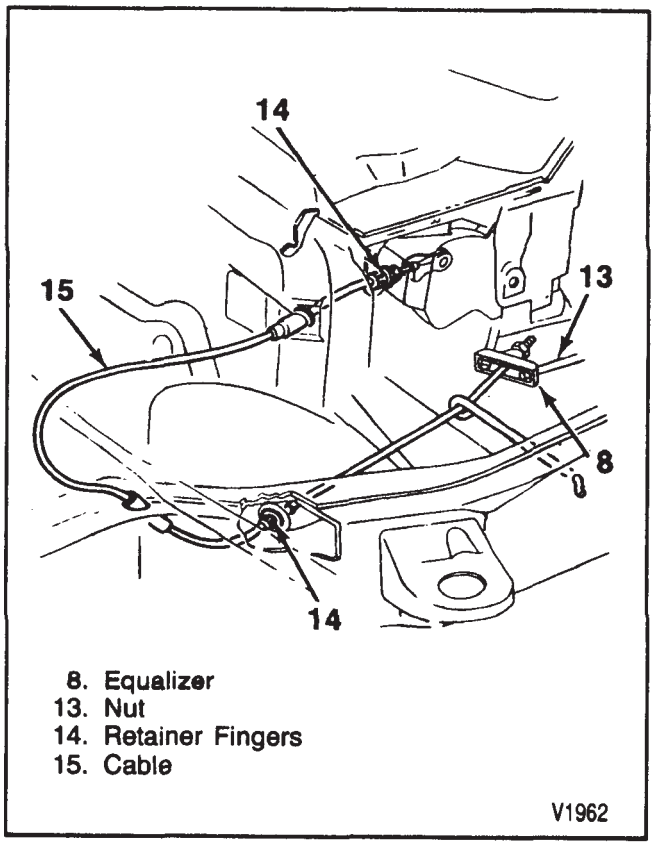

Figure 3—Front Cable Routing

CABLE REPLACEMENT

REAR CABLE REPLACEMENT

Remove or Disconnect (Figure 2)

1. Raise the vehicle and support it with suitable safety stands.
2. Loosen nut (13).
3. Connector (12).
4. Brake drum and shoe assembly. Refer to SECTION 5A2.
5. Bend in the cable retaining fingers at the backing plate.
6. Bend in the cable retaining fingers (9) at the frame bracket.
7. Bolt (11) and clip (10).
8. Cable.

Install or Connect (Figure 2)

1. Cable assembly into the backing plate and frame bracket.
   - All the retaining fingers must be completely through the backing plate and frame bracket.
2. Brake shoes and drum assembly. Refer to SECTION 5A2.
3. Clip (10) and bolt (11).
4. Connector (12).

Adjust

- Parking brake pedal travel. Refer to "Adjustment".

5. Remove the safety stands and lower the vehicle.

FRONT CABLE REPLACEMENT

Remove or Disconnect (Figure 3)

1. Raise the vehicle and support it with suitable safety stands.
2. Nut (13) at the equalizer (8).
3. Bend the retaining fingers (14).
4. Remove the dash trim panels to gain access to the brake pedal. Refer to SECTION 10A4.
5. Cable from the parking brake pedal assembly.
6. Cable (15).

Install or Connect (Figure 3)

- Attach a piece of wire to the cable to aid in installation.

1. Cable (15).
   - All the retaining fingers (14) must be completely through the holes.
2. Cable to the parking brake pedal assembly.
3. Equalizer (8) and nut (13).

Adjust

- Parking brake pedal travel. Refer to "Adjustment."

4. Remove the safety stands and lower the vehicle.

ADJUSTMENT

The parking brake must be adjusted anytime the parking brake cables have been replaced or disconnected, or if under heavy foot pressure the pedal travel is less than 9 ratchet clicks or greater than 13 clicks.

Before adjusting the parking brake, check the condition of the service brakes. Refer to SECTION 5A2. The service brakes must be adjusted properly before proceeding with the parking brake adjustment.

1. Block the front wheels.
2. Raise and support the rear axle with suitable safety stands.
3. Loosen the equalizer nut.
4. Set the parking brake pedal to the specified number of clicks:
   - 2 wheel drive models—two clicks.
   - 4 wheel drive models—three clicks.

Adjust

5. Tighten the equalizer nut until the rear wheels will not rotate without excessive force in a forward direction.
6. Loosen the equalizer nut until there is moderate drag when the rear wheels are rotated in a forward direction.
7. Release the parking brake and rotate the rear wheels.
   - There should be no brake drag in either direction.
8. Remove the safety stands and lower the vehicle.
9. Unblock the front wheels.

SPECIFICATIONS

FASTENER TIGHTENING SPECIFICATIONS

Item	N·m	In. Lbs.
Parking Brake Pedal Mounting Bolt	14	124

T2597

SECTION 5E1

FOUR WHEEL ANTILOCK BRAKE SYSTEM

CAUTION: When servicing wheel brake parts, do not create dust by grinding or sanding brake linings or by cleaning wheel brake parts with a dry brush or compressed air. A water dampened cloth should be used. Many wheel brake parts contain asbestos fibers which can become airborne if dust is created during servicing. Breathing dust containing asbestos fibers may cause serious bodily harm.

NOTICE: When fasteners are removed, always reinstall them at the same location from which they were removed. If a fastener needs to be replaced, use the correct part number fastener for that application. If the correct part number fastener is not available, a fastener of equal size and strength (or stronger) may be used. Fasteners that are not reused and those requiring thread locking compound will be called out. The correct torque value must be used when installing fasteners that require it. If the above conditions are not followed, parts or system damage could result.

CONTENTS

SUBJECT	PAGE
General Description	5E1- 2
Trouble Code Identification	5E1- 2
Clearing Trouble codes	5E1- 2
Four Wheel Antilock Brake System Component Locations	5E1- 3
Wiring Diagram (2WD)	5E1- 4
Diagnostic Circuit Test (2WD)	5E1- 5
Wiring Diagram (4WD)	5E1- 6
Diagnostic Circuit Test (4WD)	5E1- 7
Code 21—Right Front Speed Sensor or Circuit Open	5E1-10
Code 22—Missing Right Front Speed Signal	5E1-11
Code 23—Erratic Right Front Speed Sensor	5E1-12
Code 25—Left Front Speed Sensor or Circuit Open	5E1-10
Code 26—Missing Left Front Speed Signal	5E1-11
Code 27—Erratic Left Front Speed Sensor	5E1-12
Code 28—Erratic Speed Sensor Signal	5E1-13
Code 29—Simultaneous Drop-Out Of All Four Sensors	5E1-14
Code 31—Right Rear Speed Sensor or Circuit Open	5E1-10
Code 32—Missing Right Rear Speed Signal	5E1-11
Code 33—Erratic Right Rear Speed Sensor	5E1-12
Code 35—Left Rear Speed Sensor or Circuit Open	5E1-10
Code 36—Missing Left Rear Speed Signal	5E1-11
Code 37—Erratic Left Rear Speed Sensor	5E1-12
Code 38—Wheel Speed Sensor Error	5E1-14
Codes 41 Through 54—Control Valves	5E1-15
Codes 61, 62, or 63—Reset Switches	5E1-16
Codes 65 and 66—Open or Shorted Motor Relay	5E1-17
Code 67—Open Motor Circuit or Shorted EHCU Output	5E1-18
Code 68—Locked Motor or Shorted Motor Circuit	5E1-18
Codes 71 Through 74—Memory Errors	5E1-19
Code 81—Brake Switch Circuit Shorted or Open	5E1-20
Code 86—Shorted Antilock Warning Lamp	5E1-21
Code 88—Shorted Brake Warning Lamp	5E1-21
Brake Pedal Pulses—No Code Condition	5E1-22
Wheel Pull During Hard Braking—No Code Condition	5E1-23
On-Vehicle Service	5E1-23
Wiring and Connector Repair	5E1-23

CONTENTS (cont'd)

SUBJECT	PAGE
EHCU Module Replacement	5E1-23
Front Wheel Speed Sensor Replacement	5E1-24
Rear Wheel Speed Sensor Replacement	5E1-27
Bleeding the EHCU Module	5E1-27
Specifications	5E1-29
Special Tools	5E1-29

GENERAL DESCRIPTION

This section covers the diagnostic and service information for the four wheel antilock brake system. For service information on all other components of the brake system, refer to SECTIONS 5A, 5A1, 5A2, or 5C.

The four wheel antilock system (4WAL) is designed to reduce the occurrence of wheel lockup during severe brake applications. The system does this by regulating hydraulic brake line pressure. The pressure is regulated by an electro-hydraulic control unit (EHCU) module located on the left fender (figure 1). The module contains two types of valves. Isolation valves maintain pressure to each front wheel separately and the rear wheels combined. Dump valves relieve the pressure from each front wheel separately and the rear wheels combined. These valves are controlled by a microprocessor in the EHCU module. During a severe brake application, the EHCU module permits the valves to do one of three functions or a combination of all three. The EHCU module allows the valves to either maintain the same hydraulic pressure, relieve hydraulic pressure, or increase hydraulic pressure.

The EHCU module receives input signals from speed sensors located at each wheel and the brake lamp switch. The speed sensors are connected directly to the EHCU module through the eight pin connector.

The 4WAL system includes an "ANTILOCK" warning lamp in the instrument panel. This lamp serves as an indication of 4WAL system operation and malfunctions. A bulb check is done each time the ignition switch is turned to the "ON" position. The warning lamp should light and remain on for about two seconds. The warning lamp also indicates 4WAL system malfunctions. To determine the specific cause of the malfunction, refer to "Diagnostic Circuit Check."

TROUBLE CODE IDENTIFICATION

Trouble codes can be read with the TECH 1 scanner or by jumping terminal "H" to terminal "A" of the assembly line diagnostic link (ALDL) and counting the "ANTILOCK" warning light flashes. The terminals must be jumped for a few seconds before the code will begin to flash. The "ANTILOCK" light displays codes similar to the "SERVICE ENGINE SOON" light for the fuel and emissions system. Refer to figures 1 through 22 for specific diagnostic information.

CLEARING TROUBLE CODES

If the antilock warning light is staying lit, the codes may be cleared with the Tech I scanner or by doing the following procedure. (An engine remote starter can be used in place of the jumper wire for this procedure).

1. Turn the ignition switch to the "ON" position.
2. Use a jumper wire to ground ALDL terminal "H" to "A" for two seconds.
3. Remove the jumper wire for one second.
4. Repeat the grounding for two seconds.
5. An indication of success is when both the "ANTILOCK" and "BRAKE" lamps light and then turn off.

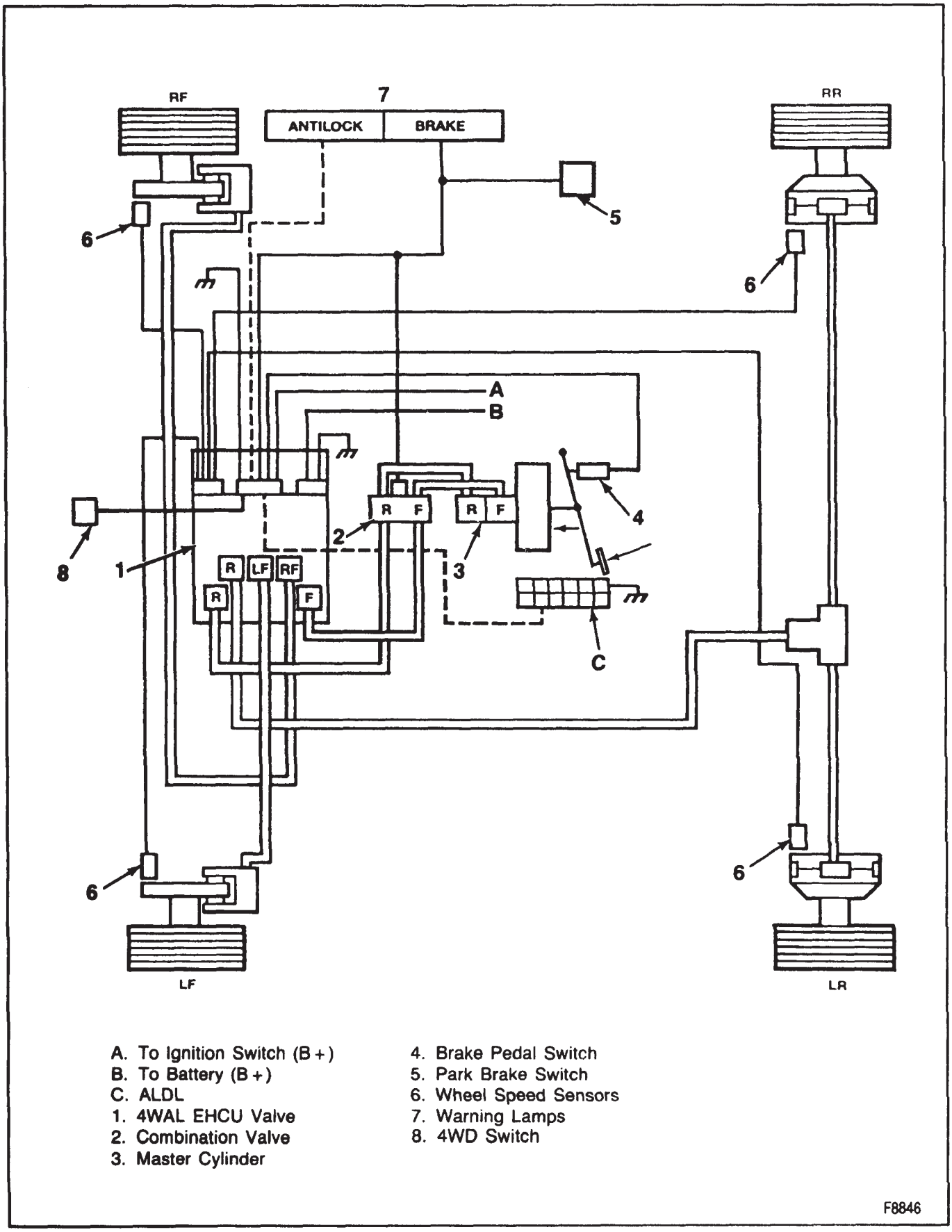

Figure 1—Four Wheel Antilock Brake System

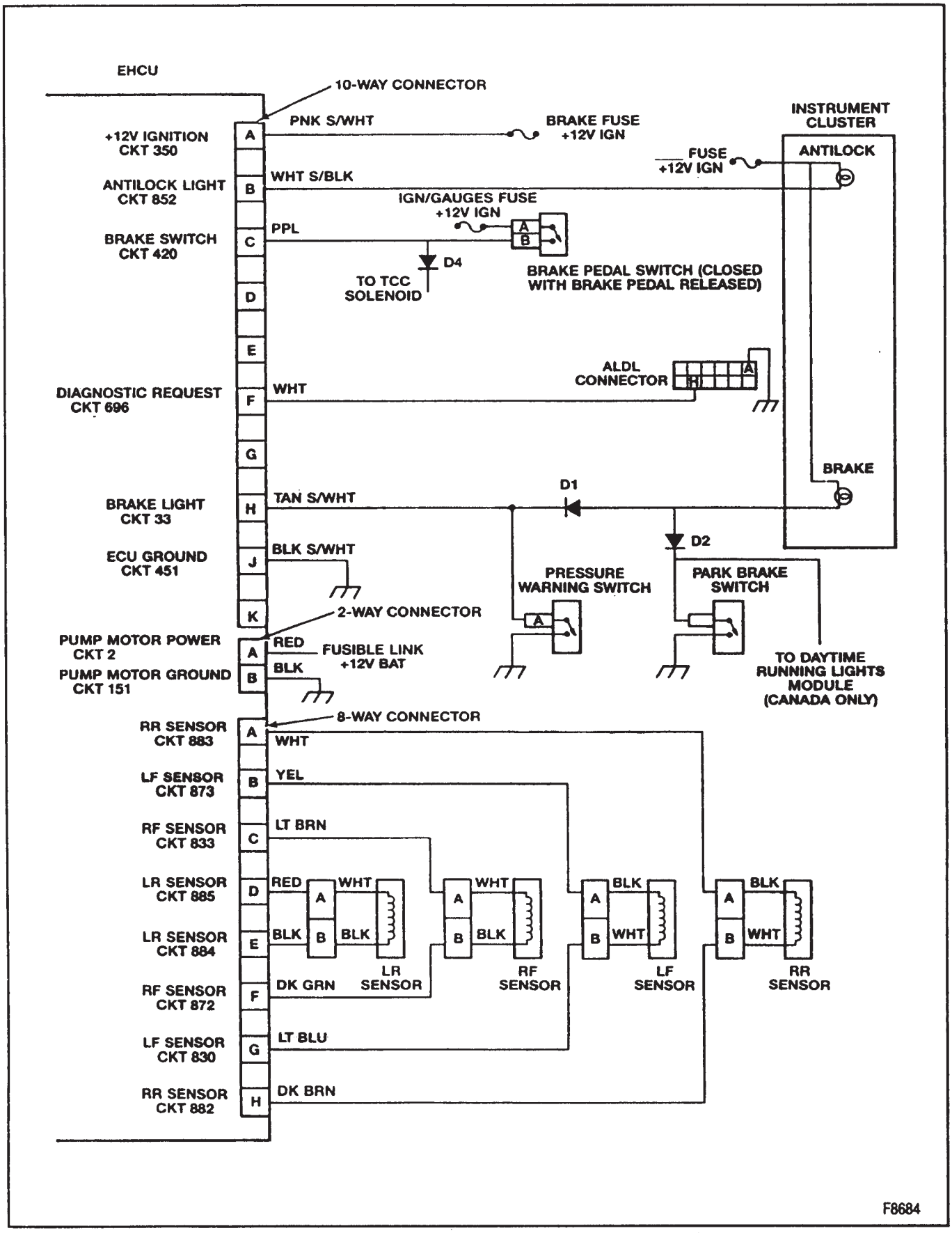

Figure 2—Four Wheel Antilock Wiring Diagram (2WD)

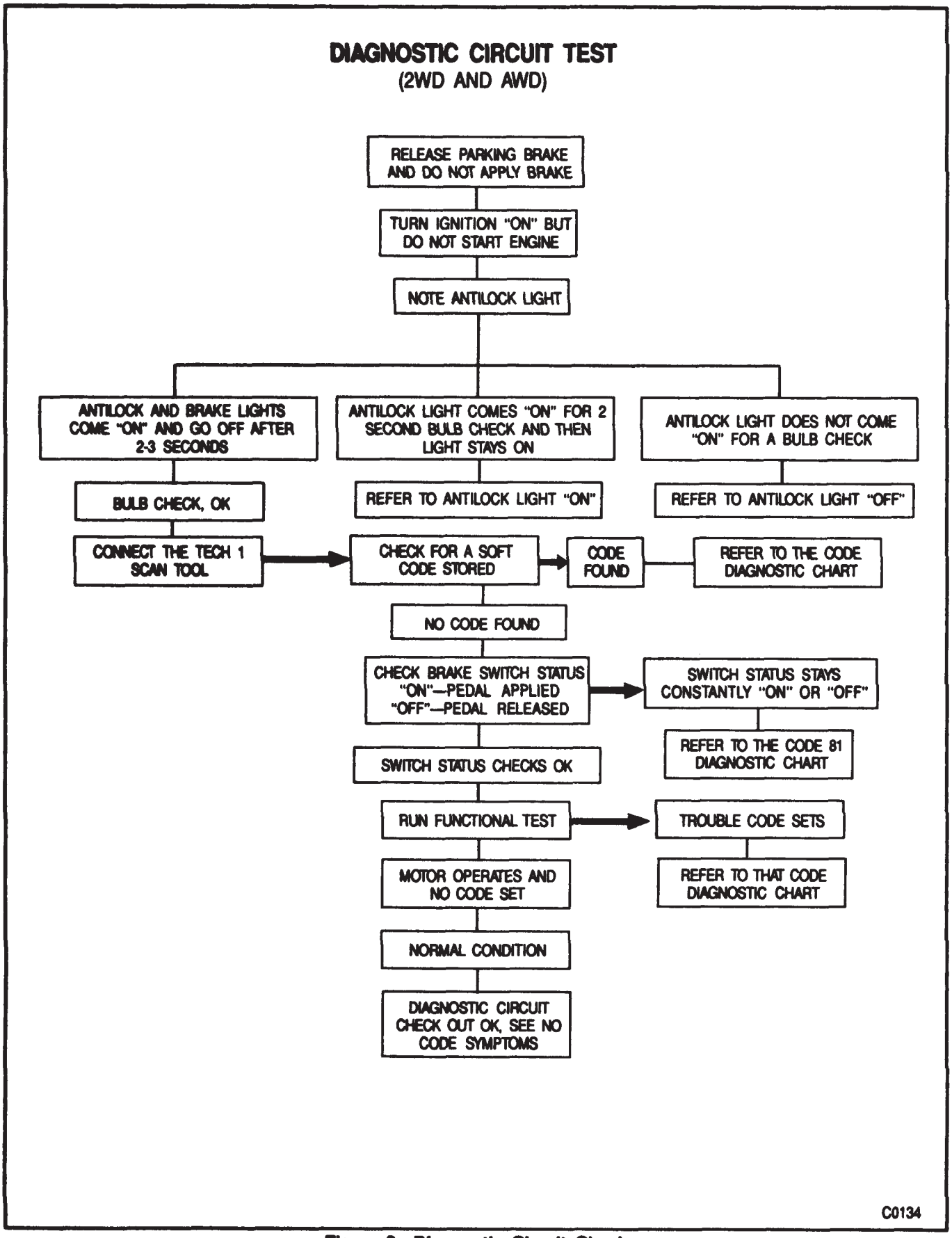

Figure 3—Diagnostic Circuit Check

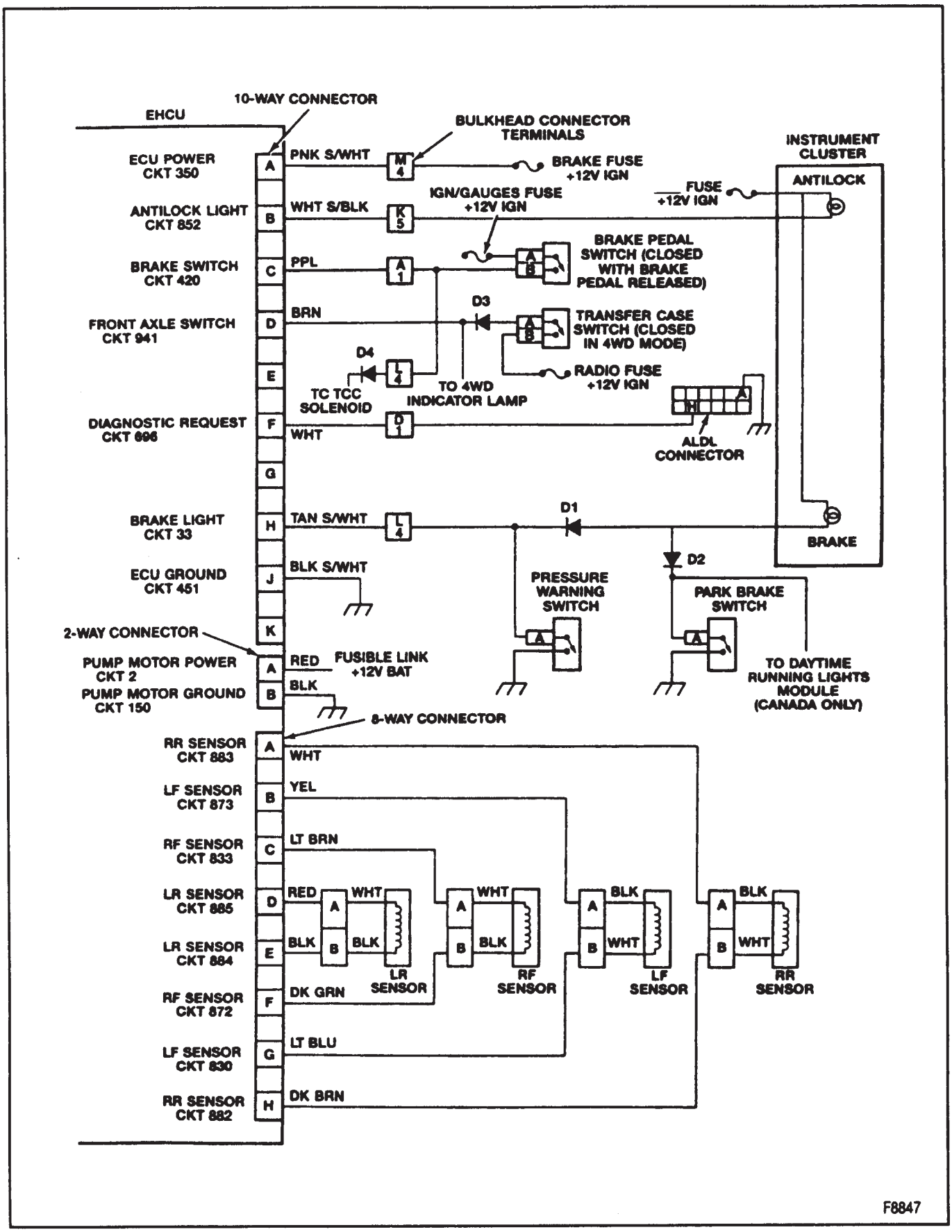

Figure 4—Four Wheel Antilock Wiring Diagram (4WD)

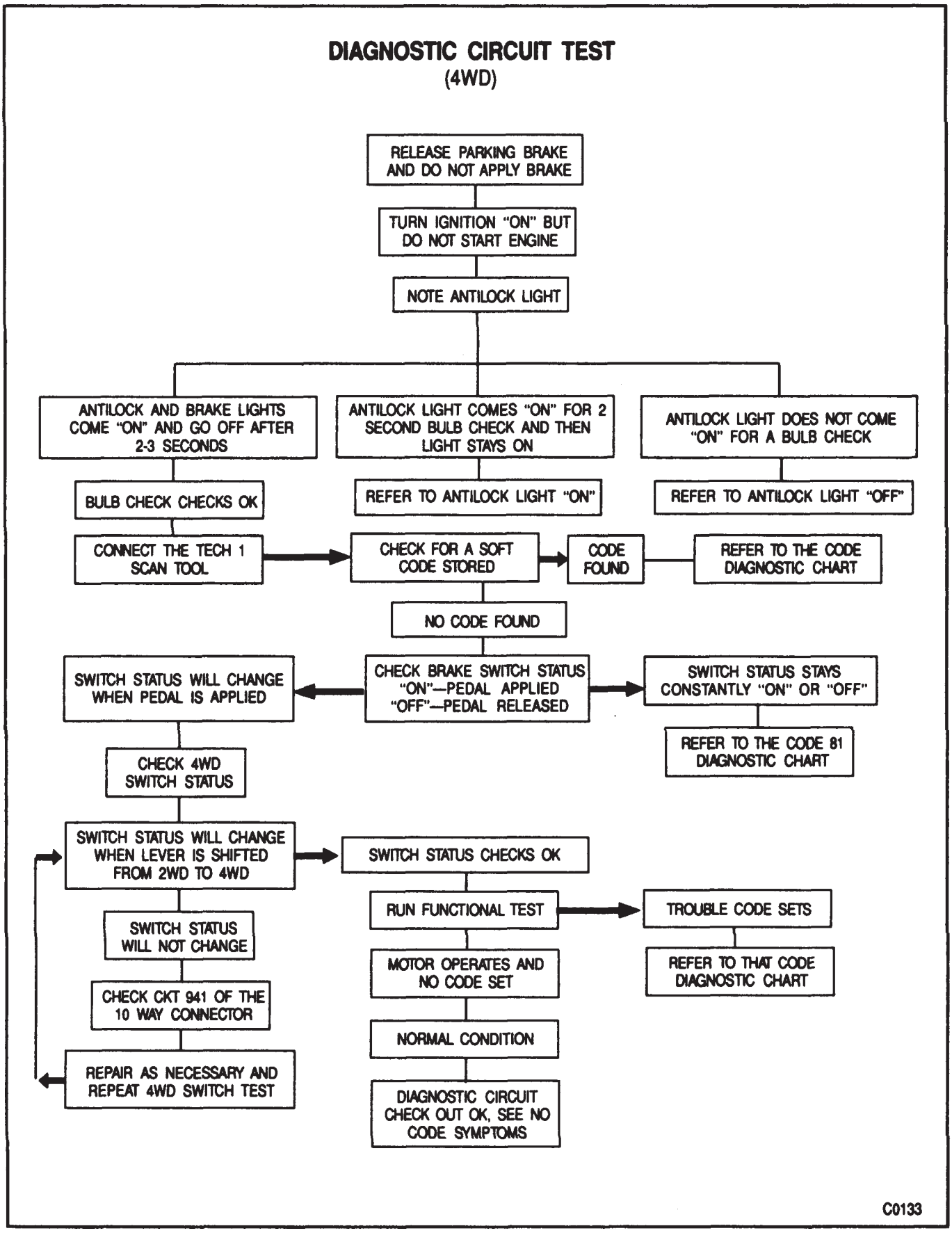

Figure 5—Diagnostic Circuit Check

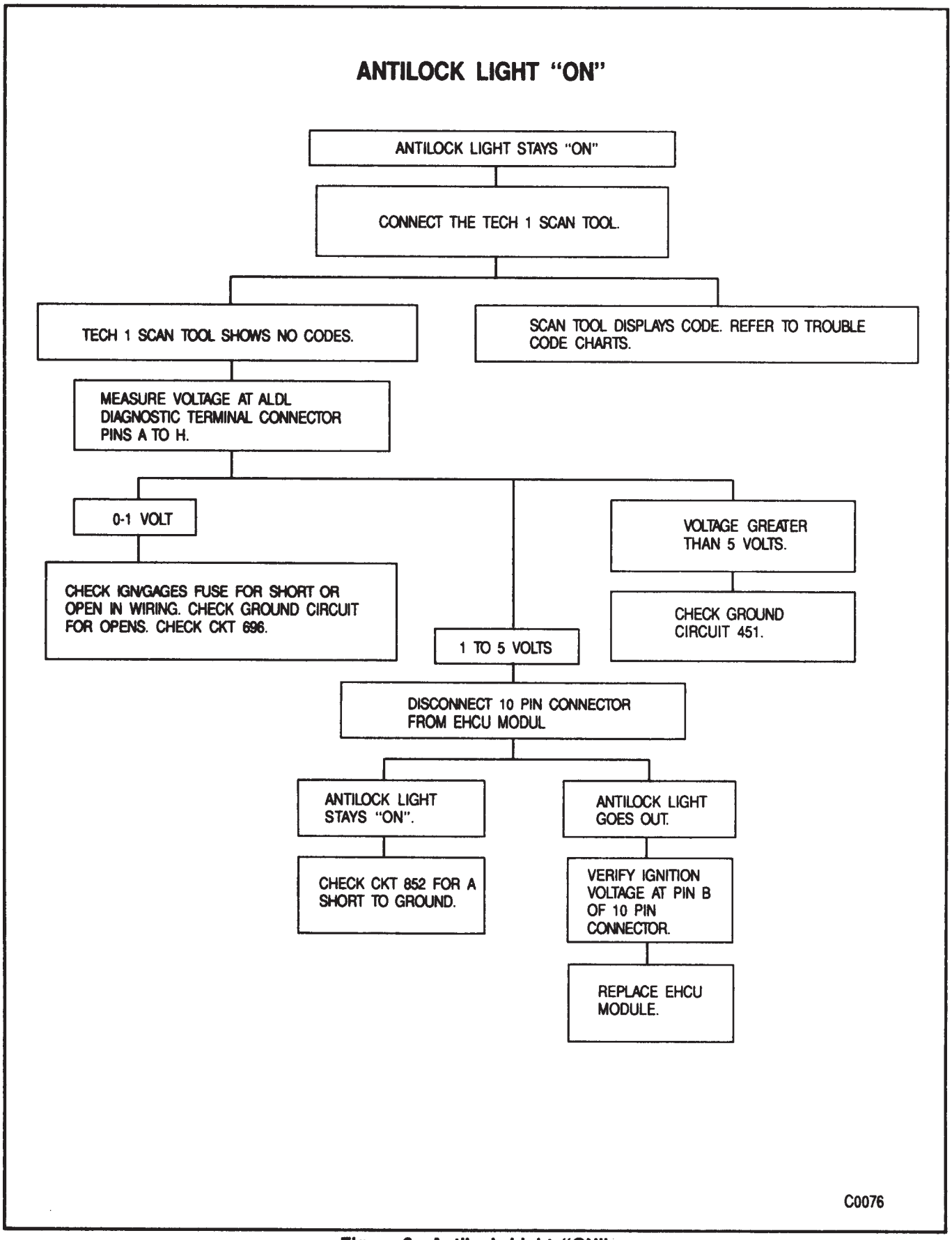

Figure 6—Antilock Light "ON"

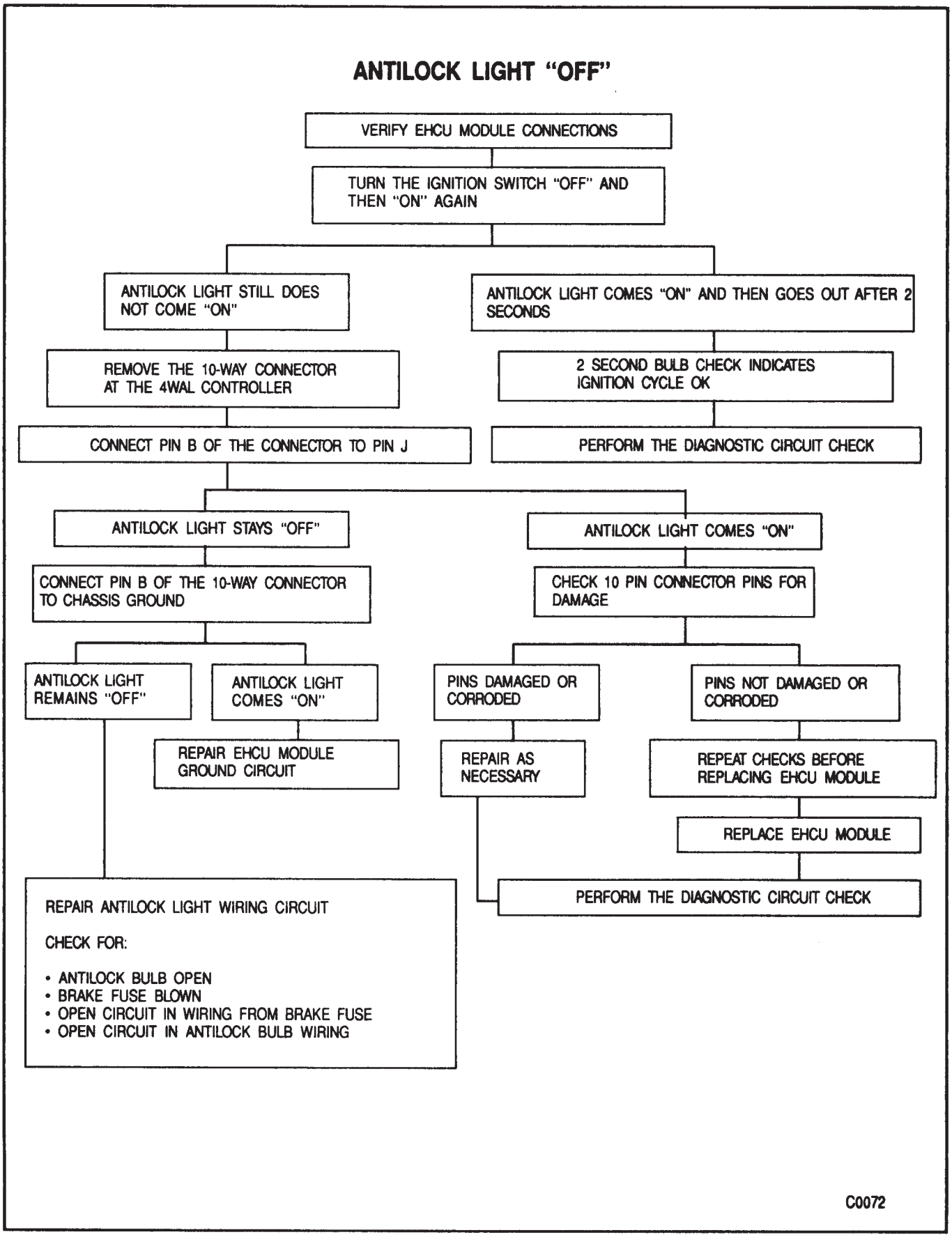

Figure 7—Antilock Light "OFF"

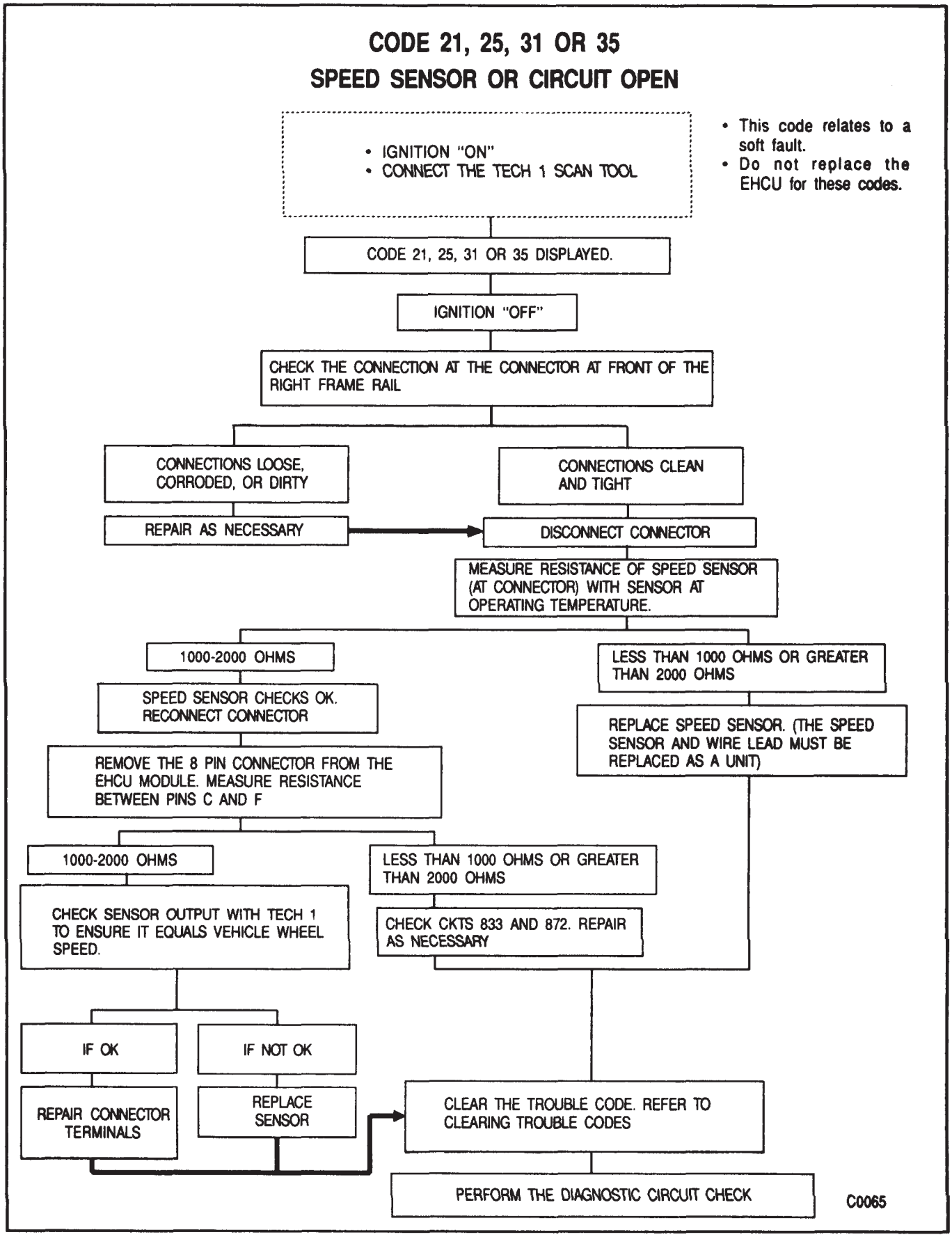

Figure 8—Code 21, 25, 31 or 35

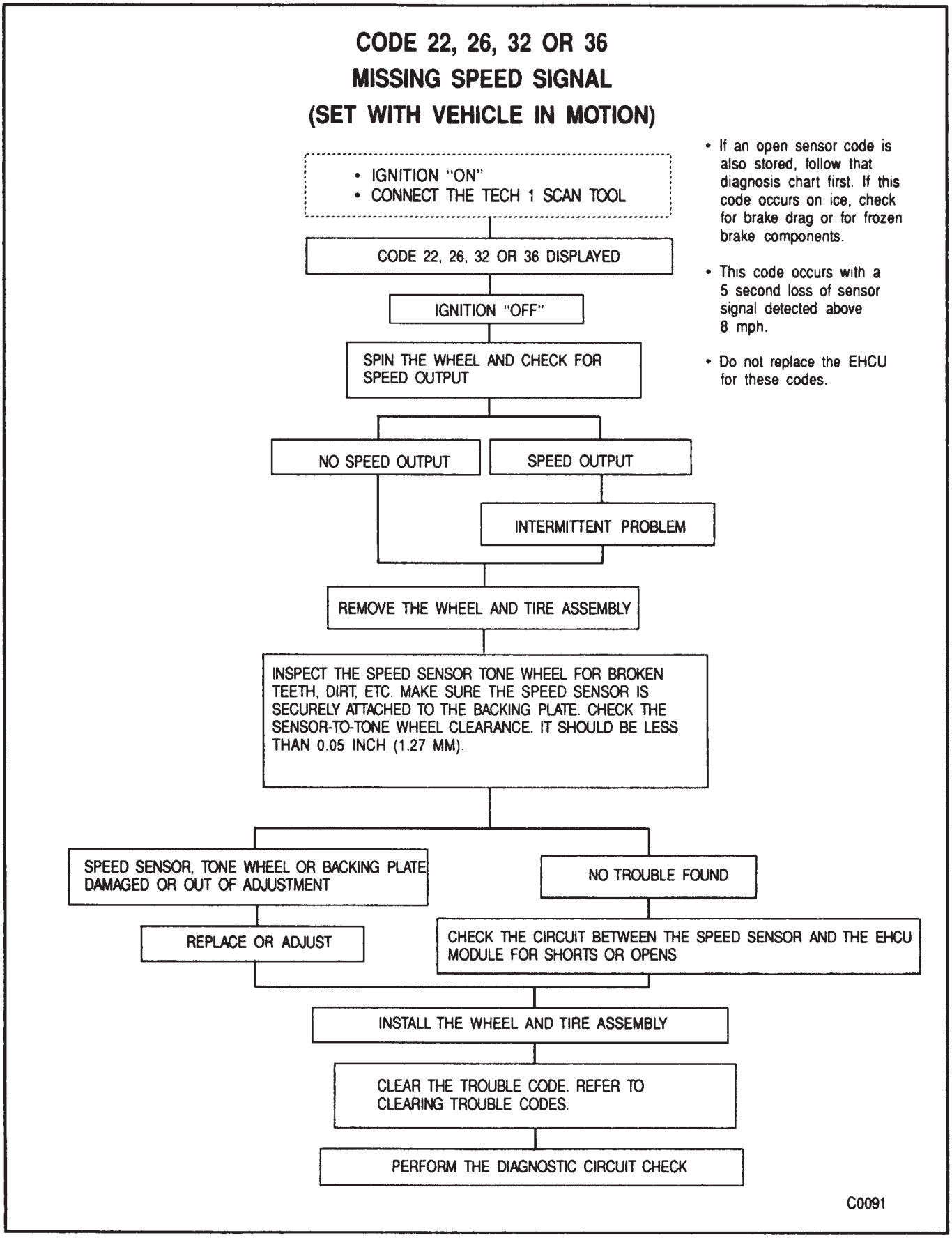

Figure 9—Code 22, 26, 32 or 36

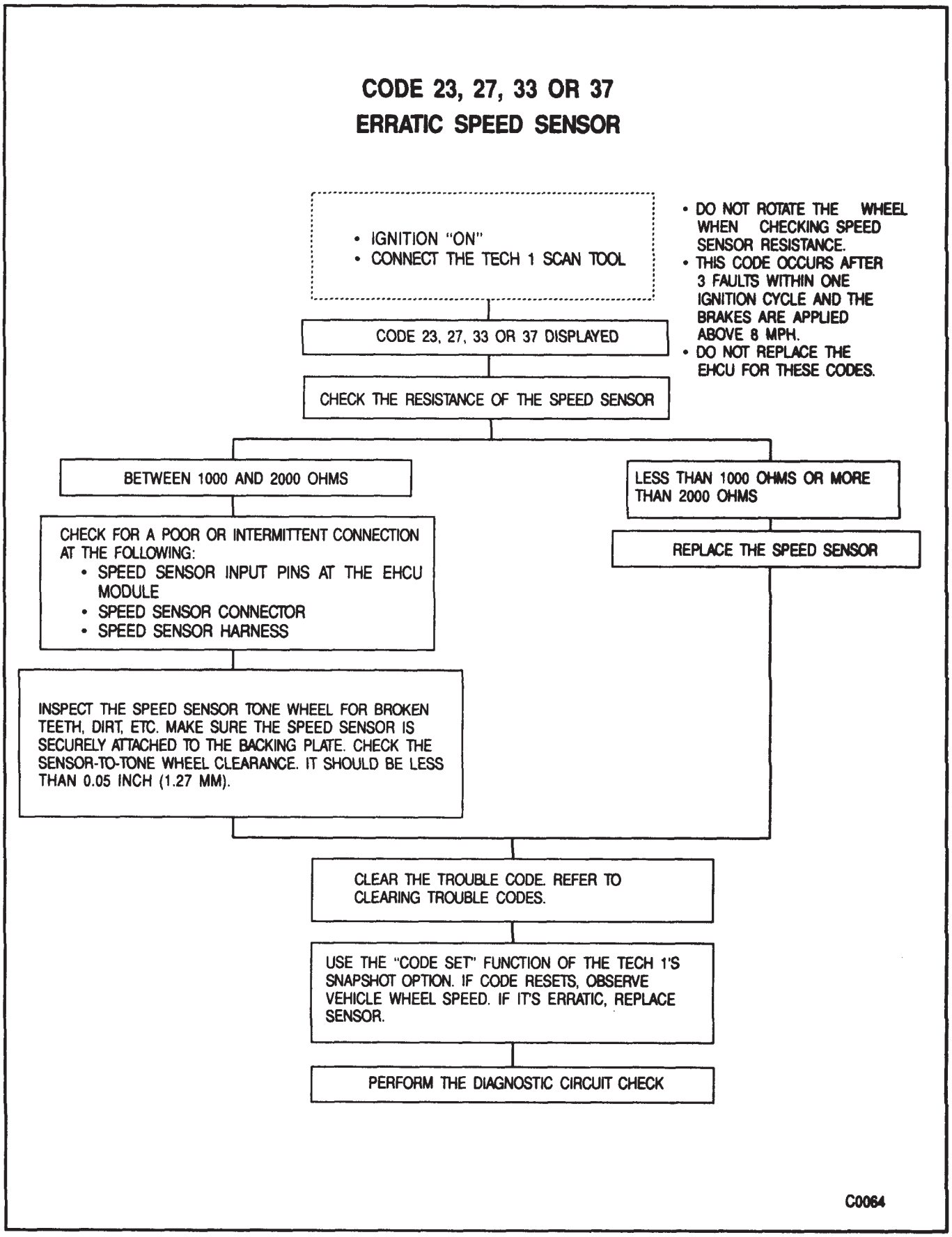

Figure 10-Code 23, 27, 33 or 37

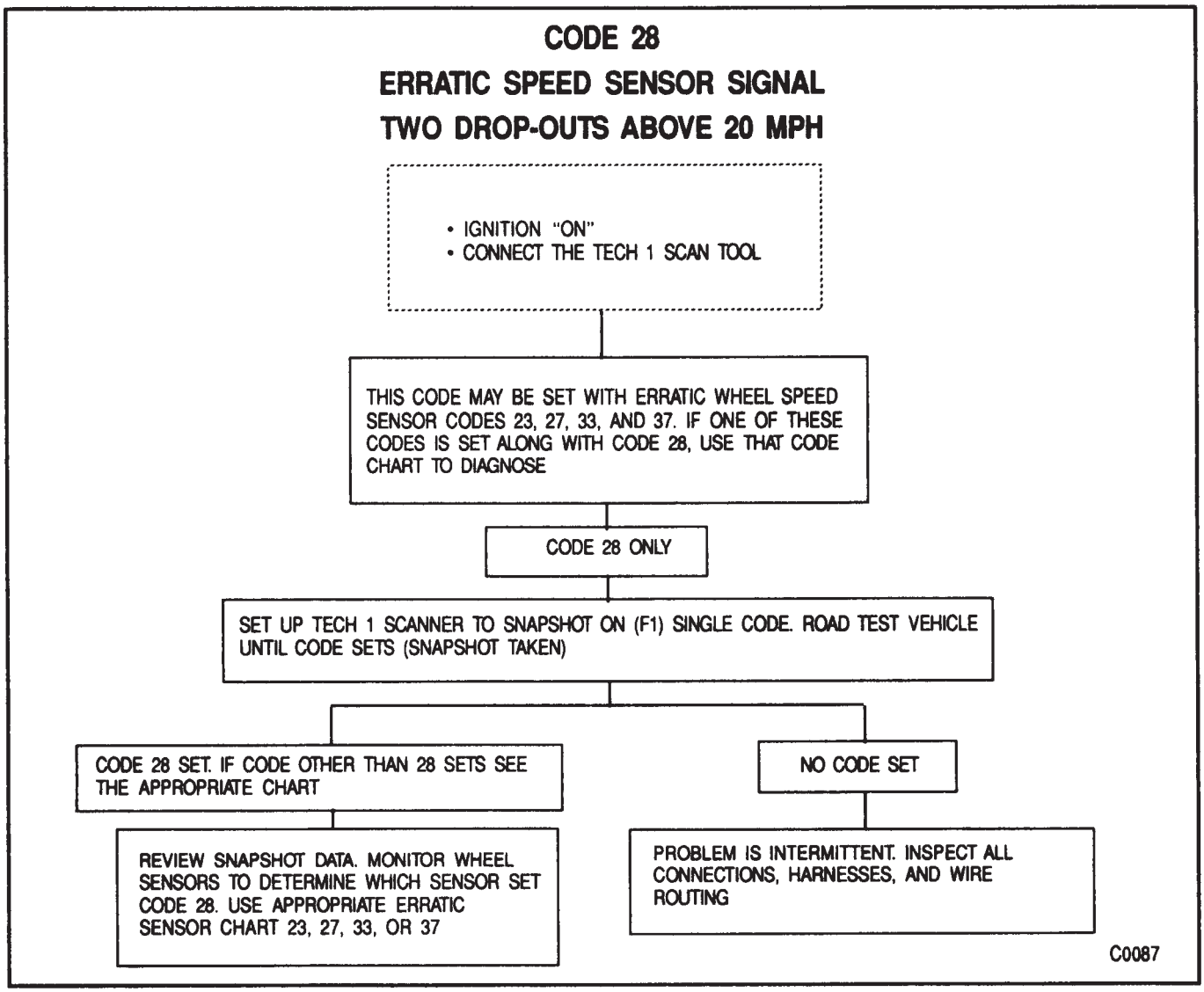

Figure 11—Code 28

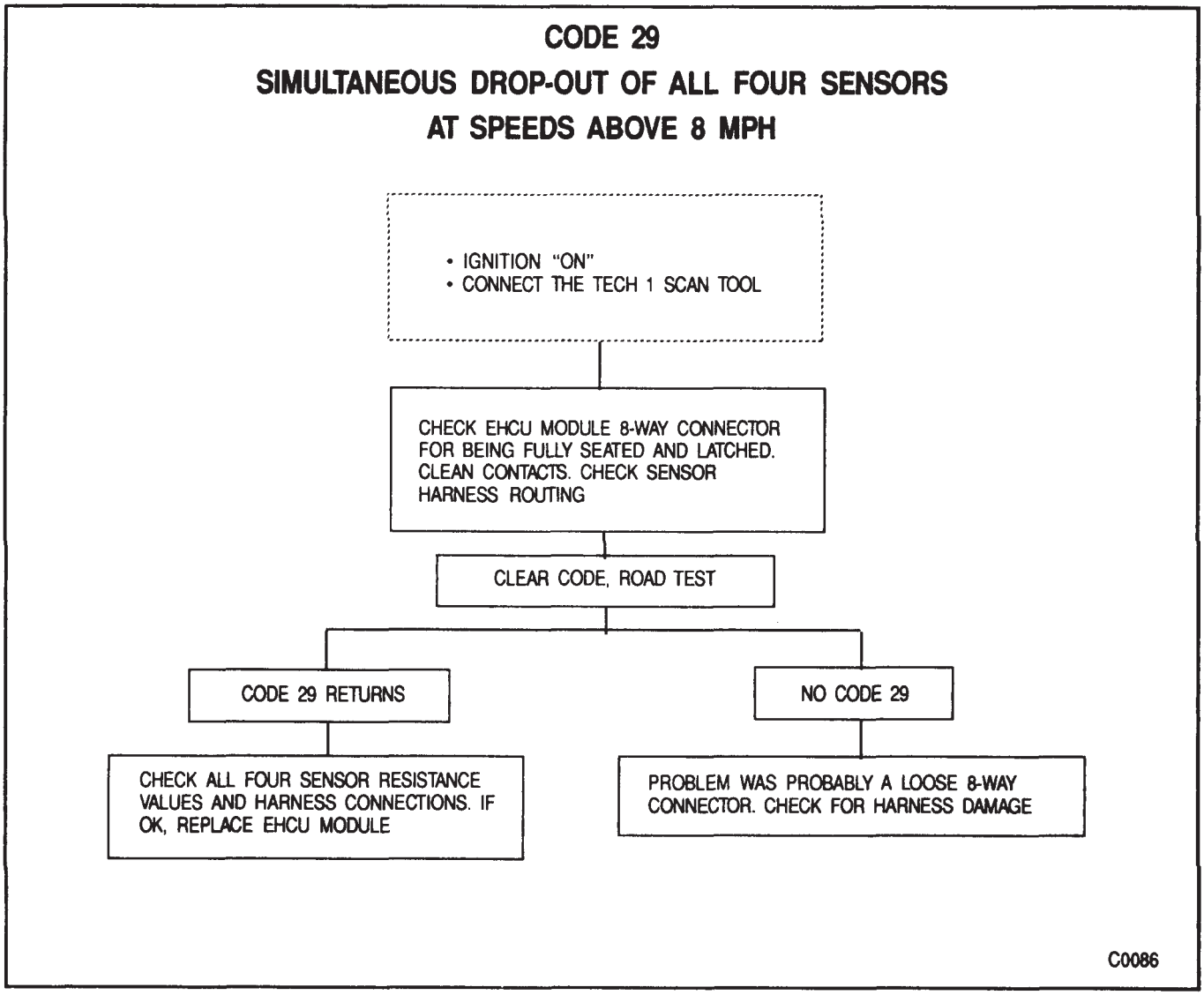

Figure 12—Code 29

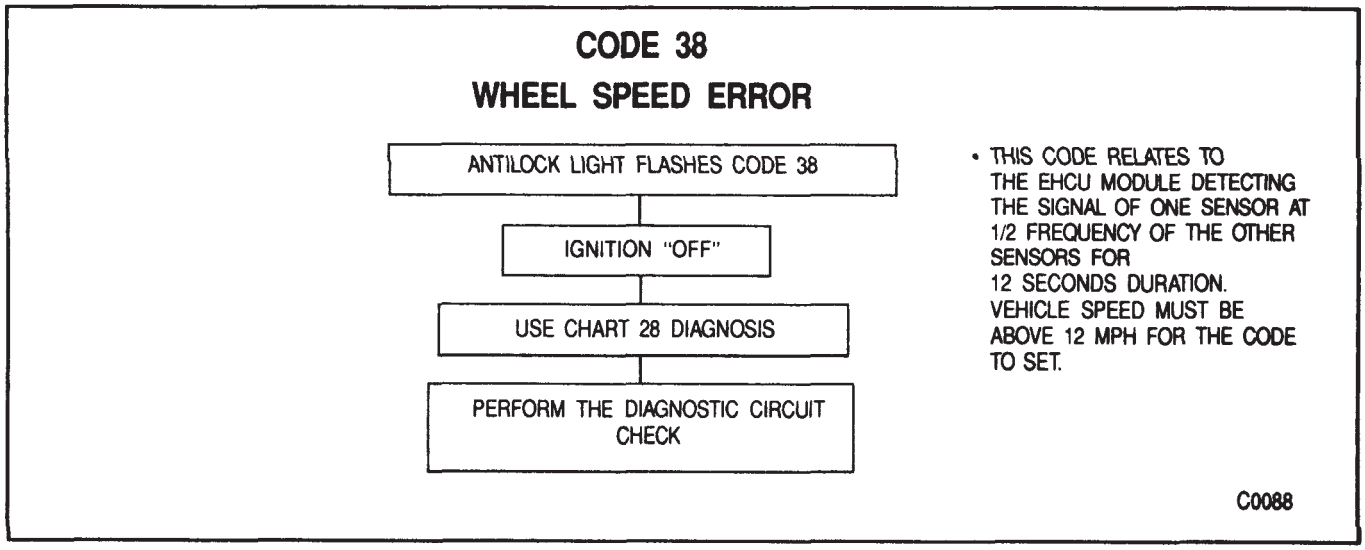

Figure 13—Code 38

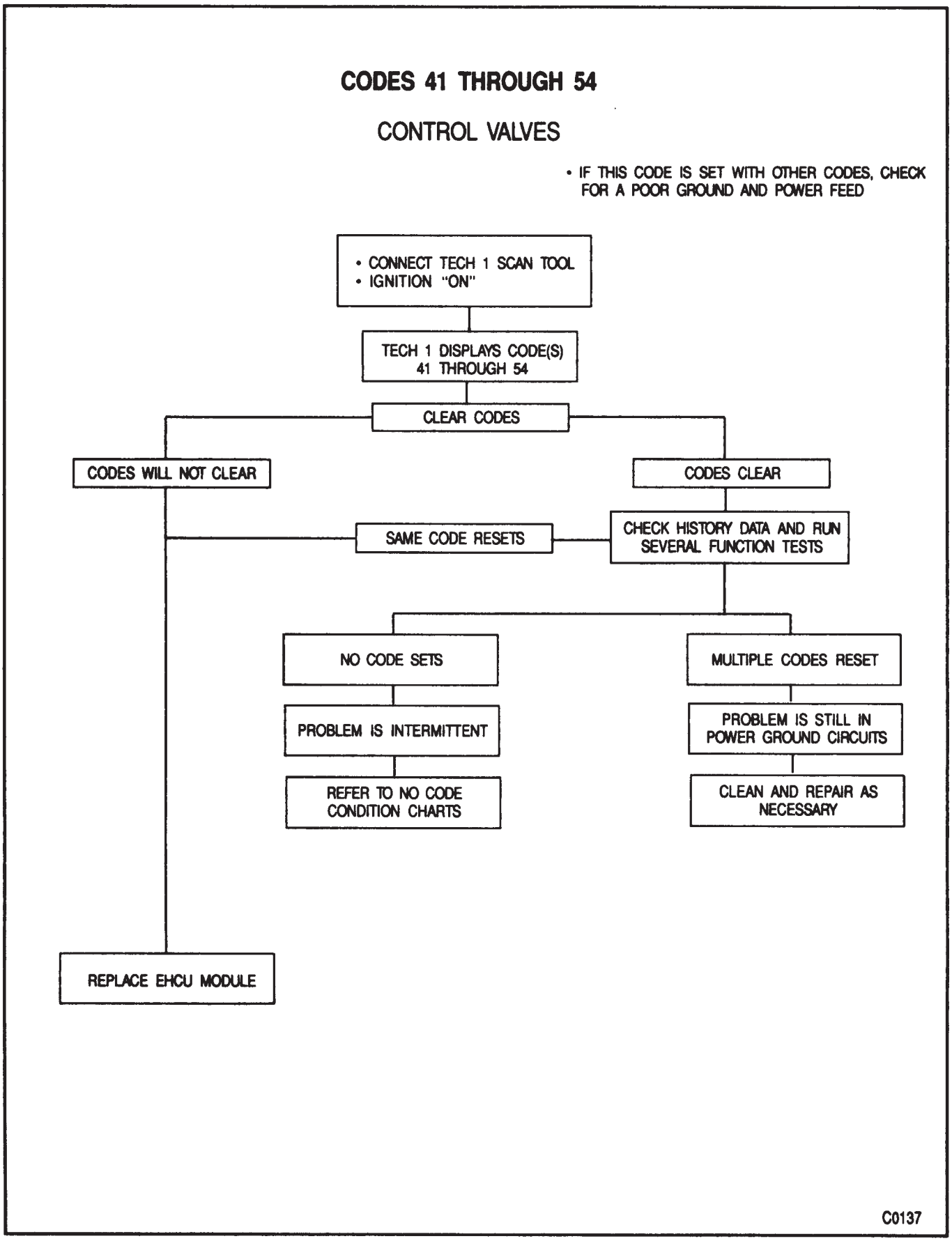

Figure 14—Codes 41 Through 54 Control Valves

CODES 61, 62 OR 63
RESET SWITCHES

- These codes can result during bleeding with the ignition ON. If this occurs, clear codes and perform this procedure.
- Because the EHCU gets its ground through the brake lines, if Codes 61, 62 and 63 occur together, check for a good brake-pipe-to-frame ground.

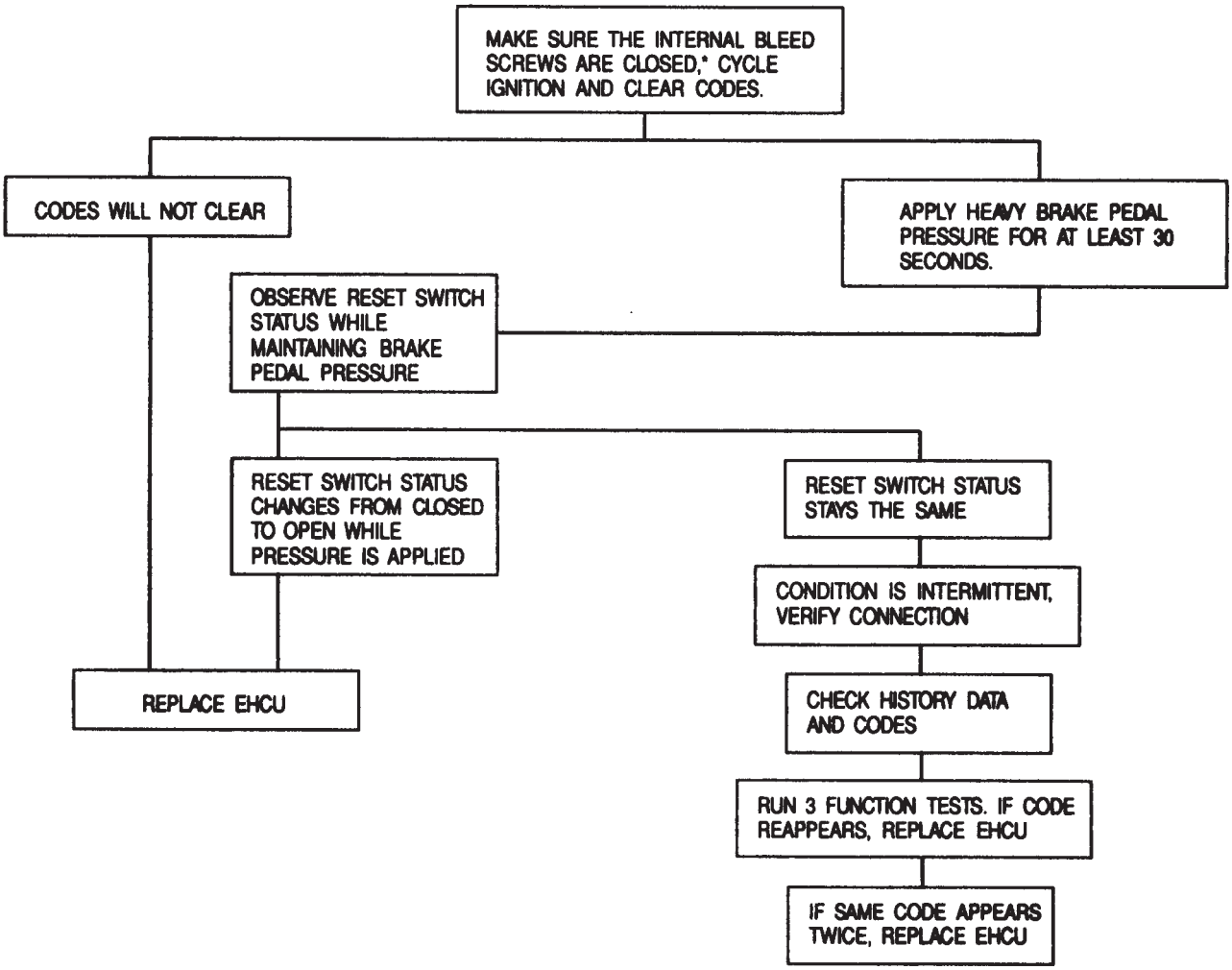

*TORQUE INTERNAL BLEED SCREWS TO 7 N·M OR 50 IN. LBS.

C0149

Figure 15—Codes 61, 62, or 63 Reset Switches

CODES 65 AND 66
OPEN OR SHORTED MOTOR RELAY

- If Code 65 appears with other code(s), first repair the other code(s), clear the code(s) and run three functions tests. If Code 65 resets, refer to this Diagnostic Chart.

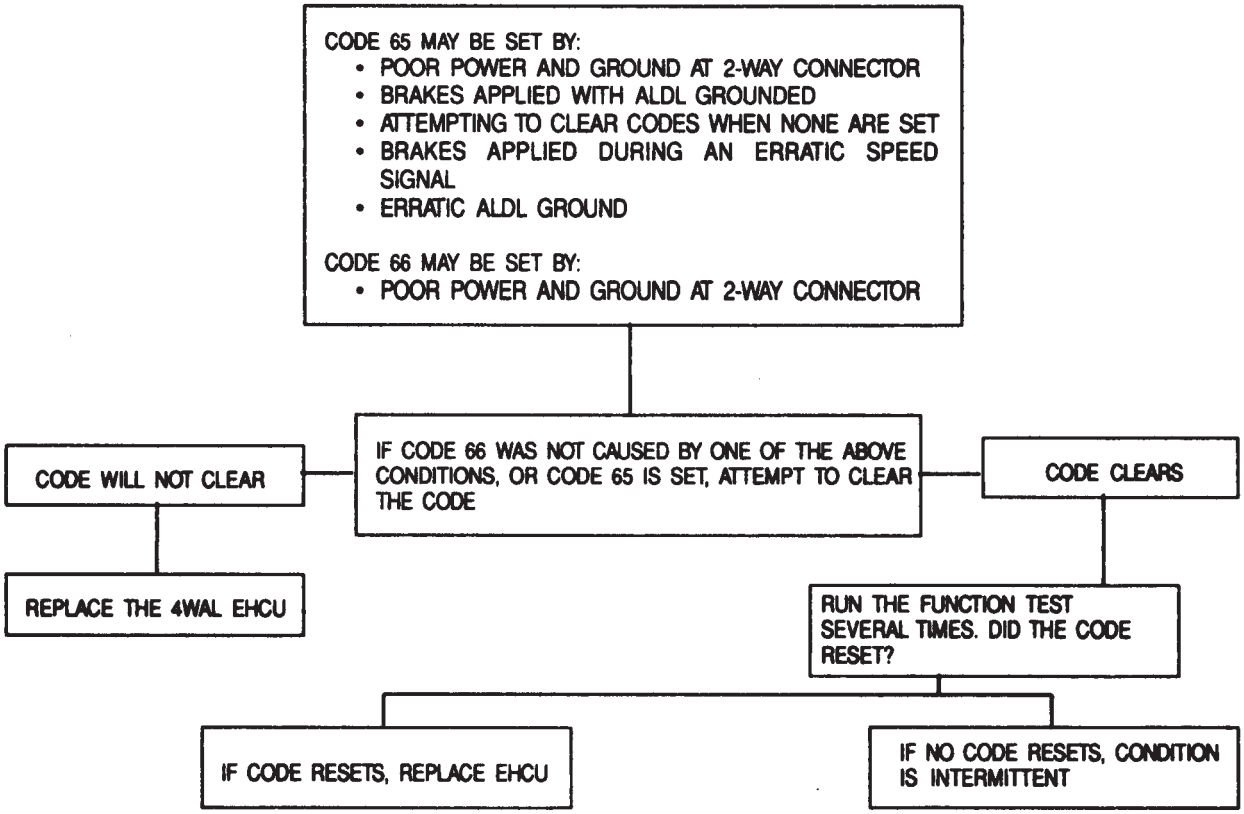

C0150

Figure 16—Codes 65 or 66

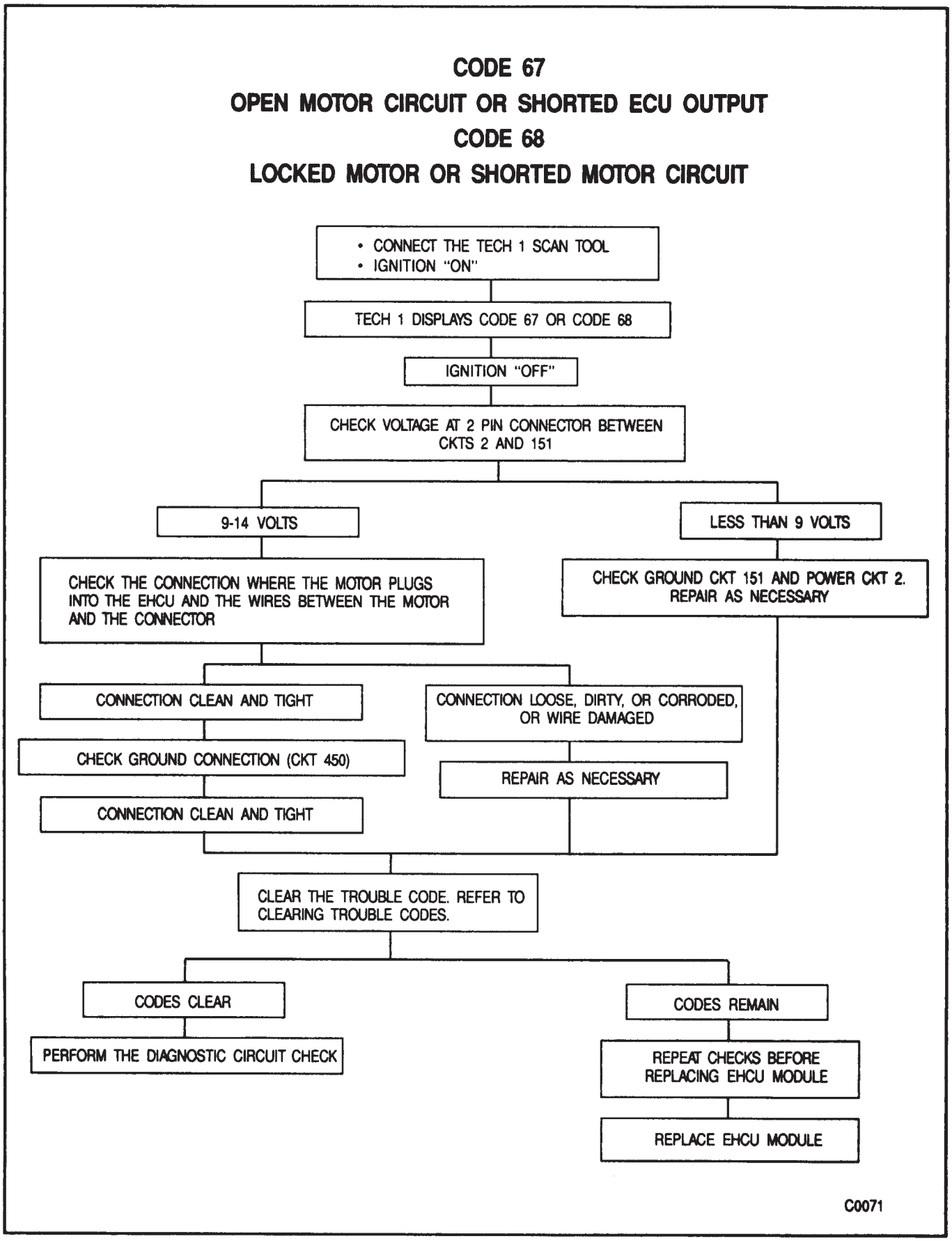

Figure 17—Codes 67 or 68

CODES 71 THROUGH 74

MEMORY ERRORS

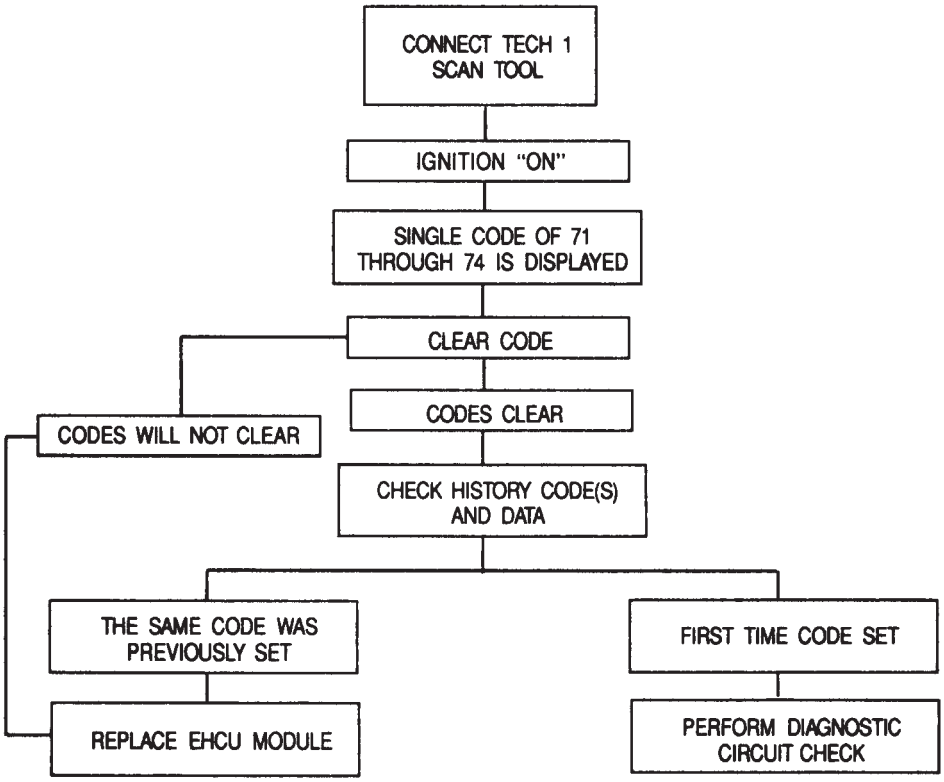

C0136

Figure 18—Codes 71 Through 74

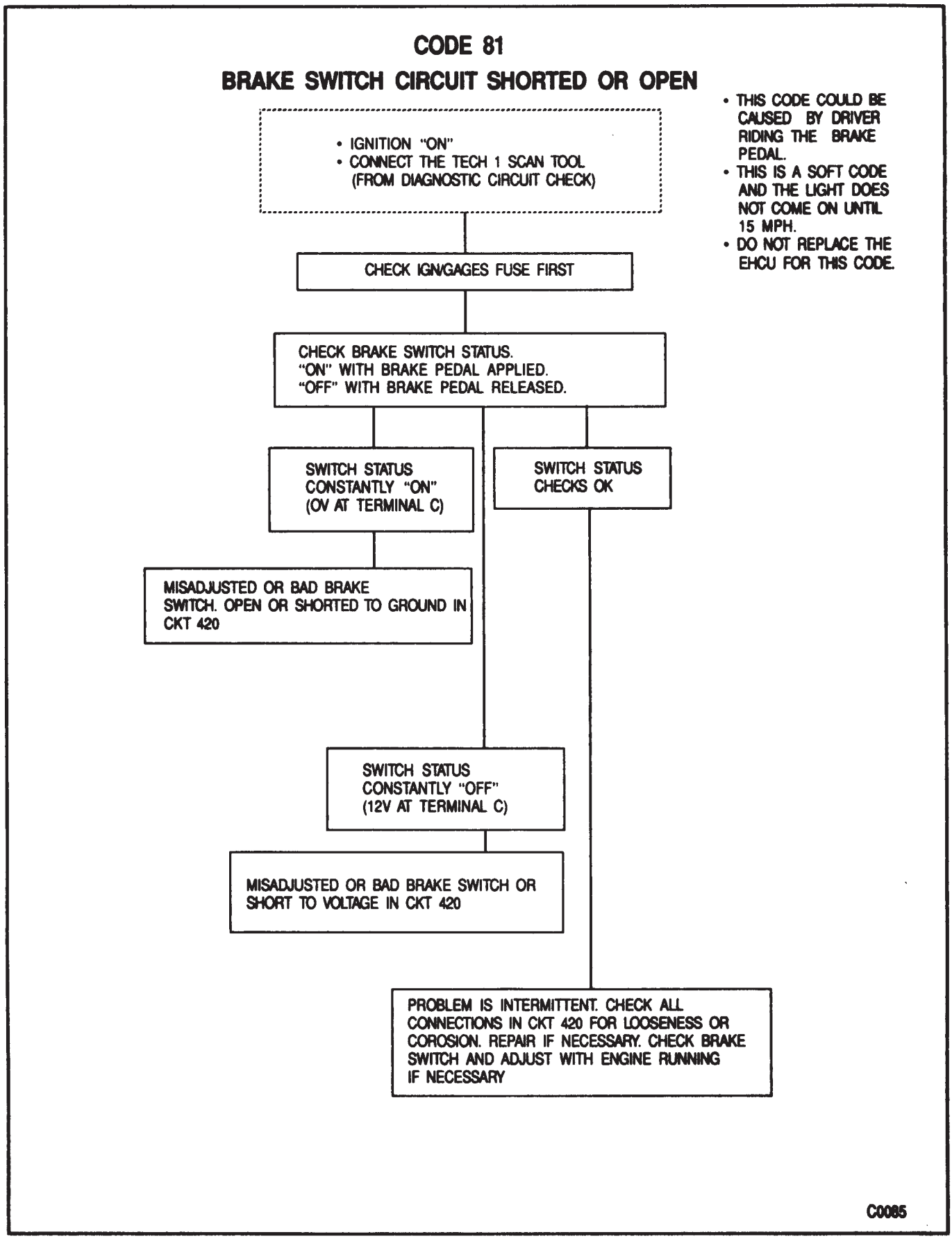

Figure 19—Code 81

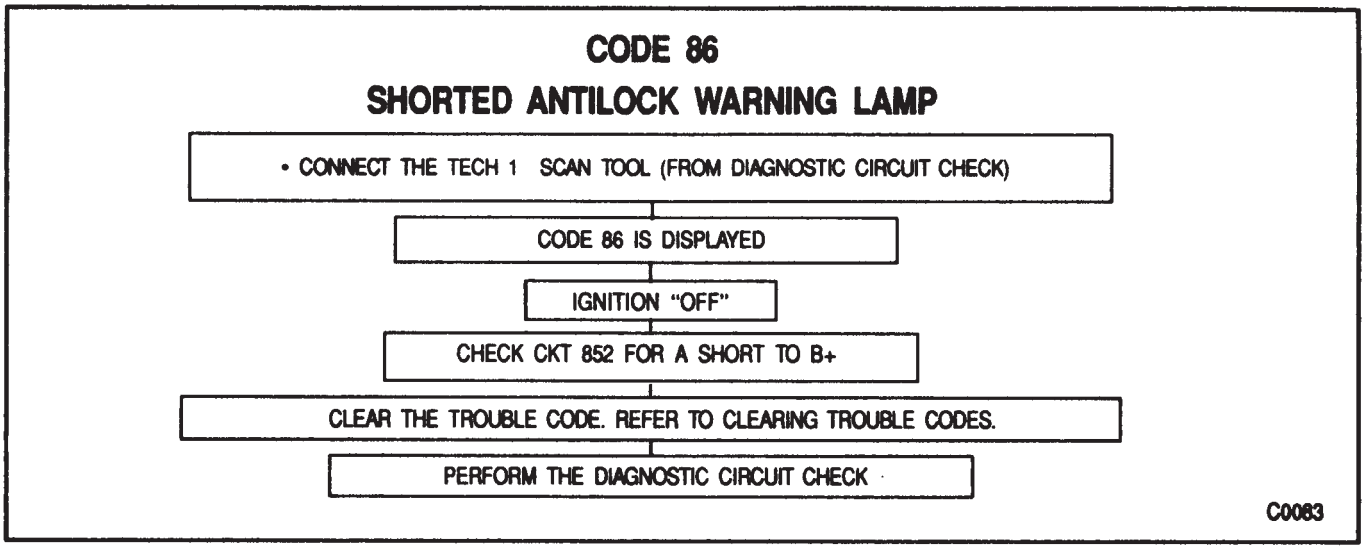

Figure 20—Code 86

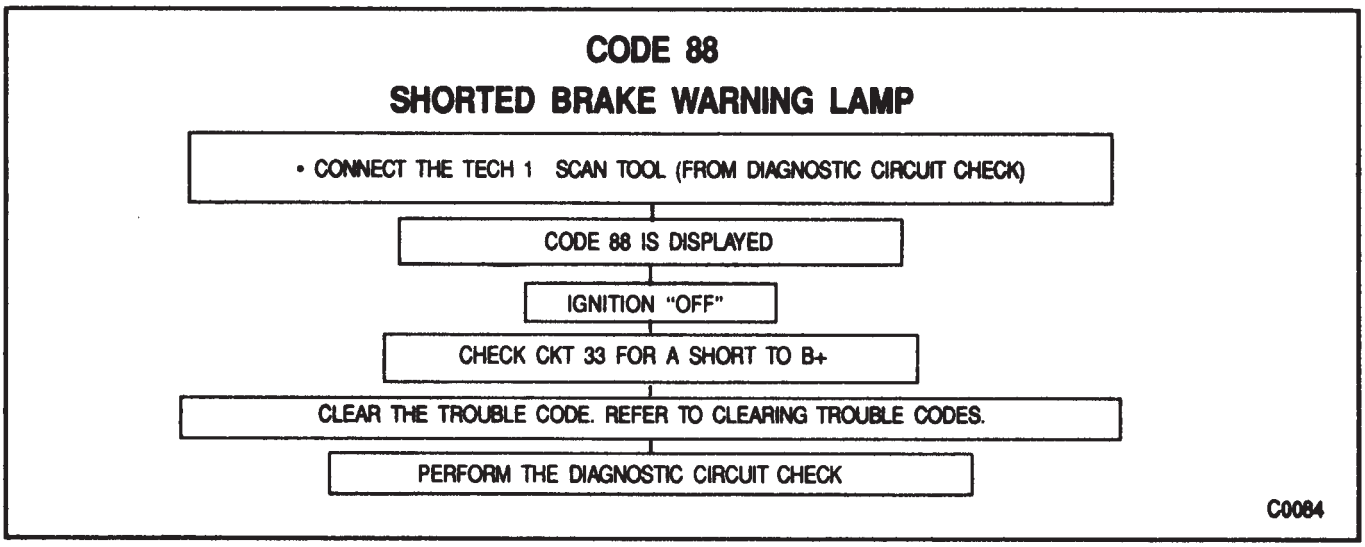

Figure 21—Code 88

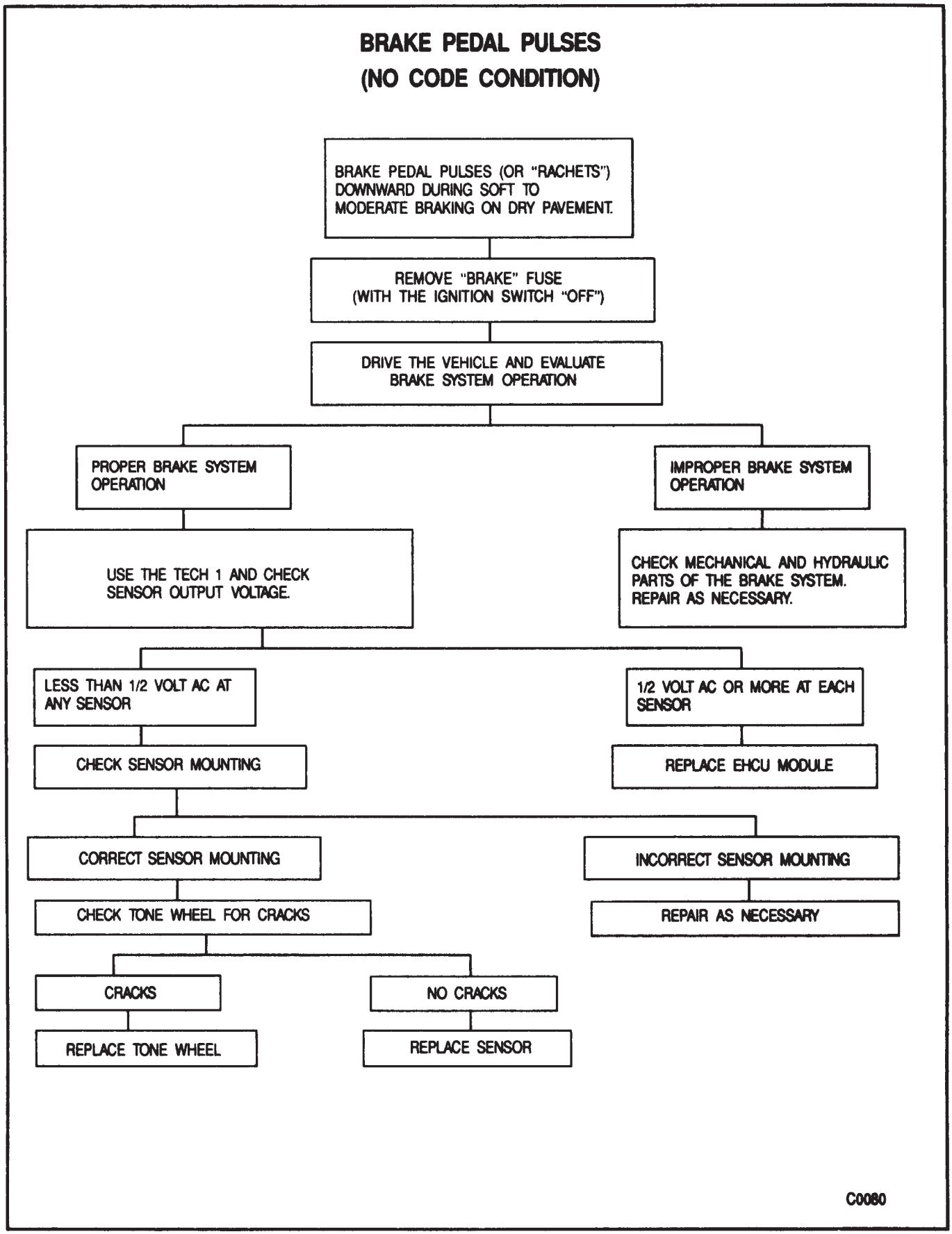

Figure 22—Brake Pedal Pulses (No Code)

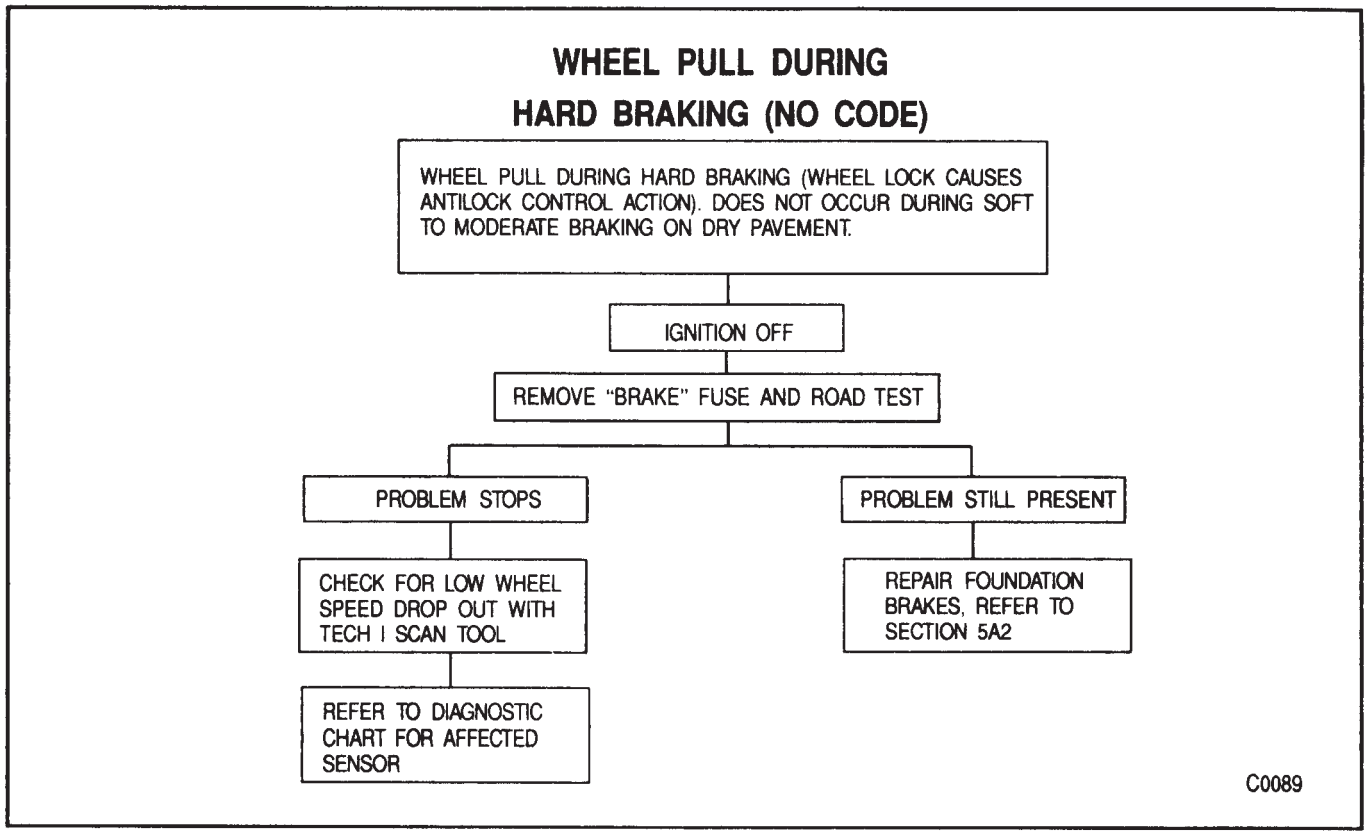

Figure 23—Wheel Pull During Hard Braking (No Code)

ON-VEHICLE SERVICE

WIRING AND CONNECTOR REPAIR

Wiring and connector repairs are important for the continued reliable operation of the vehicle. These repairs must be done as described in SECTION 8A.

EHCU MODULE REPLACEMENT

The EHCU module is not serviceable. It should be replaced when the diagnostic charts show it is the cause of a malfunction.

Remove or Disconnect (Figures 24 and 25)

1. Brake lines from the bottom of the combination valve.
2. Electrical connector from the combination valve.
3. Brake lines from EHCU module (A-E).
4. Electrical connectors from the EHCU module (7, 8, and 9).
5. Bolts (2).
6. EHCU module and bracket assembly from the vehicle.
7. EHCU module (3) from the mounting bracket (4).

Install or Connect (Figures 24 and 25)

NOTICE: For steps 2 and 4 see "Notice" on page 5E1-1.

1. EHCU module (3) to the mounting bracket (4).
2. Bolts (6) holding the EHCU module to the mounting bracket.

Tighten

- Bolts (6) to 7 N·m (60 in. lbs.). Over tightening these bolts could result in excessive noise transfer from the EHCU module.

3. EHCU module and bracket assembly into the vehicle.
4. Bolts (2).

Tighten

- Bolt (2) to 45 N·m (33 ft. lbs.).

5. Electrical connectors (7, 8, and 9) to the EHCU module.
6. Brake lines (A-E) to the EHCU module.

Tighten

- Brake line fittings to 25 N·m (16 ft. lbs.).

7. Electrical connector to the combination valve.
8. Brake lines to the bottom of the combination valve.

Tighten

- Brake line fittings to 20 N·m (15 ft. lbs.).

9. Bleed the brake system including the EHCU module. Refer to "Bleeding the EHCU Module."

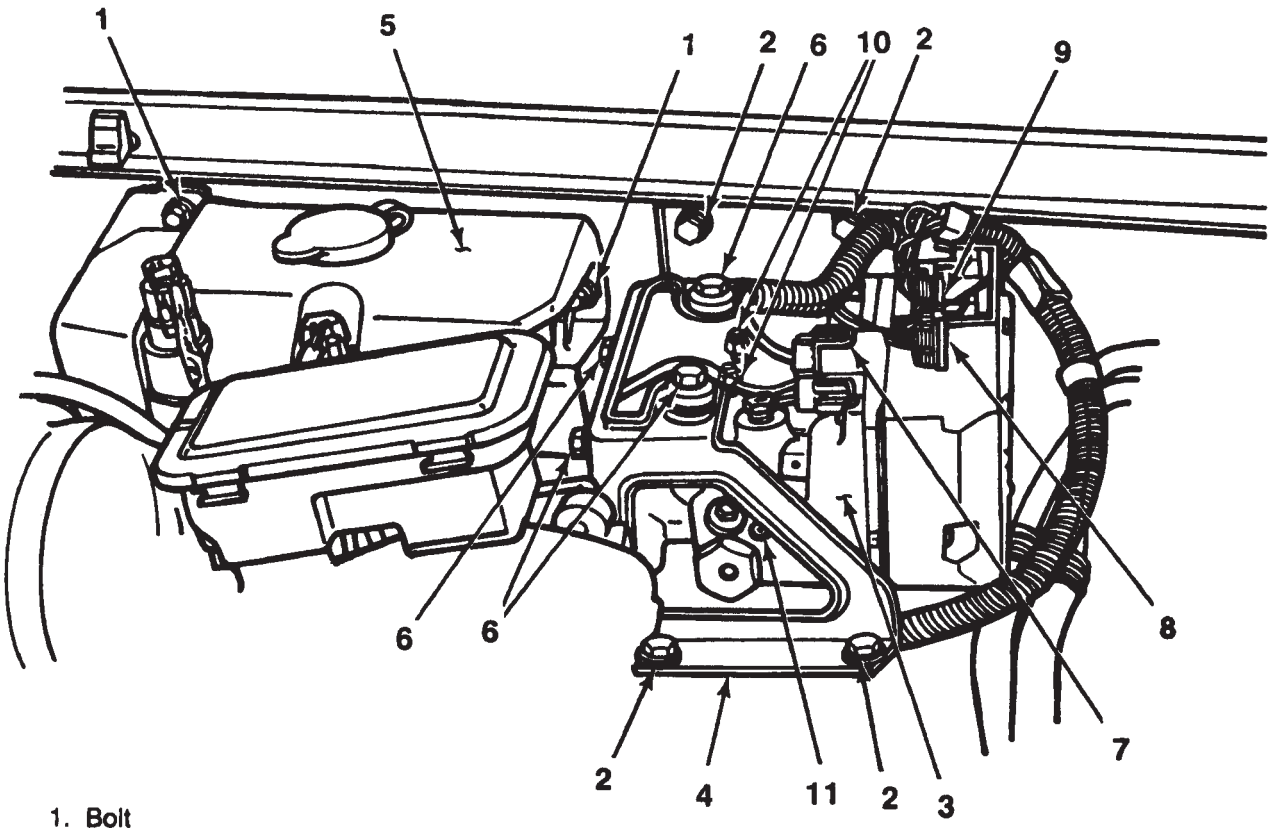

1. Bolt
2. Bolt
3., ECHU Valve
4. Bracket
5. Washer Tank Reservoir
6. Bolt
7. Two Prong Connector
8. Eight Prong Connector
9. Ten Prong Connector
10. Modulator Bleeders
11. Internal Bleed Valve

F9059

Figure 24—EHCU Module Mounting

FRONT WHEEL SPEED SENSOR REPLACEMENT

TWO WHEEL DRIVE

Remove or Disconnect (Figure 26)

1. Wheel and tire assembly.
2. Brake caliper. Refer to SECTION 5A2.
3. Hub and rotor assembly. Refer to SECTION 3C.
4. Sensor wire electrical connector.
5. Sensor wire from the clip on the upper control arm.
6. Bolts (10).
7. Sensor and splash shield assembly from the steering knuckle.

Install or Connect (Figure 26)

1. Sensor and splash shield assembly to the steering knuckle.
2. Bolts (10).

NOTICE: See "Notice" on page 5E1-1.

Tighten

- Bolts (10) to 15 N·m (11 ft. lbs.).

3. Sensor wire to the clip on the upper control arm.
4. Sensor wire electrical connector.
5. Hub and rotor assembly. Refer to SECTION 3C.
6. Brake caliper. Refer to SECTION 5A2.
7. Wheel and tire assembly.

FOUR WHEEL DRIVE

Remove or Disconnect (Figure 27)

1. Wheel and tire assembly.
2. Brake caliper. Refer to SECTION 5A2.
3. Brake rotor.
4. Hub and bearing assembly. Refer to SECTION 3C.
5. Sensor wire electrical connector.
6. Sensor wire from the clip on the upper control arm.

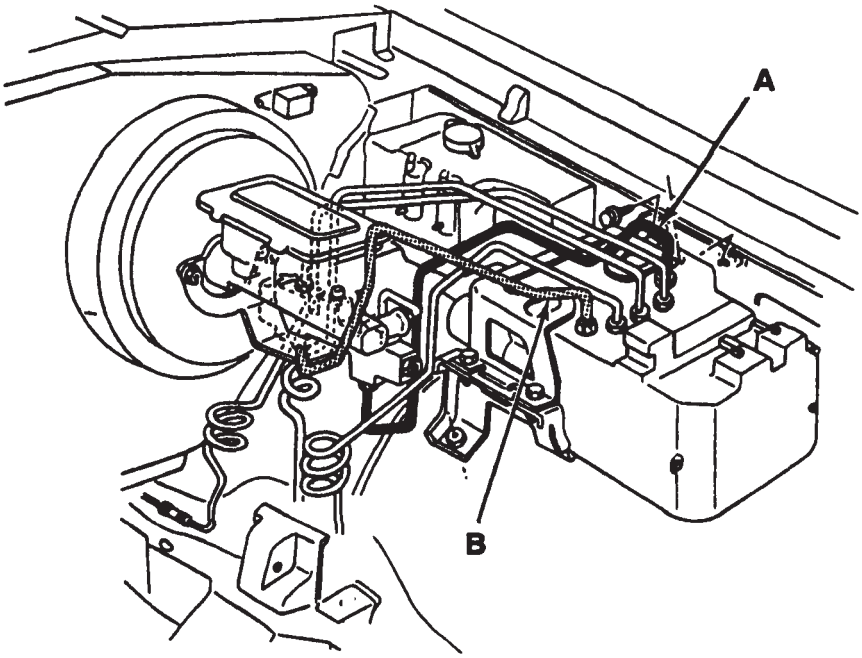

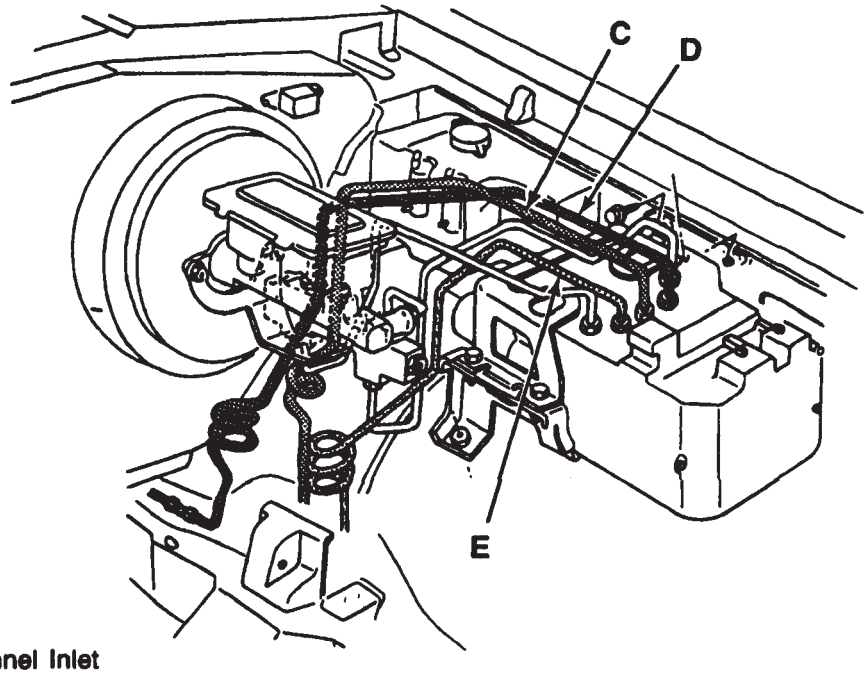

A. Rear Channel Inlet
B. Front Channel Inlet
C. Rear Channel Outlet
D. Left Front Channel Outlet
E. Right Front Channel Outlet

F8849

Figure 25—EHCU Module Brake Line Connections

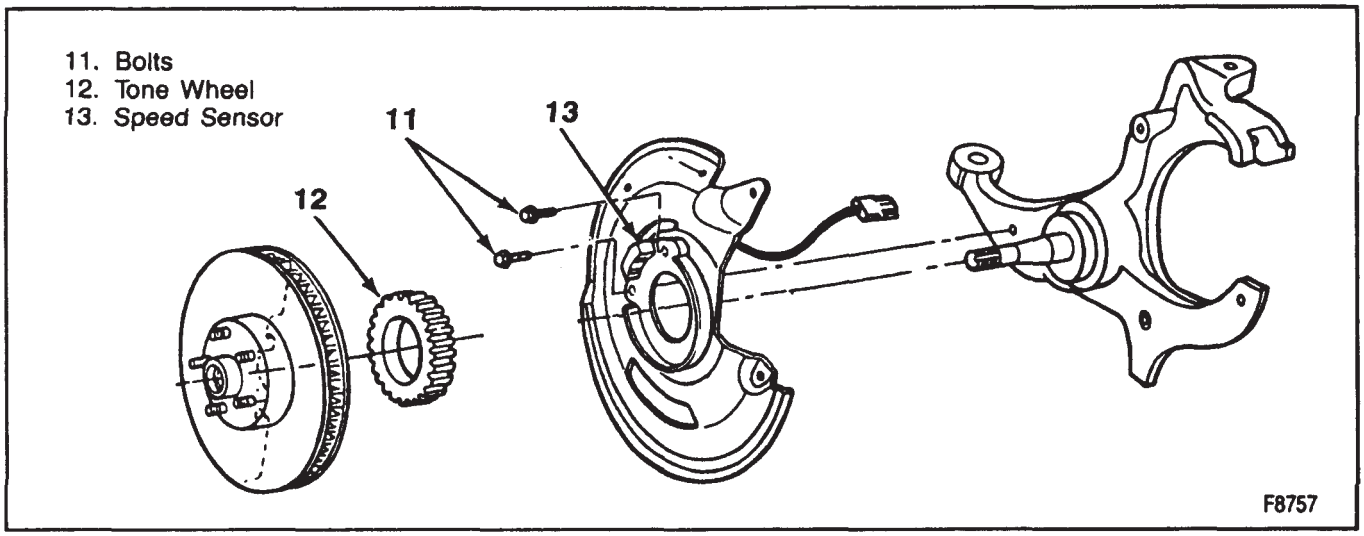

Figure 26—Front Wheel Speed Sensor (2WD)

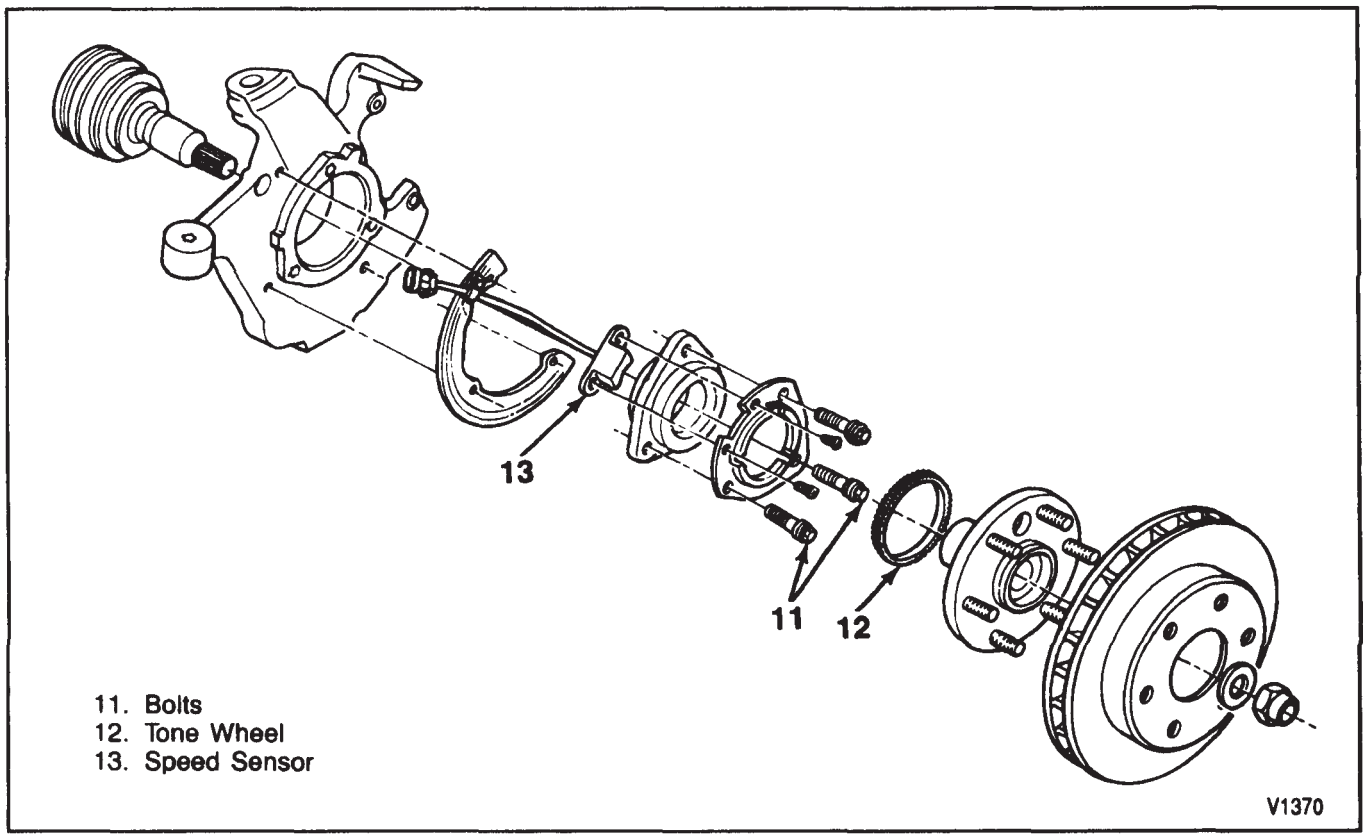

Figure 27—Front Wheel Speed Sensor (4WD)

7. Sensor and splash shield assembly from the steering knuckle.

Install or Connect (Figure 27)

1. Sensor and splash shield assembly to the steering knuckle.
2. Sensor wire to the clip on the upper control arm.
3. Sensor wire electrical connector.
4. Hub and bearing assembly. Refer to SECTION 3C.
5. Brake rotor.
6. Brake caliper. Refer to SECTION 5A2.
7. Wheel and tire assembly.

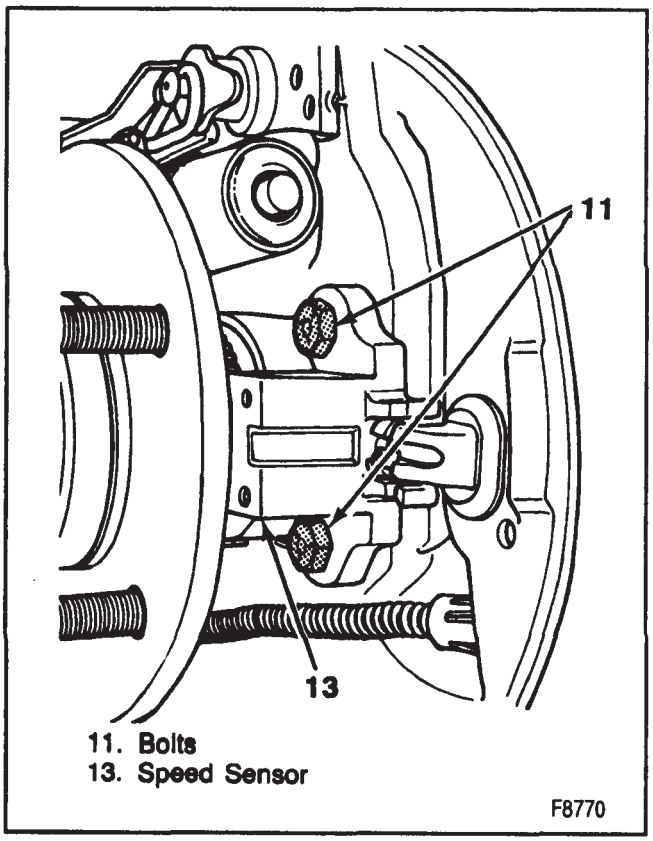

Figure 28—Rear Wheel Speed Sensor

REAR WHEEL SPEED SENSOR REPLACEMENT

Remove or Disconnect (Figure 28 and 29)

1. Wheel and tire assembly.
2. Brake drum.
3. Primary brake shoe. Refer to SECTION 5A2.
4. Sensor wire electrical connector.
5. Sensor wire from the rear axle clips.
6. Bolts (20).
7. Speed sensor (19) by pulling the wire through the hole in the backing plate.

Install or Connect (Figure 28)

1. Speed sensor (19).

NOTICE: See "Notice" on page 5E1-1.

2. Bolts (20).

Tighten

- Bolts (20) to 35 N·m (26 ft. lbs.).

3. Sensor wire to the rear axle clips.
4. Sensor wire electrical connector.
5. Primary brake shoe. Refer to SECTION 5A2.
6. Brake drum.
7. Wheel and tire assembly.

BLEEDING THE EHCU MODULE

The EHCU module should be bled after replacement or if air is trapped in the unit. Bleeding should not be necessary if the fluid is not contaminated or no air is in the module. Should the module need bleeding, it must be bled after the master cylinder and before the wheel cylinders and calipers.

Use the two bleeders on the front of the EHCU module for bleeding the fluid. The bleeders must not be opened when the system is not pressurized. There are Internal Bleed Valves on each side of the unit that open internal channels. Open the Internal Bleed Valves (item A, figure 30) 1/4 to 1/2 turn before bleeding the module.

NOTICE: The ignition switch must be in the "OFF" position or false trouble codes could be set to memory.

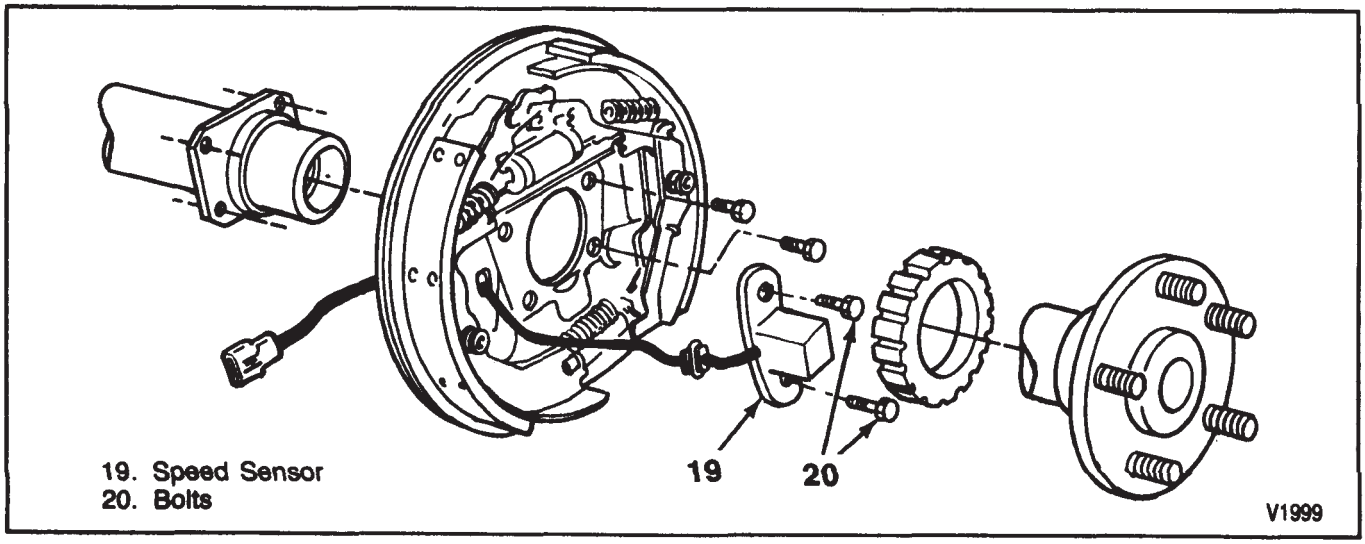

Figure 29—Removing the Rear Wheel Speed Sensor

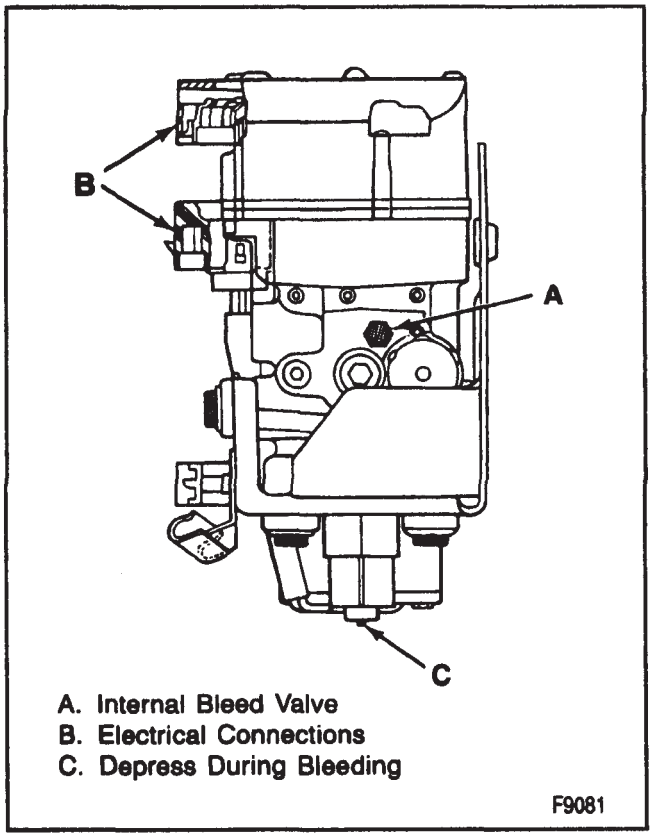

Figure 30—EHCU Module Bleeding

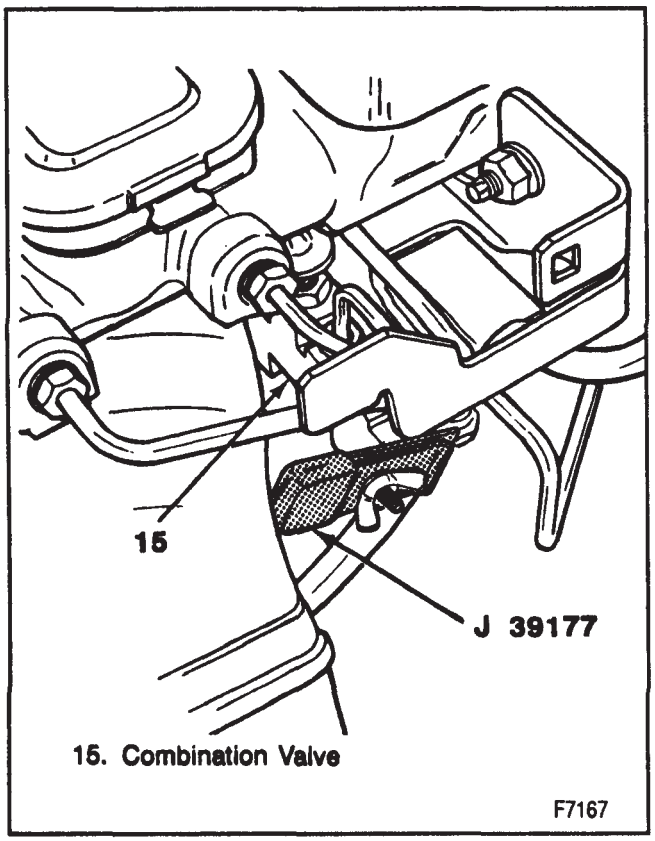

Figure 31—Combination Valve Pressure Bleeding Tool

Tools Required:
J 39177 Combination Valve Pressure Bleeding Tool (Three required)
TK 00000 Tech-1 Scanner
TK 02650 RWAL/4WAL Cartridge Kit

1. Open the internal bleed valves on the sides of the module 1/4 to 1/2 turn each (A).
2. J 39177 on the left high pressure accumulator bleed stem (C) of the EHCU module (figure 30).
3. J 39177 on the right high pressure accumulator bleed stem (C) of the EHCU module (figure 30).
4. J 39177 on the combination valve (figure 31).
5. Check the master cylinder reservoir fluid level and fill if needed.
6. Bleed the EHCU module.
   - Slowly apply the brake pedal one time and hold.
   - Open the left bleeder on the front of the unit until fluid flows clearly or the pedal is fully applied.
   - Close the left bleeder.
   - Slowly release the pedal.
   - Wait 15 seconds.
   - Repeat this sequence, including the 15-second wait, until all air is purged.
   - Close the left internal bleed valve (A).

Tighten

— Left internal bleed valve (A) to 7 N.m (60 in. lbs.).

   - Open the right bleeder on the front of the unit until fluid flows clearly or the pedal is fully applied.
   - Close the right bleeder.
   - Slowly release the pedal.
   - Wait 15 seconds.
   - Repeat this sequence, including the 15-second wait, until all air is purged.
   - Close the right internal bleed valve (A).

Tighten

— Right internal bleed valve (A) to 7 N.m (60 in. lbs.).

   - Remove the three J 39177 Combination Valve Pressure Bleeding Tools.

7. Check the master cylinder reservoir fluid level and fill if needed.
8. Bleed the wheel cylinders and calipers as described in SECTION 5A.
9. Turn the ignition switch "ON" and do three function tests with the Tech-1 scanner.
10. Evaluate brake pedal feel and braking performance.
11. Repeat the bleed procedure if needed.

SPECIFICATIONS

FASTENER TIGHTENING SPECIFICATIONS

Item	N·m	Ft. Lbs.
EHCU Module to Bracket Bolts	9	84*
EHCU Module Bracket to Body Bracket Bolt	27	20
Brake Pipe Fittings to EHCU Module	25	16
Brake Pipe Fittings to Combination Valve	20	15
Front Wheel Speed Sensor (2-WD)	15	11
Rear Wheel Speed Sensor	35	26
Internal Bleed Valves	7	60*

*Inch Pounds

T2335

SPECIAL TOOLS

1. 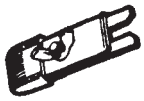 J 39177 (Three Required)

2. TK 00000

3. 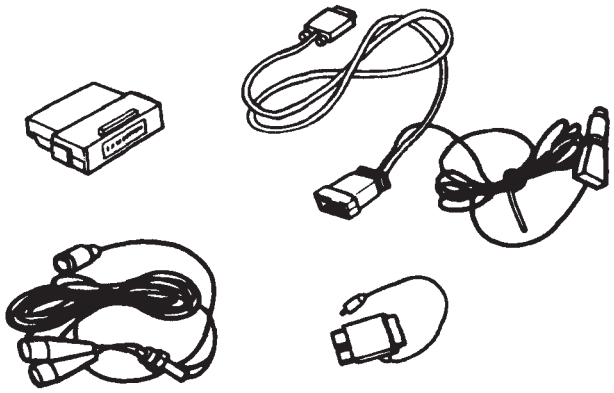 TK 02650 (4 Pieces)

1. Combination Valve Pressure Bleeding Tool
2. Tech-1 Scanner
3. RWAL/4WAL Cartridge Kit

F9080

SECTION 5E3A

REAR WHEEL ANTILOCK BRAKE SYSTEM

***NOTICE:** When fasteners are removed, always reinstall them at the same location from which they were removed. If a fastener needs to be replaced, use the correct part number fastener for that application. If the correct part number fastener is not available, a fastener of equal size and strength (or stronger) may be used. Fasteners that are not reused and those requiring thread locking compound will be called out. The correct torque value must be used when installing fasteners that require it. If the above conditions are not followed, parts or system damage could result.*

CONTENTS

SUBJECT	PAGE
General Description	5E3A- 2
Abbreviations/Definitions	5E3A- 2
Basic Knowledge Required	5E3A- 2
System Operation	5E3A- 3
Base Braking Mode	5E3A- 3
Antilock Braking Mode	5E3A- 3
Tires and RWAL	5E3A- 3
Warning Lamp Operation	5E3A- 3
System Components	5E3A- 3
Electric Brake Control Module	5E3A- 3
Antilock Pressure Valve	5E3A- 3
Vehicle Speed Sensor	5E3A- 4
Vehicle Speed Sensor Buffer	5E3A- 4
Component Location Views	5E3A- 4
Diagnosis	5E3A- 5
Diagnostic Process	5E3A- 5
Self-Diagnostics	5E3A- 5
Displaying Diagnostic Trouble Codes	5E3A- 5
Clearing Diagnostic Trouble Codes	5E3A- 5
Intermittents and Poor Connections	5E3A- 5
Tech 1 Diagnostics	5E3A- 5
Mode F3 - Miscellaneous Test	5E3A- 6
Mode F4 - VSS Monitor	5E3A- 6
Functional Test	5E3A- 7
Diagnostic Trouble Code and Symptom Table	5E3A- 8
Wiring Diagram	5E3A- 9
Connector Face Views	5E3A-10
On-Vehicle Service	5E3A-40
Service Precautions	5E3A-40
Checking and Adding Fluid	5E3A-40
Bleeding System	5E3A-40
Electric Brake Control Module	5E3A-40
Antilock Pressure Valve	5E3A-41
Vehicle Speed Sensor	5E3A-41
Warning Lamp	5E3A-41
Specifications	5E3A-41
Fastener Tightening Specifications	5E3A-41
Special Tools	5E3A-42

GENERAL DESCRIPTION

This section covers diagnosis and service procedures for the rear wheel antilock brake system (figure 1). The RWAL system reduces the occurrence of rear wheel lock-up during a severe brake application. It does this by regulating hydraulic pressure in the rear brake lines.

ABBREVIATIONS/DEFINITIONS

APV ..... Antilock Pressure Valve
CKT ..... Circuit
DLC ..... Data Link Connector
DTC ..... Diagnostic Trouble Code
DVM ..... Digital Volt Meter
EBCM ..... Electric Brake Control Module
4WD ..... Four Wheel Drive
RWAL ..... Rear Wheel Antilock
2WD ..... Two Wheel Drive
VSS ..... Vehicle Speed Sensor

BASIC KNOWLEDGE REQUIRED

Before attempting to diagnose the RWAL system, you must have a good understanding of electrical system basics and the use of circuit testing tools. Without this basic knowledge it will be difficult to use the diagnostic procedures detailed in this section.

Some electrical basics, basic troubleshooting procedures and hints, and the use of circuit testing tools are discussed in the Electrical Diagrams and Diagnosis Manual.

- BASIC ELECTRICAL CIRCUITS
  - — You should understand the basic theory of electricity, series and parallel circuits, and voltage drops across series and parallel resistor systems.
  - — You should know the meaning of volts (voltage), amps (current), and ohms (resistance).
  - — You should understand what happens in a circuit with an open wire or a wire shorted to ground or battery.
  - — You should be able to read and understand a wiring diagram.
- USE OF CIRCUIT TESTING TOOLS
  - — You should know how to use a digital volt meter (DVM) to measure voltage, current, and resistance.
  - — Be aware that when DVM use is requested, the first terminal listed in the check is intended to be connected to the positive (usually red) DVM lead.
  - — You should be familiar with the operation and capabilities of the Tech 1 scan tool and the RWAL/4WAL cartridge used with it.
  - — You should know how to use jumper wires to test circuits.

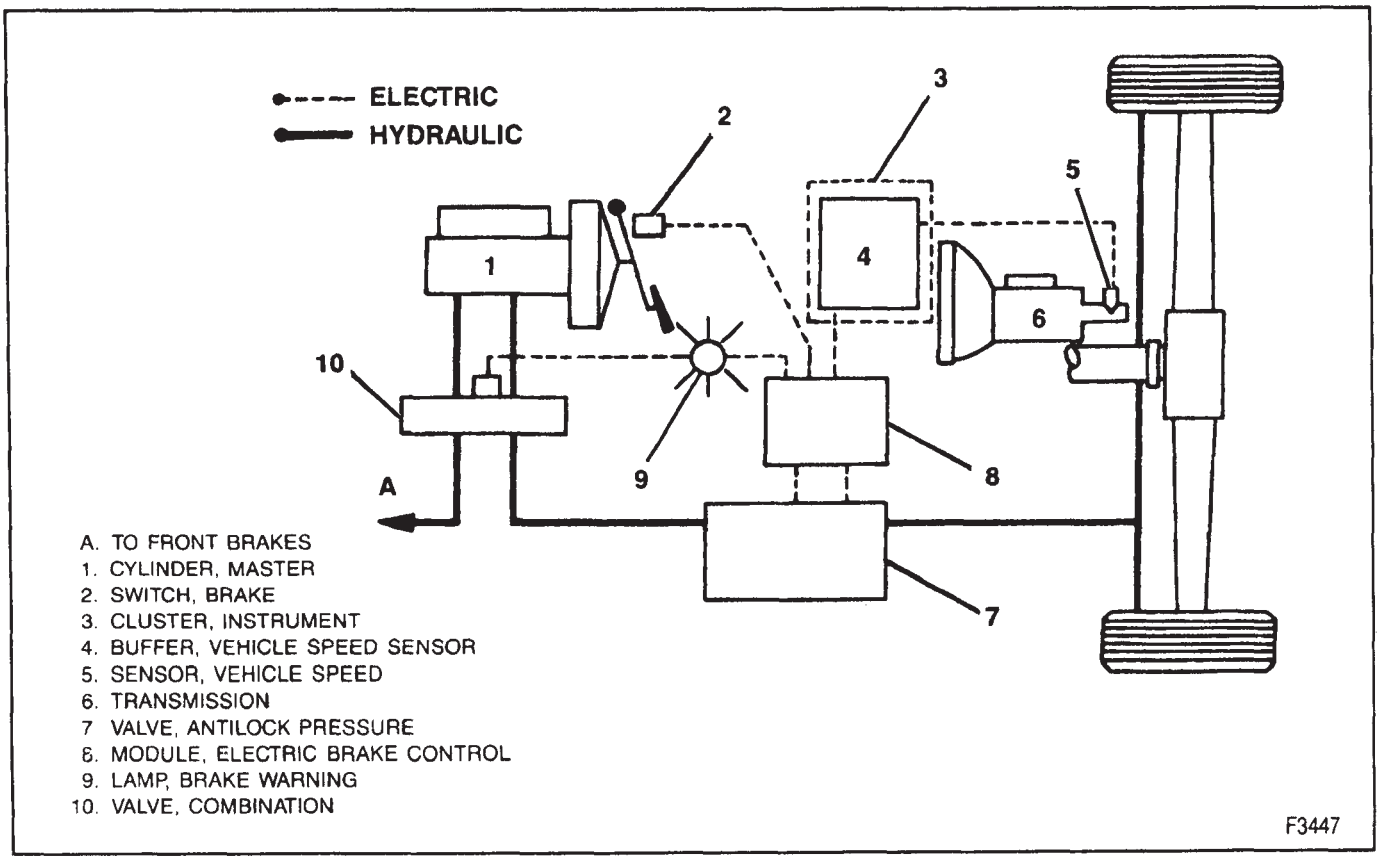

Figure 1—Rear Wheel Antilock Brake System

SYSTEM OPERATION

The purpose of the rear wheel antilock (RWAL) brake system is to maintain vehicle stability under severe braking conditions on most road surfaces. The RWAL system monitors the speed of the rear wheels during a braking maneuver. The electric brake control module (EBCM) processes these values to produce command controls to prevent the rear wheels from locking.

BASE BRAKING MODE

During normal braking, the EBCM receives a signal from the brake switch and begins to monitor the vehicle speed line. The isolation valve is open and the dump valve is seated. This allows fluid under pressure to pass through the APV and travel to the rear brake channel. The reset switch does not move because hydraulic pressure is equal on both sides.

ANTILOCK BRAKING MODE

During a brake application the EBCM compares vehicle speed to the program built into it. When it senses a rear wheel lock-up condition, it operates the antilock pressure valve to keep the rear wheels from locking up. To do this the EBCM uses a three step cycle:

- Pressure Maintain
- Pressure Decrease
- Pressure Increase

Pressure Maintain

During pressure maintain the EBCM energizes the isolation solenoid to stop the flow of fluid from the master cylinder to the rear brakes. The reset switch moves when the difference between the master cylinder line pressure and the rear brake channel pressure becomes great enough. If this happens, it grounds the EBCM logic circuit.

Pressure Decrease

During pressure decrease the EBCM keeps the isolation solenoid energized and energizes the dump solenoid. The dump valve moves off its seat and fluid under pressure moves into the accumulator. This action reduces rear pipe pressure preventing rear lock-up. The reset switch grounds to tell the EBCM that pressure decrease has taken place.

Pressure Increase

During pressure increase the EBCM de-energizes the dump and isolation solenoids. The dump valve reseats and holds the stored fluid in the accumulator. The isolation valve opens and allows the fluid from the master cylinder to flow past it and increase pressure to the rear brakes. The reset switch moves back to its original position by spring force. This action signals the EBCM that pressure decrease has ended and driver applied pressure resumes.

Accumulator Bleed-Down

When the brake pedal is released, the accumulator spring and piston push the stored fluid back to the master cylinder past a lip seal on the dump valve.

System Self-Test

When the ignition switch is turned "ON," the EBCM performs a system self-test. It checks its internal and external circuit and performs a function test by cycling the isolation and dump valves. The EBCM then begins its normal operation if no malfunctions are detected.

Brake pedal pulsation and occasional rear tire "chirping" are normal during RWAL operation. The road surface and severity of the braking maneuver determine how much these will occur. Since these systems only control the rear wheels, it is still possible to lock the front wheels during certain severe braking conditions.

TIRES AND RWAL

Spare Tire

Using the spare tire supplied with the vehicle will not affect the performance of the RWAL system.

Replacement Tire

Tire size can affect the performance of the RWAL system. Replacement tires must be the same size, load range, and construction on all four wheels.

Speedometer Calibration

The vehicle speed sensor (VSS) buffer, must be replaced when the rear axle ratio or tire size is changed. Refer to SECTION 8C.

WARNING LAMP OPERATION

BRAKE Lamp

The RWAL system uses the existing BRAKE warning lamp in the instrument panel to indicate system operation and malfunctions. The BRAKE lamp is also used to show a hydraulic system pressure differential condition and parking brake operation.

Normal Operation

A bulb check occurs each time the ignition switch is turned "ON." The BRAKE lamp should light, remain on for about two seconds, then turn off. When system malfunctions occur, the BRAKE lamp will turn on and stay on until the malfunction is corrected. To determine the specific cause of a malfunction, refer to "Functional Test."

The BRAKE lamp will also light when the parking brake is applied or the combination valve switch is activated. Do not confuse these functions with an RWAL system malfunction.

SYSTEM COMPONENTS

ELECTRIC BRAKE CONTROL MODULE

The electric brake control module (EBCM) mounts to a bracket next to the master cylinder (figure 2). It contains a microprocessor and the software for system operation. During a severe brake application the EBCM controls the antilock pressure valve (APV) to prevent the rear wheels from locking up. The EBCM receives input signals from the vehicle speed sensor (VSS) buffer, stop lamp switch, and front axle switch on 4WD applications.

ANTILOCK PRESSURE VALVE

The antilock pressure valve (APV) mounts to the combination valve under the master cylinder. The APV has an isolation valve to maintain or increase hydraulic pressure, a dump valve to reduce hydraulic pressure, and an accumulator to store brake fluid during the dump cycle. The EBCM uses the APV to control hydraulic pressure in the rear brake pipes.

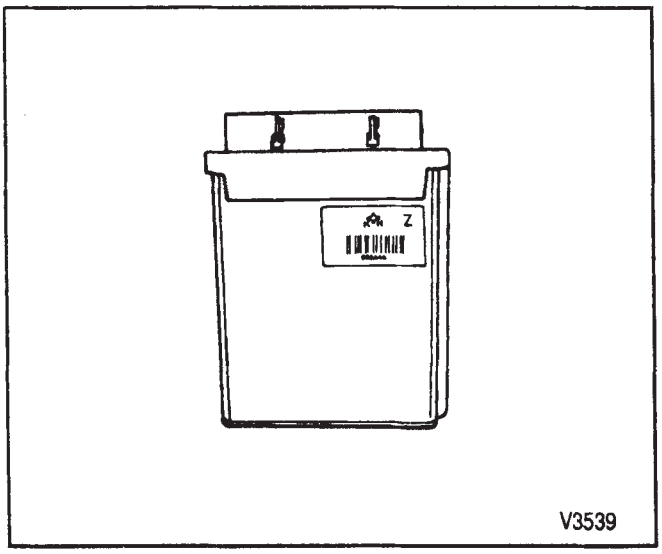

Figure 2—Electric Brake Control Module

VEHICLE SPEED SENSOR

The vehicle speed sensor (VSS) is located in the left rear of the transmission on two-wheel drive models and on the transfer case for four-wheel drive models. The VSS produces an AC voltage signal that varies in frequency according to the output shaft speed. The resistance value of the VSS winding should be 900 to 2000 ohms.

VEHICLE SPEED SENSOR BUFFER

The VSS sends its signal to the vehicle speed sensor (VSS) buffer located behind the glove box. The VSS buffer changes the AC sine-wave signal from the VSS to a DC square-wave signal. If the axle ratio or tire size is changed, it will be necessary to replace the VSS buffer. Refer to "Speedometer Calibration."

COMPONENT LOCATION VIEWS

For component location views, refer to figure 3.

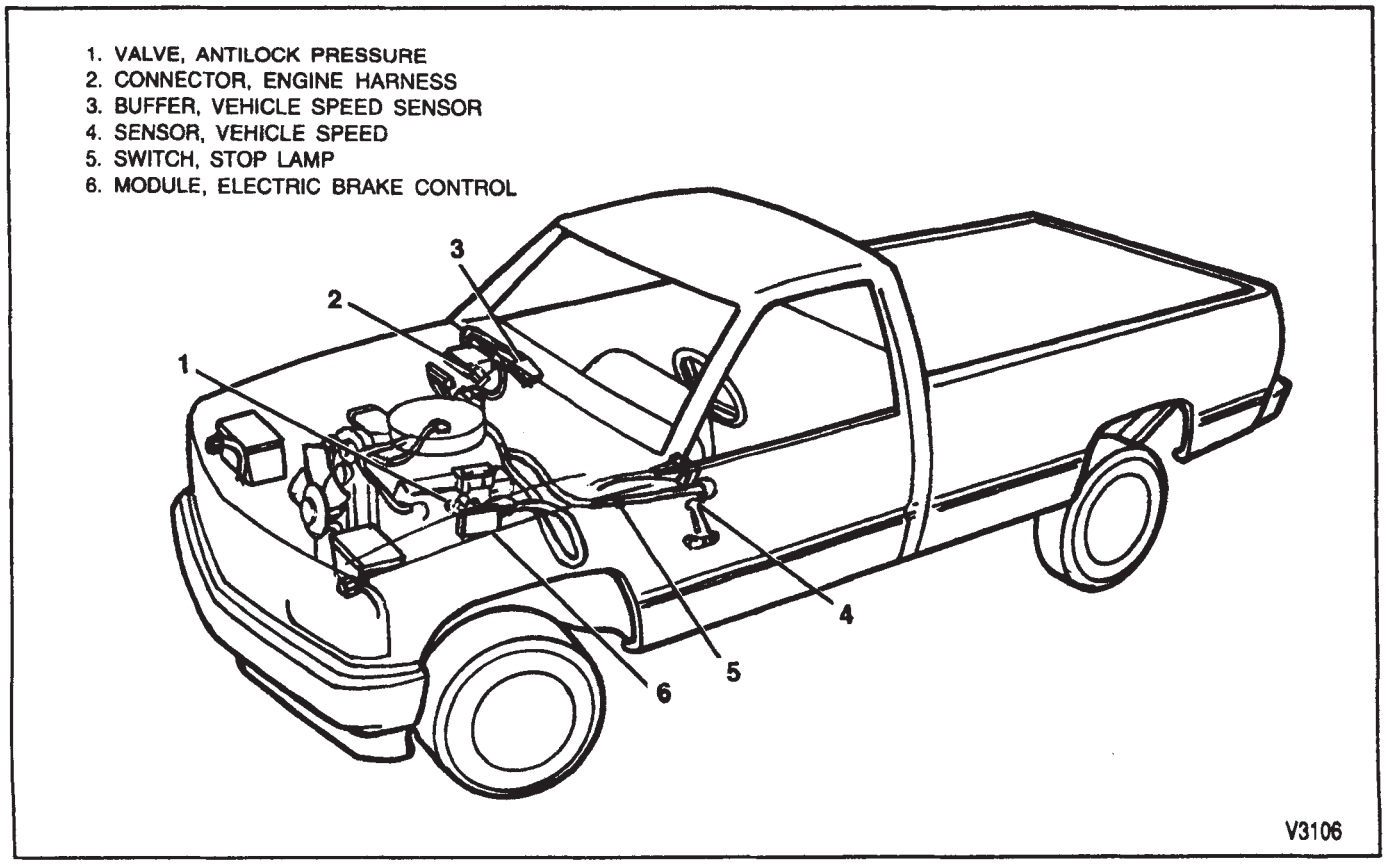

Figure 3—Component Location Views

DIAGNOSIS

DIAGNOSTIC PROCESS

Before beginning diagnosis on the RWAL system, you need a detailed description of when the condition occurred from the owner. This information can be useful in duplicating the condition. Always begin diagnosis with a visual inspection of all connectors, wiring, wire routing and retention, and system components. Many times a disconnected or loose connector, blown fuse, corroded terminal, or mis-routed wire is the cause of a malfunction.

If a visual inspection does not reveal the cause of a malfunction, perform the "Functional Test." **Always start with the Functional Test**. This is a critical step in the quick and accurate diagnosis of any malfunction. It will direct you to the specific system area that is malfunctioning and verify that the diagnostic system is functioning properly. Correct system diagnosis cannot be ensured without starting diagnosis with the Functional Test.

SELF-DIAGNOSTICS

The EBCM performs self-diagnostics and can detect and often isolate system failures. When a malfunction is detected, the EBCM sets a diagnostic trouble code (DTC) that represents the malfunction, turns on the BRAKE lamp (in most instances), and will disable RWAL functions as long as the BRAKE lamp remains on.

The EBCM performs an automatic self-test when the ignition switch is turned to the "ON" position. The EBCM cycles each valve to check component operation. If it detects an error, it sets a DTC as described above.

DISPLAYING DIAGNOSTIC TROUBLE CODES

Diagnostic trouble codes (DTCs) can be displayed using the Tech 1 scan tool or by manually grounding the data link connector (DLC) (figure 4). **MANUAL GROUNDING SHOULD ONLY BE DONE WHEN THE BRAKE LAMP IS ON.** Ground terminal "H" to terminal "A" of the DLC and count the BRAKE lamp flashes. The terminals must be grounded for about 20 seconds before the DTC will begin to flash. Count the number of short flashes starting from the long flash. Include the long flash as a count. Sometimes the first count sequence will be short. However, subsequent counts will be accurate. If a soft DTC is stored, only the last recognized DTC will be retained and displayed on the Tech 1.

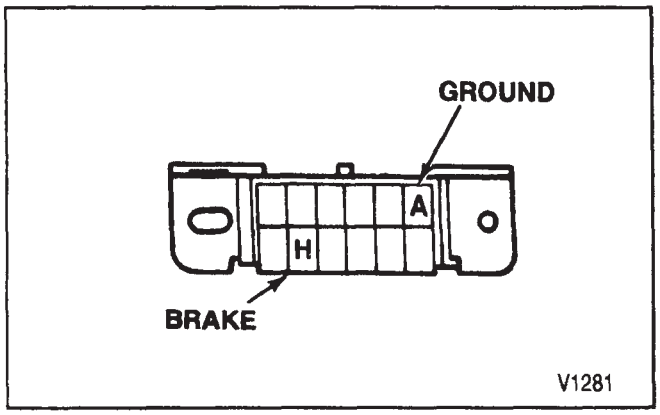

Figure 4—Data Link Connector (DLC)

NOTICE: DTCs 6, 9, and 10 will only turn the brake lamp on while the fault exists. These are soft faults and can only be read with the Tech 1 scan tool. Do not manually ground terminal "H" to terminal "A" of the DLC if the BRAKE lamp is not on. Grounding the DLC with the BRAKE lamp off will set a false DTC 9. This will turn the BRAKE lamp on and disable the antilock system.

CLEARING DIAGNOSTIC TROUBLE CODES

1. Make sure the ignition switch is "OFF."
2. Pull the ECM B fuse.
3. Wait five seconds.
4. Reinstall the fuse.
5. Verify no DTCs are stored.

INTERMITTENTS AND POOR CONNECTIONS

Most intermittent faults are caused by a faulty electrical connection or wiring, although a sticking relay or solenoid can occasionally be at fault. Refer to "Intermittents and Poor Connections" in the Electrical Diagrams and Diagnosis Manual for a detailed explanation of how to locate and repair intermittent conditions.

TECH I DIAGNOSTICS

Important

- When using the Tech 1 for RWAL system testing, make sure you are using the RWAL/4WAL cartridge that includes the model year you are working on. Refer to the RWAL/4WAL Cartridge Operator's Manual for additional information about the cartridge.

The Tech 1 has 4 test modes for diagnosis of the RWAL systems. These test modes are:

- Mode F1: Function Test
  This test mode is used to perform a functional test of the system. The Tech 1 will simulate an acceleration and deceleration signal that causes the EBCM to cycle the RWAL system. If the EBCM stores a DTC during the test, the Tech 1 will display it at the end of the test. If a DTC is set before you begin the test, the Tech 1 will display the DTC and you will not be able to continue until the DTC is cleared.
- Mode F2: Trouble Code
  This mode allows you to access DTCs and offers some diagnostic information on the DTCs.

- Mode F3: Miscellaneous Test
  This mode allows you to do specialized testing of the VSS Buffer (DRA) and Brake Switch.
- Mode F4: VSS Monitor
  This mode allows you to monitor the vehicle speed signal as the EBCM sees it.

MODE F3 - MISCELLANEOUS TEST

F0: DRA Check

This mode does not apply to any 1993 models.

F1: Brake Switch Test

This test allows you to determine if there is a malfunction in the brake switch circuit. On 4WD vehicles, this mode will also allow you to check the front axle and transfer case switched circuits.

1. Select F3: Misc. Tests from main menu.
2. Select F1: Brake Switch Test.
3. Complete the test by following the direction of each screen.

MODE F4 - VSS MONITOR

The VSS monitor mode allows you to see the speed signal as the EBCM sees it. This can help you determine if a malfunction relates to the speed signal.

1. Select F4: VSS Monitor from main menu.
2. Speed will be displayed MPH and KPH.

FUNCTIONAL TEST

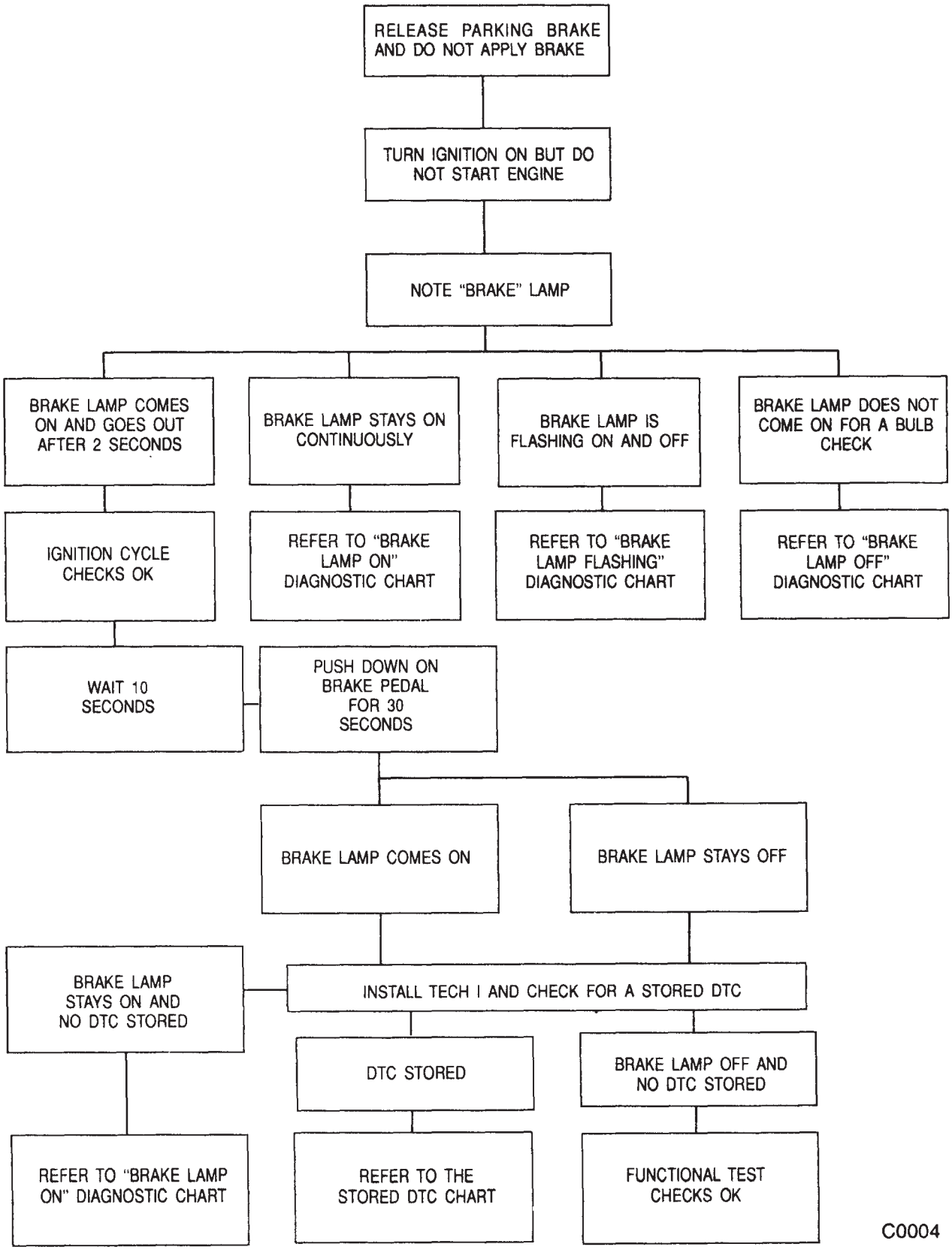

DIAGNOSTIC TROUBLE CODE AND SYMPTOM TABLE

Diagnostic Trouble Code	Description/Symptom	Page #
—	Brake Lamp On - Part 1	5E3-11
—	Brake Lamp On - Part 2	5E3-12
—	Brake Lamp On - Part 3	5E3-13
—	Intermittent Brake Lamp	5E3-14
—	Brake Lamp Flashing	5E3-15
—	Brake Lamp Off	5E3-16
2	Open Isolation Solenoid or EBCM Malfunction	5E3-18
3	Open Dump Solenoid or EBCM Malfunction	5E3-20
4	Grounded Antilock Pressure Valve Reset Switch	5E3-22
5	Excessive Dump Valve Actuations During an Antilock Stop	5E3-24
6	Erratic Speed Signal	5E3-26
7	Shorted Isolation Solenoid or EBCM Malfunction	5E3-28
8	Shorted Dump Solenoid or EBCM Malfunction	5E3-30
9	Open or Grounded Speed Signal Circuit	5E3-32
10	Brake Switch Circuit	5E3-34
1, 11, 12	Invalid Diagnostic Trouble Codes	5E3-36
13, 14, 15	Electric Brake Control Module Malfunction	5E3-38

T2982

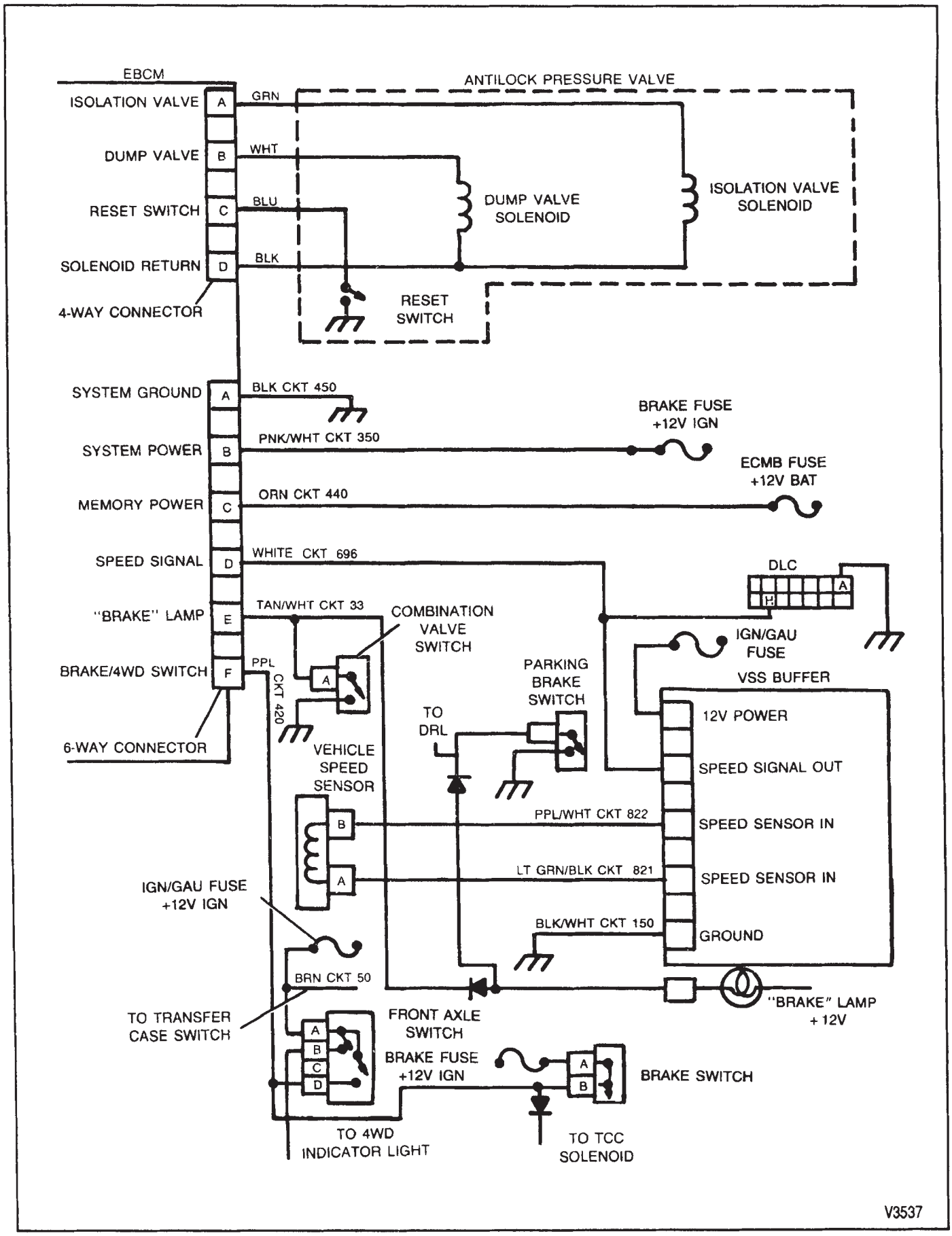

Figure 5—Wiring Diagram

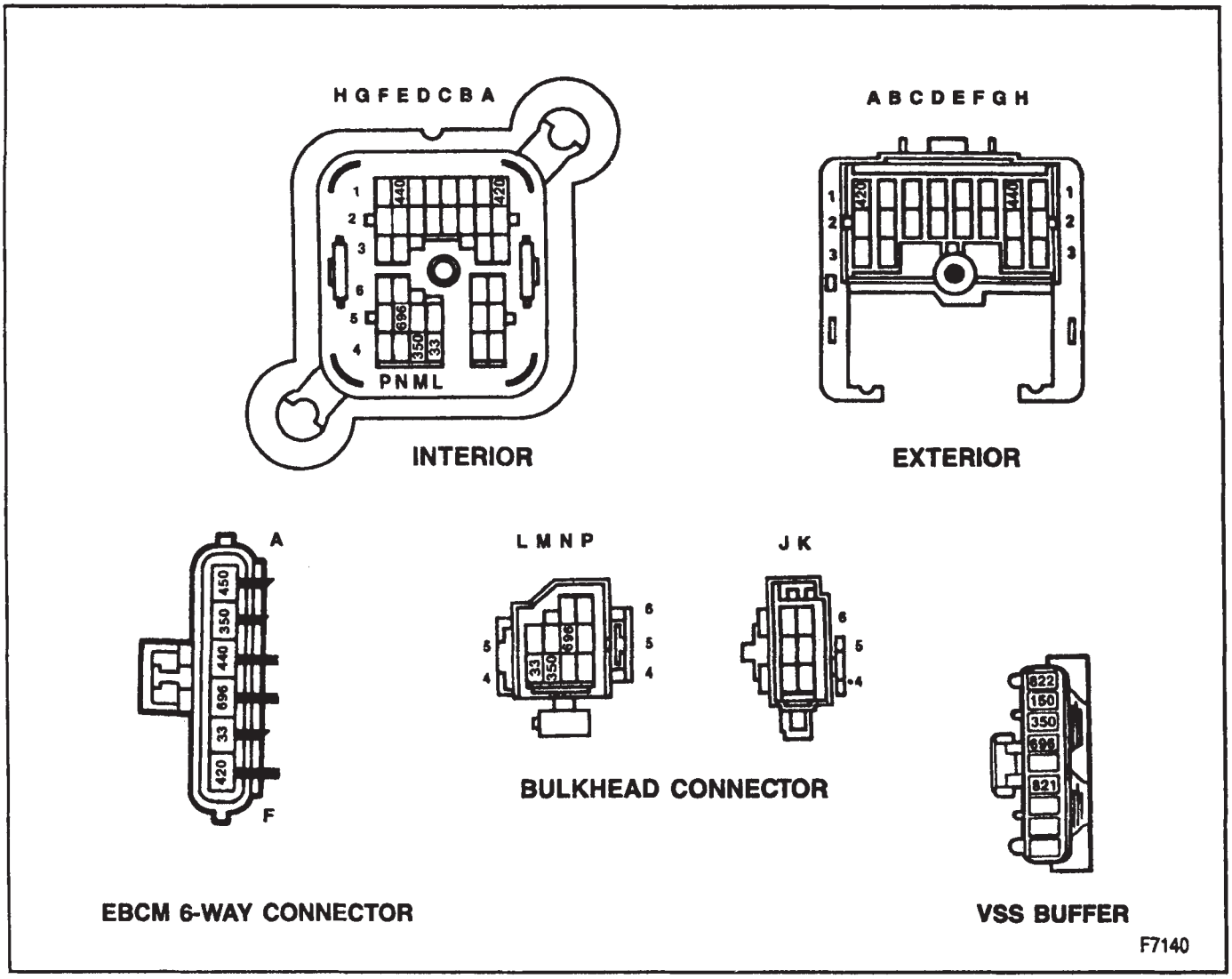

Figure 6—Connector Face Views

BRAKE LAMP ON—PART 1

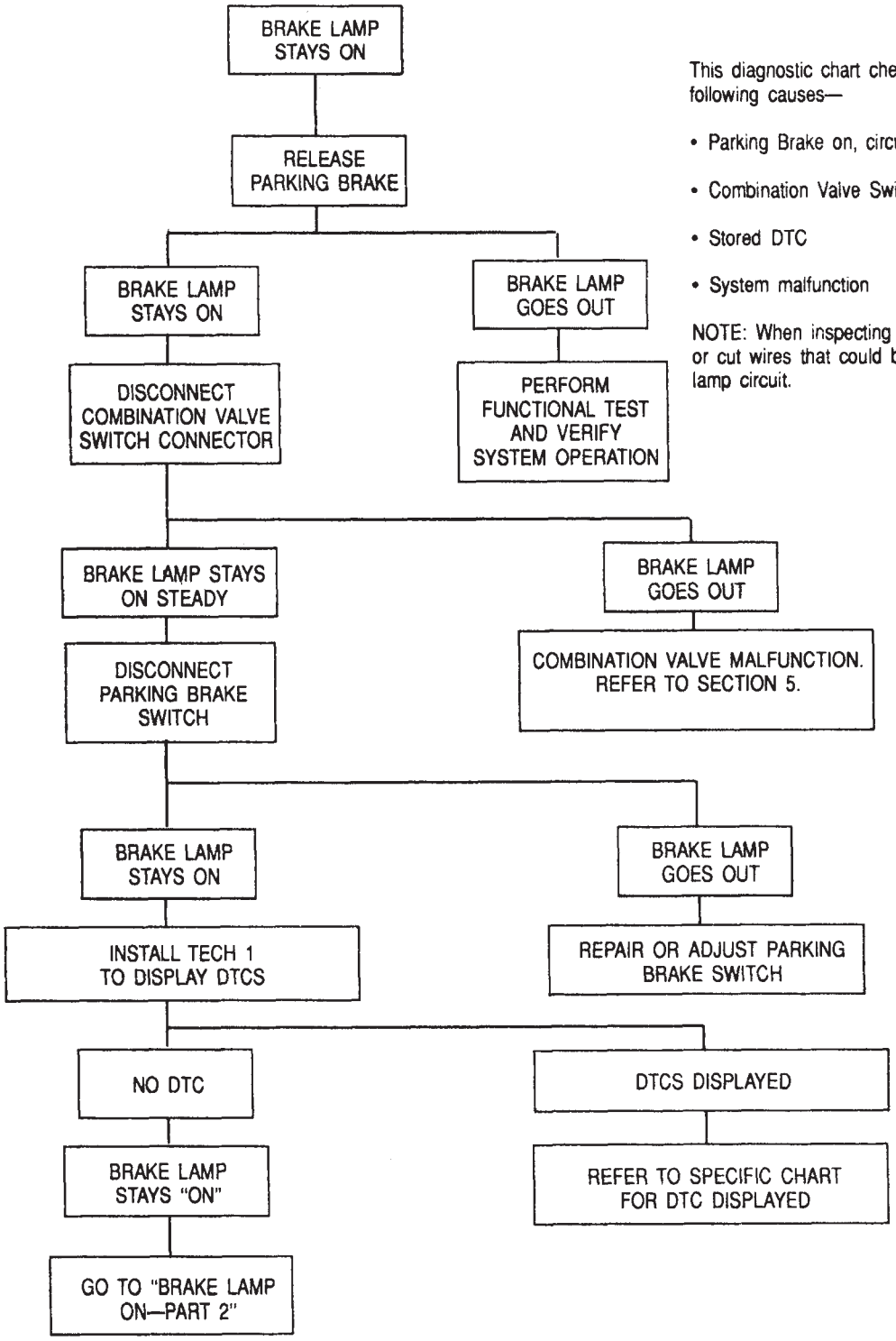

This diagnostic chart checks for the following causes—

- Parking Brake on, circuit, or switch problem
- Combination Valve Switch closed
- Stored DTC
- System malfunction

NOTE: When inspecting circuit, check for chafed or cut wires that could be grounding the brake lamp circuit.

C0123

BRAKE LAMP ON—PART 2

This diagnostic chart checks for the following cause:

- No speed signal voltage to EBCM
- System or wiring problem
- EBCM malfunction

NOTE: If voltage readings are low or varying, check the battery and charging system or check for intermittent connections.

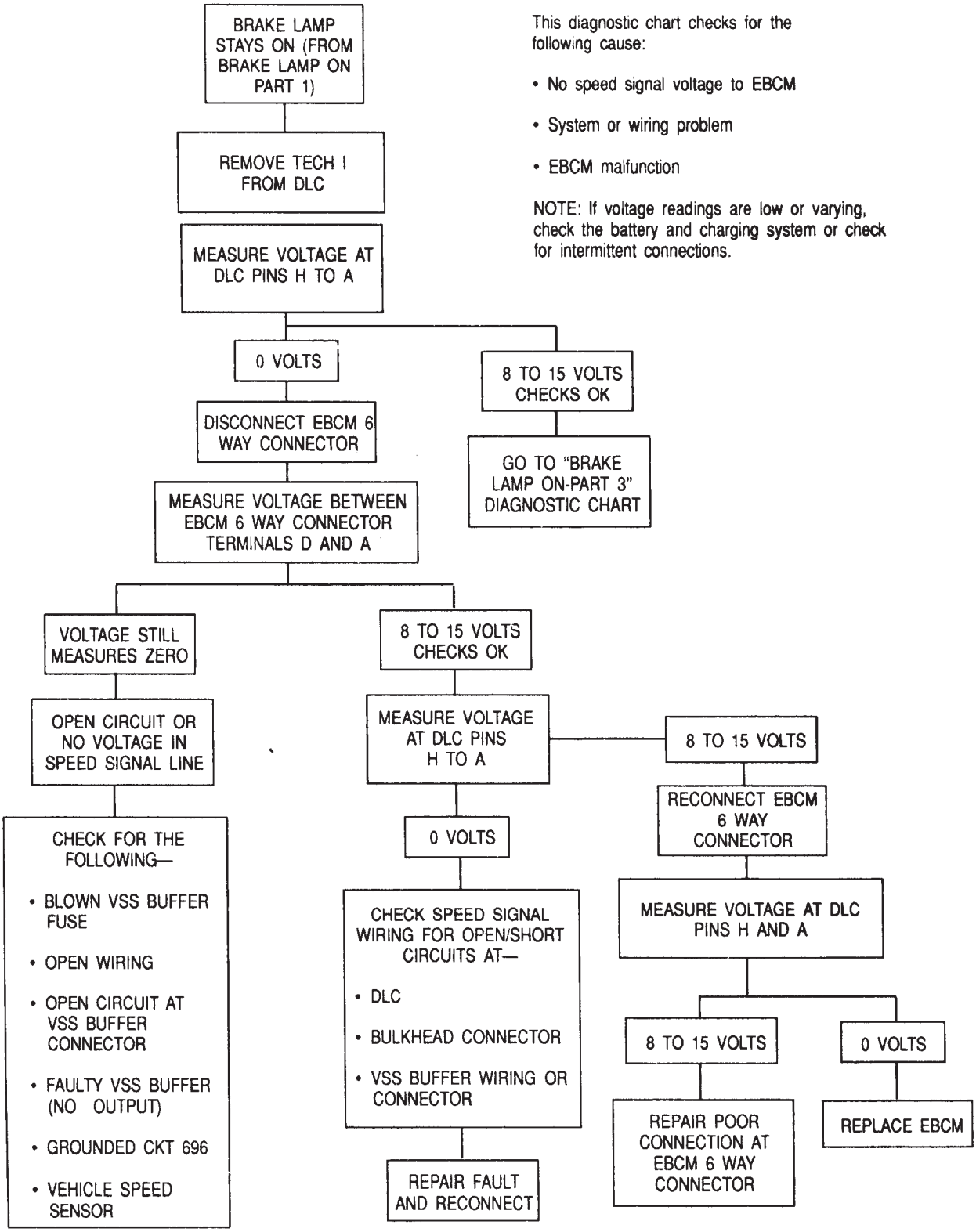

C0124

BRAKE LAMP ON—PART 3

This diagnostic chart checks for the following causes—

- No Power to VSS Buffer
- No Battery voltage feed to EBCM
- No Ignition voltage feed to EBCM
- EBCM malfunction

NOTE: The RWAL system is designed to turn the Brake lamp on if the ignition is on and there is no battery or ignition voltage feed to the EBCM

NOTE: If voltage readings are low or varying, check battery and charging system or check for intermittent connections

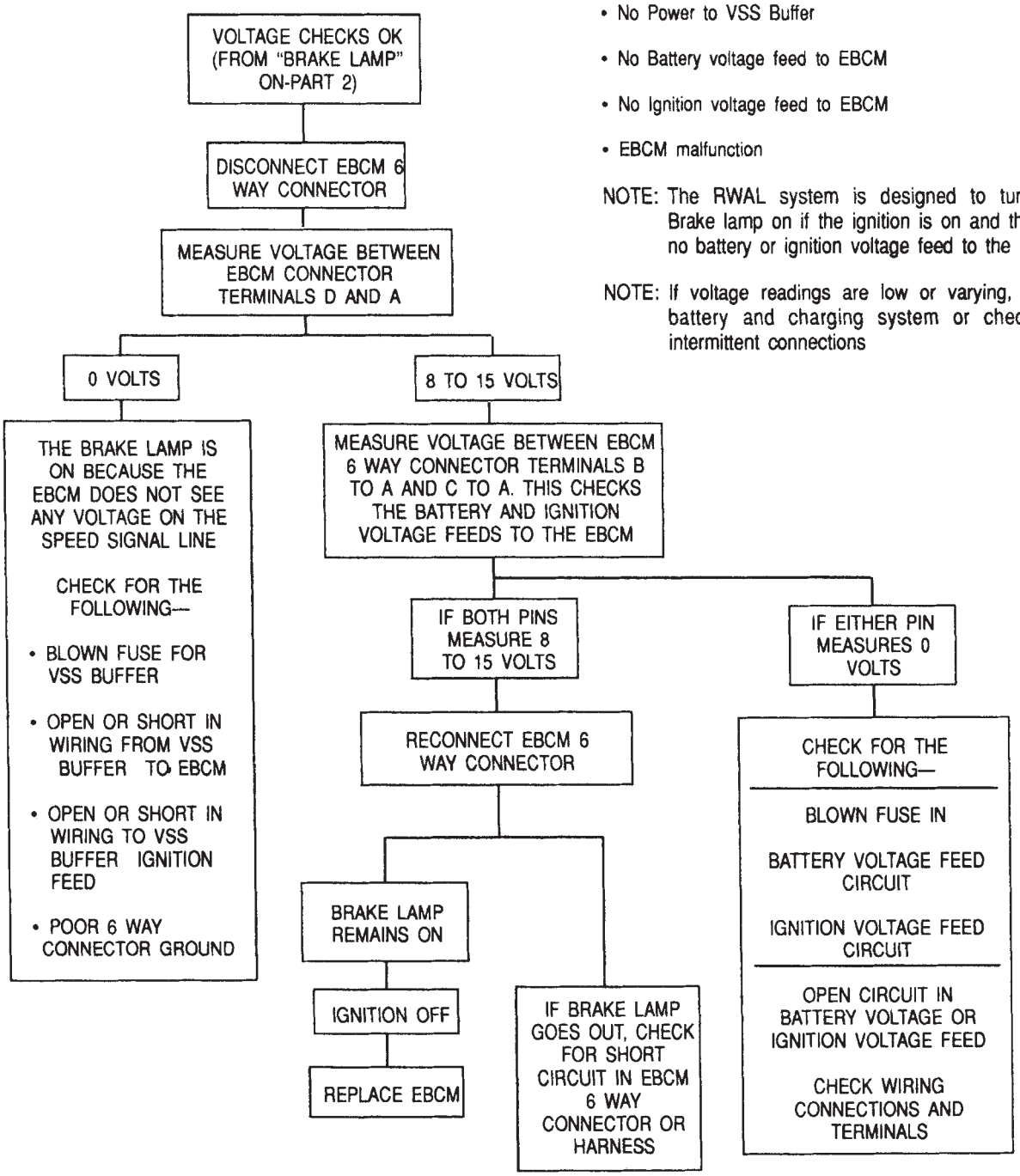

C0125

INTERMITTENT BRAKE LAMP

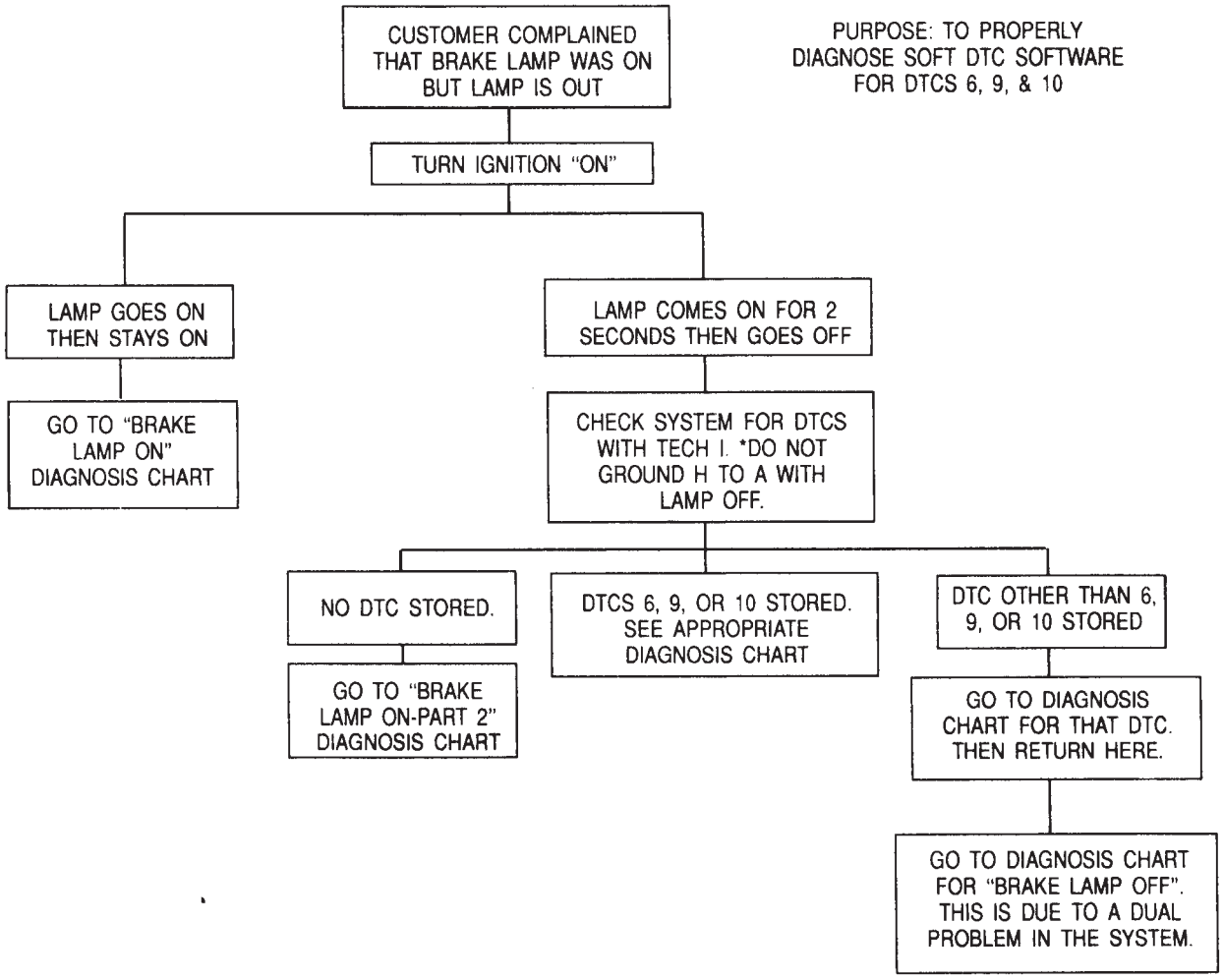

*DO NOT ATTEMPT TO GROUND H TO A WHEN LAMP IS OFF. RESULT WILL BE A FALSE DTC 9 STORED.

•SOFT DTCS 6, 9, & 10 HAVE BEEN INTRODUCED DUE TO INTERMITTENT CONNECTIONS. IF THE PROBLEM GOES AWAY THE DTC WILL BE STORED TO AID IN DIAGNOSTICS. HOWEVER THE LAMP WILL BE TURNED OFF WITH DTCS 6 & 9 AT THE NEXT IGNITION CYCLE AND LAMP WILL BE TURNED OFF WITH DTC 10 WHEN THE EBCM SEES 12 VOLTS FROM THE STOP LAMP SWITCH.

C0135

BRAKE LAMP FLASHING

THIS DIAGNOSTIC CHART CHECKS FOR THE FOLLOWING CAUSES:

- INTERMITTENT SPEED SIGNAL VOLTAGE TO THE EBCM
- SYSTEM MALFUNCTION (STORED DTC)

NOTE: IF VOLTAGE READINGS ARE TOO LOW OR VARYING, CHECK BATTERY AND CHARGING SYSTEM OR CHECK FOR INTERMITTENT CONNECTIONS.

NOTE: DTC MAY BE FLASHED OUT UNDER UNUSUAL CIRCUMSTANCES.

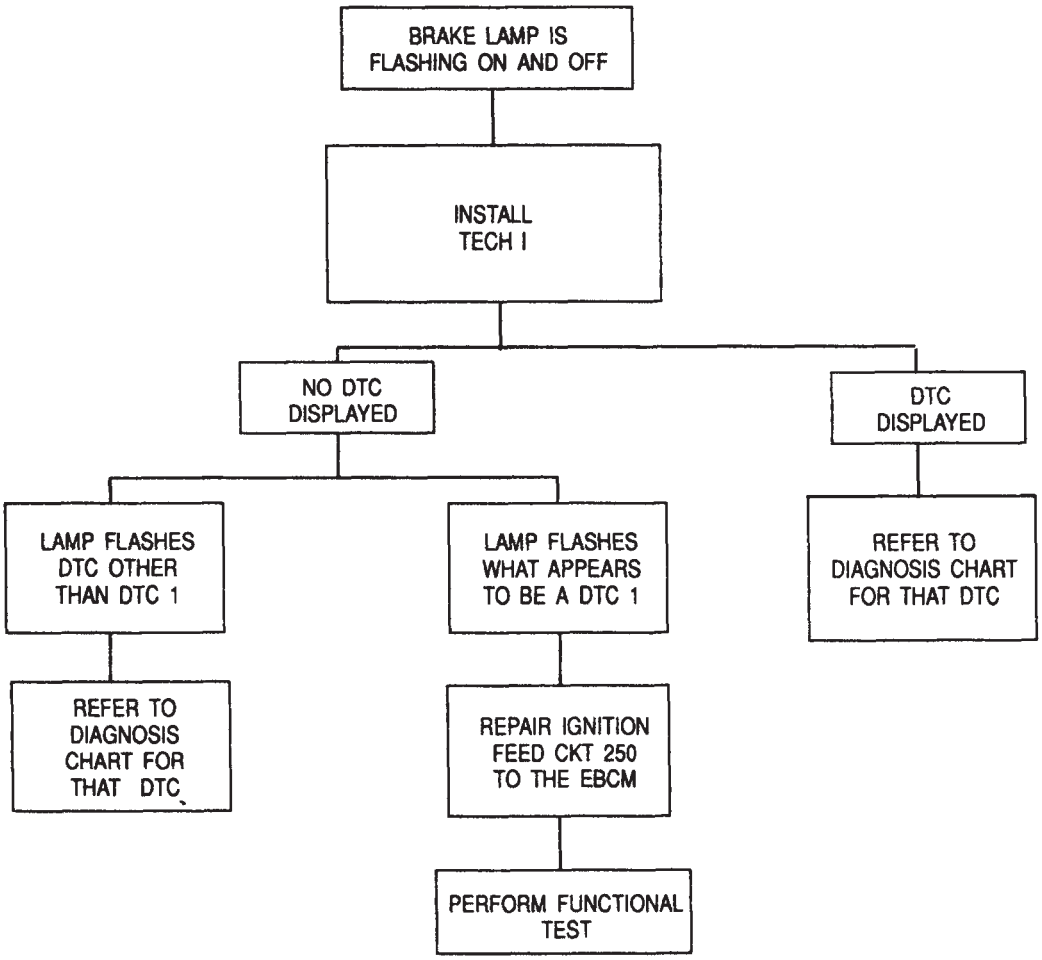

C0026

BRAKE LAMP OFF

The EBCM should perform a Brake lamp check at ignition on. The EBCM turns on the Brake lamp for 2 seconds after the ignition is turned on. The Brake lamp going out after 2 seconds also indicates that the EBCM ignition cycle checked ok.

NOTE: Operate the parking brake to check the "BRAKE" lamp circuit. The lamp should come on when the parking brake pedal is applied.

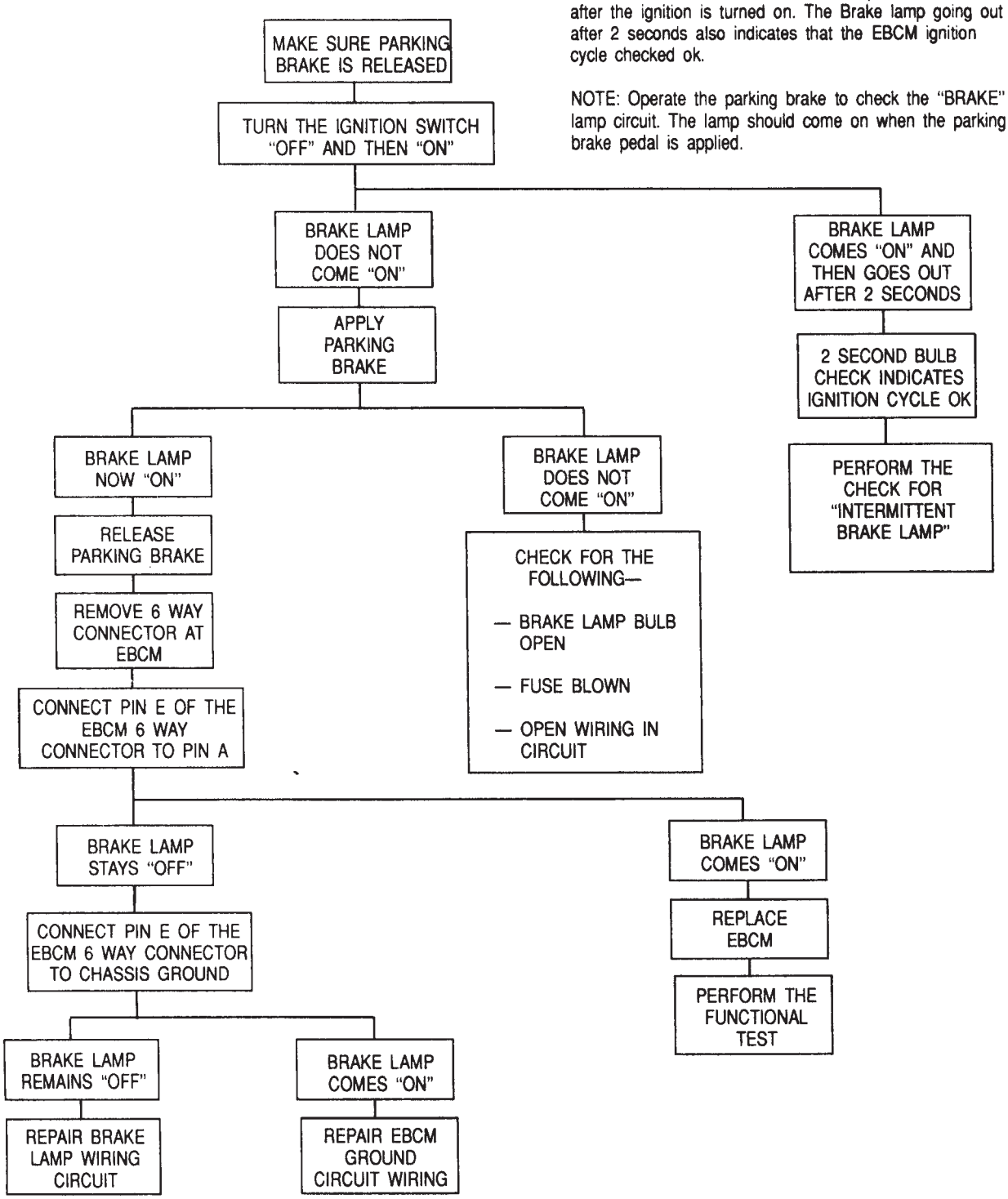

C0126

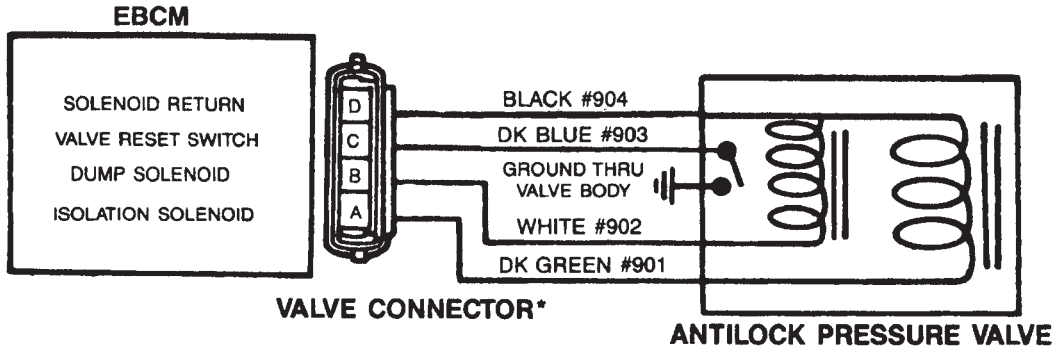

*** NOTICE: DO NOT PIERCE CONNECTOR, OR WIRES. THIS WILL BREAK THE SEAL AND COULD LEAD TO A POOR CONNECTION**

V1282

DIAGNOSTIC TROUBLE CODE 2 OPEN ISOLATION SOLENOID OR EBCM MALFUNCTION

CIRCUIT DESCRIPTION:

A DTC 2 relates to an open in the APV isolation valve circuit. The EBCM uses the isolation valve to maintain and increase pressure in the brake pipes during an antilock stop. An open in the solenoid winding or circuit prevents the EBCM from controlling the rear wheels when a speed decrease is detected.

TEST DESCRIPTION:

- Check for continuity through the isolation solenoid winding.
- Check for a consistent DTC being set after clearing the memory.
- Check for corrosion or poor contact in the solenoid electrical terminals.
- Check the resistance of the solenoid after the terminal repair to see if it corrected the open condition.

DIAGNOSTIC AIDS:

A DTC 2 will set if the 4-way connector is disconnected and the ignition switch is turned on or the 6-way connector is plugged in before the 4-way connector with the ignition switch on.

Do not pierce the electrical connectors, wires, seals, or insulation during testing. Doing so will break the seal and lead to corrosion and failure of the wiring and terminals.

DTC 2
OPEN ISOLATION SOLENOID OR EBCM MALFUNCTION

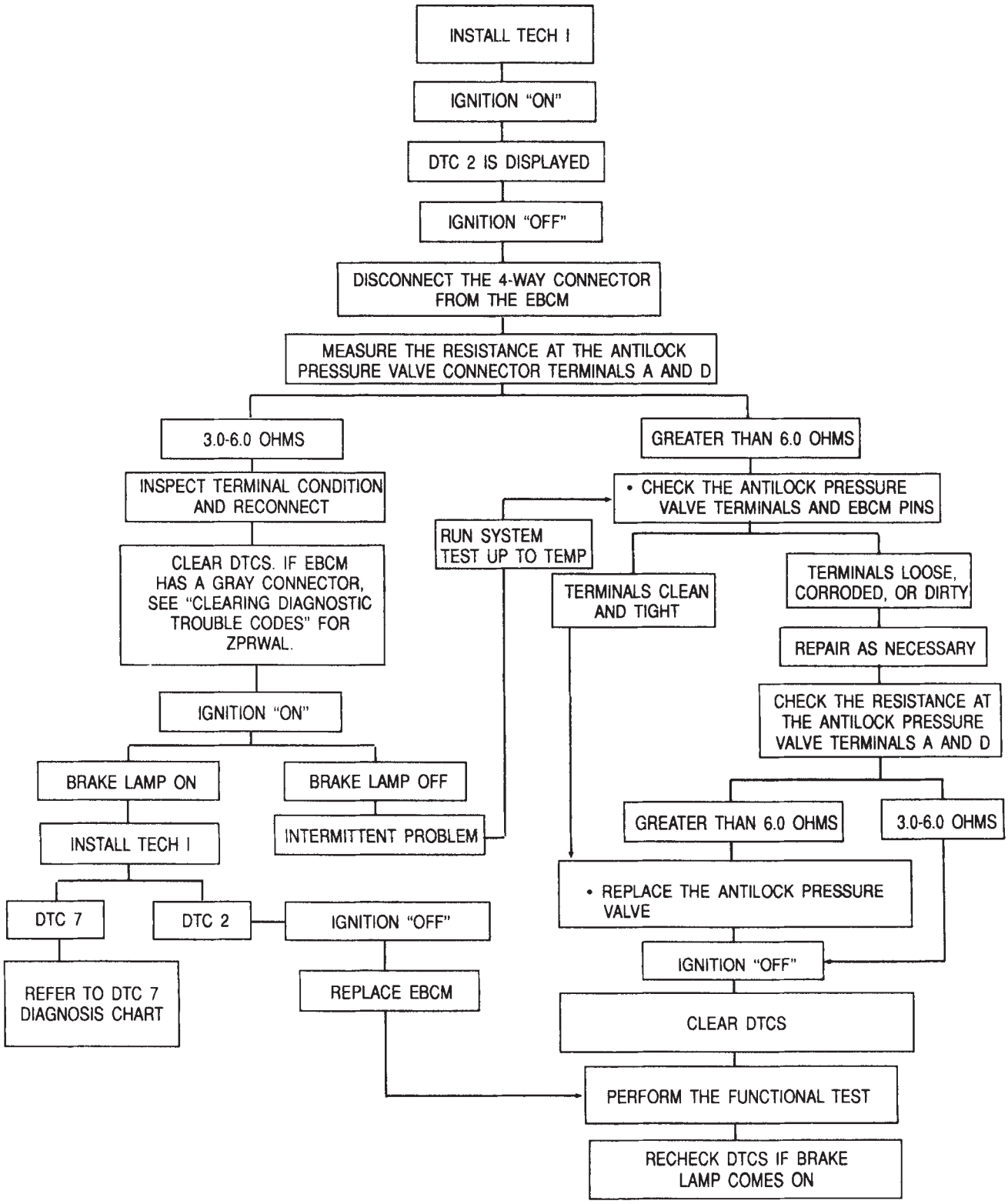

C0127

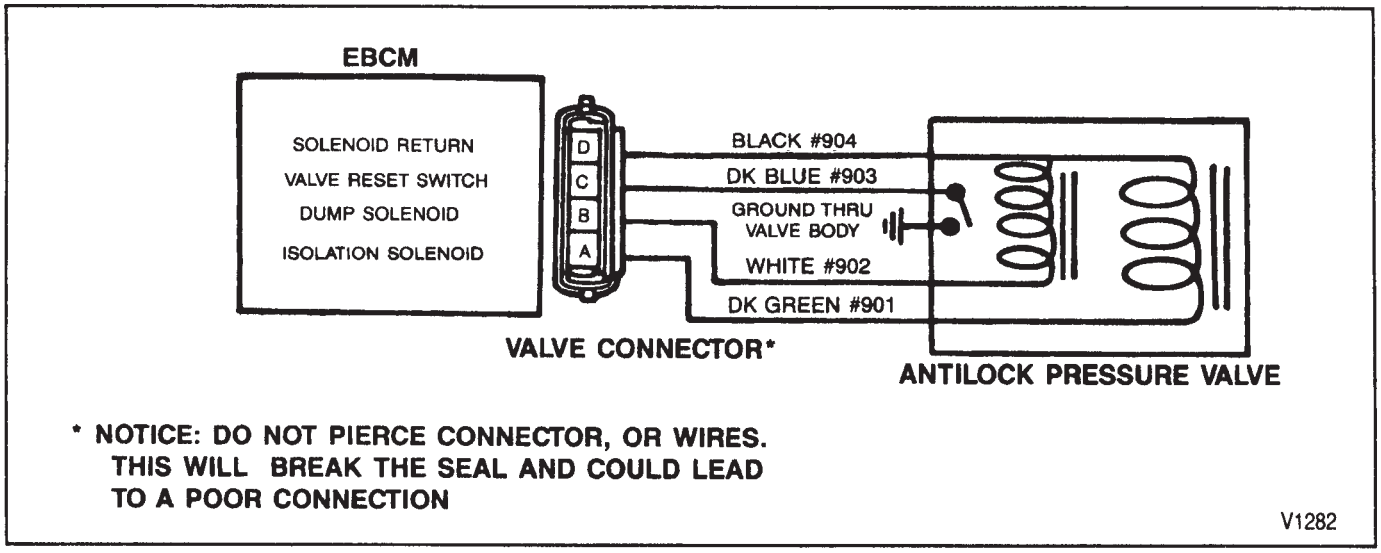

DIAGNOSTIC TROUBLE CODE 3
OPEN DUMP SOLENOID OR EBCM MALFUNCTION

CIRCUIT DESCRIPTION:

A DTC 3 relates to an open in the APV dump valve circuit. The EBCM uses the dump valve to reduce fluid pressure in the brake lines when it senses the wheel is locking up. The fluid pressure is routed to an accumulator. An open dump solenoid prevents the EBCM from reducing the pressure and the wheel will continue to lock up.

TEST DESCRIPTION:

- Check for continuity through the dump solenoid winding.
- Check for a consistent DTC being set after clearing the memory.
- Check for corrosion or poor contact in the solenoid electrical terminals.
- Check the resistance of the solenoid after the terminal repair to see if it corrected the open condition.

DIAGNOSTIC AIDS:

Do not pierce the electrical connectors, wires, seals, or insulation during testing. Doing so will break the seal and lead to corrosion and failure of the wiring and terminals.

DTC 3
OPEN DUMP SOLENOID OR EBCM MALFUNCTION

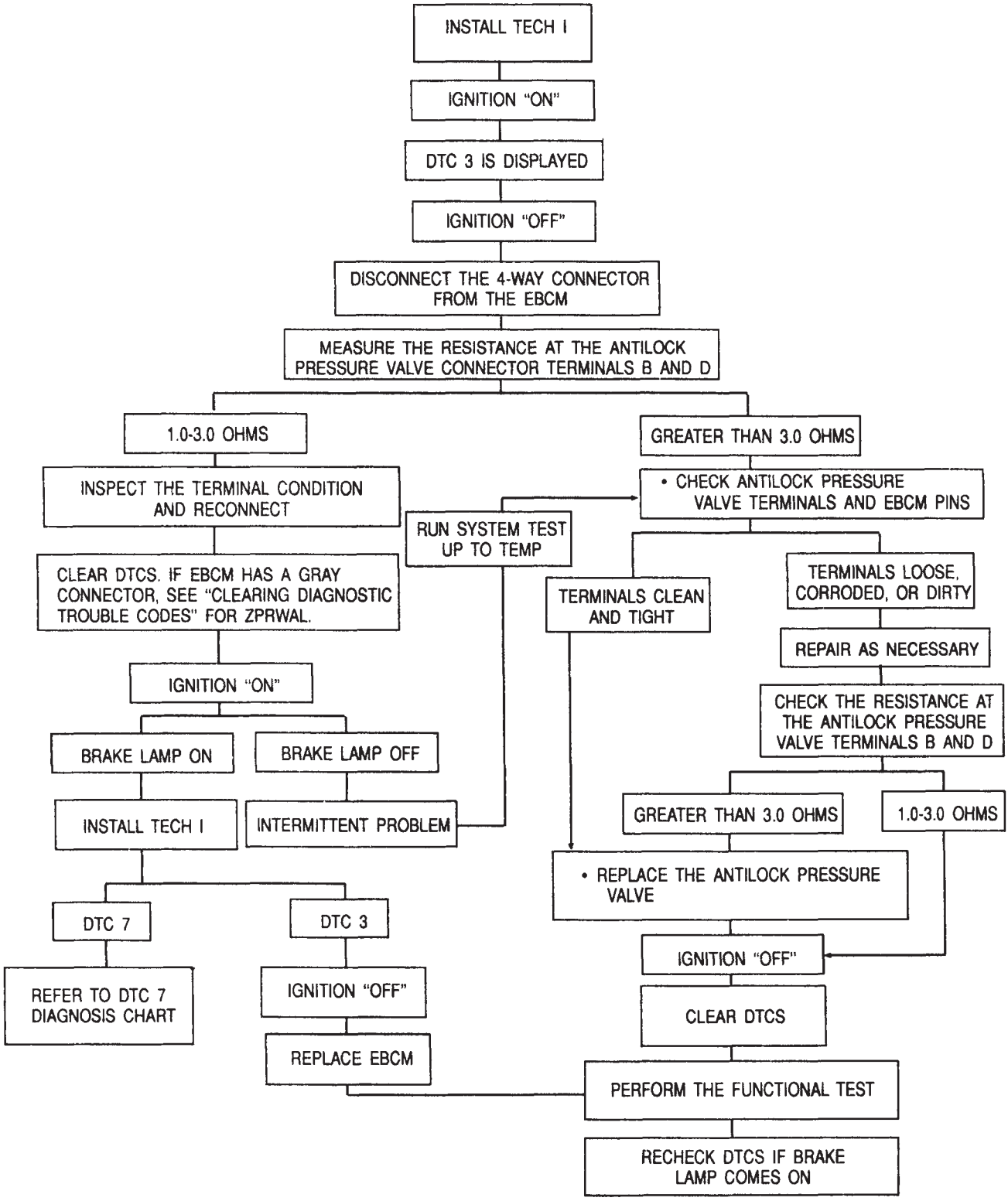

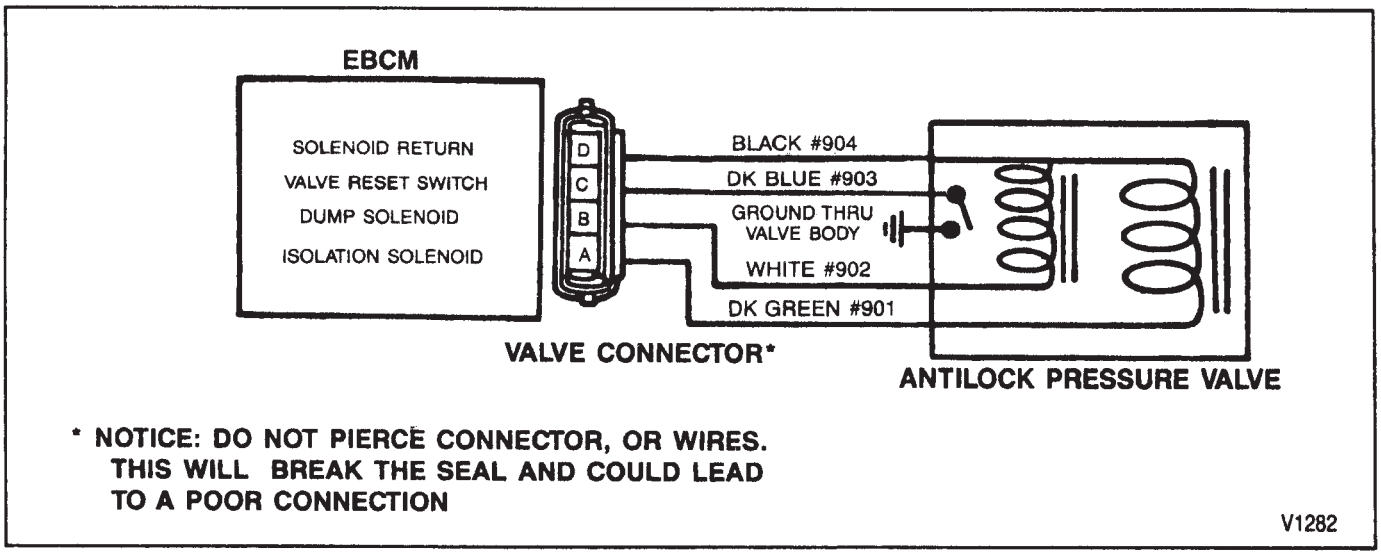

DIAGNOSTIC TROUBLE CODE 4 GROUNDED ANTILOCK PRESSURE VALVE RESET SWITCH

CIRCUIT DESCRIPTION:

A DTC 4 relates to a grounded condition in the APV reset switch. The reset switch grounds pin C of the EBCM 4-way connector when there is a great enough difference between inlet and outlet pressure in the antilock pressure valve. An example of this is during a pressure decrease operation. With a grounded reset switch, the EBCM has no way of determining if pressure changes are occurring in the antilock pressure valve. The reset switch is constantly signaling that pressure decrease has occurred.

TEST DESCRIPTION:

- Clear the DTCs in the EBCM memory.
- Check the voltage signal to the reset switch to see if the EBCM is operational.

DIAGNOSTIC AIDS:

Do not pierce the electrical connectors, wires, seals, or insulation during testing. Doing so will break the seal and lead to corrosion and failure of the wiring and terminals.

DTC 4
GROUNDED ANTILOCK PRESSURE VALVE RESET SWITCH

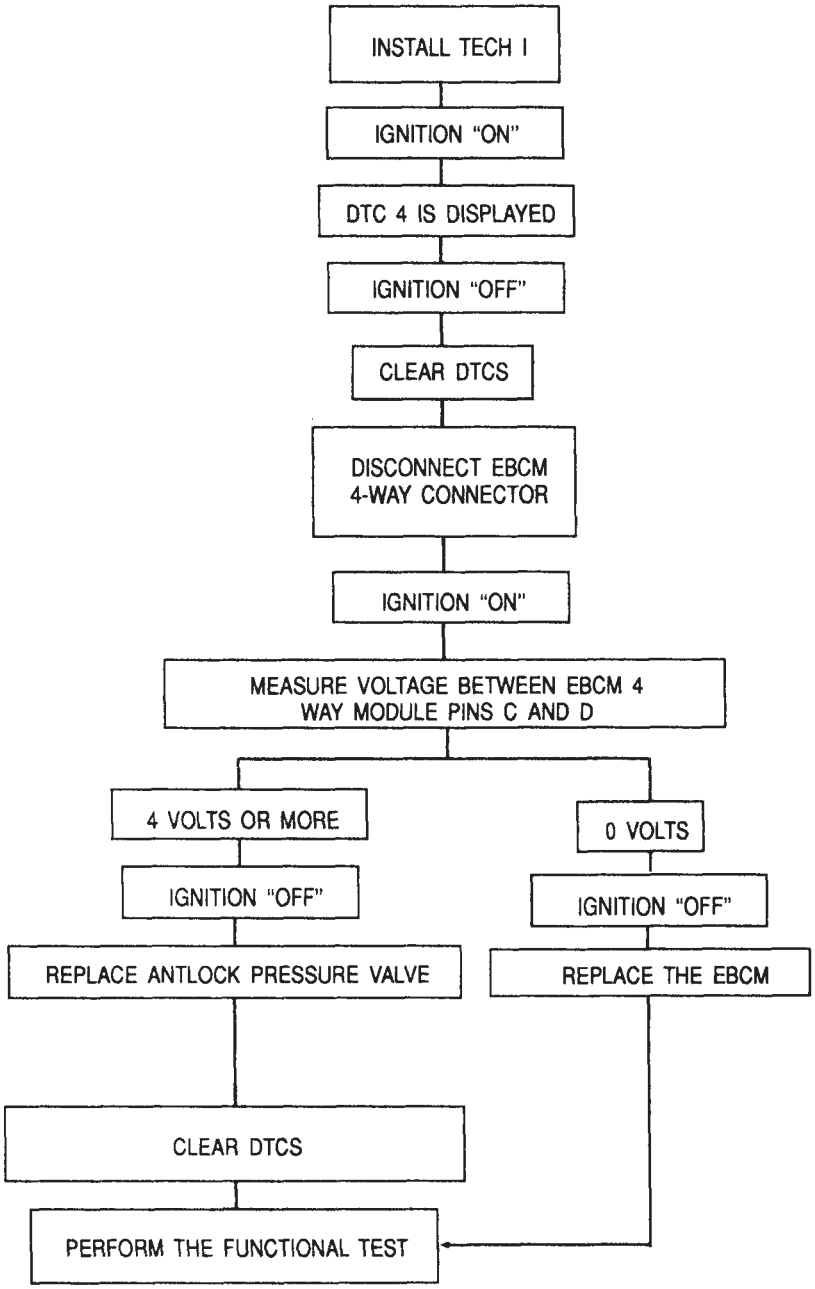

C0129

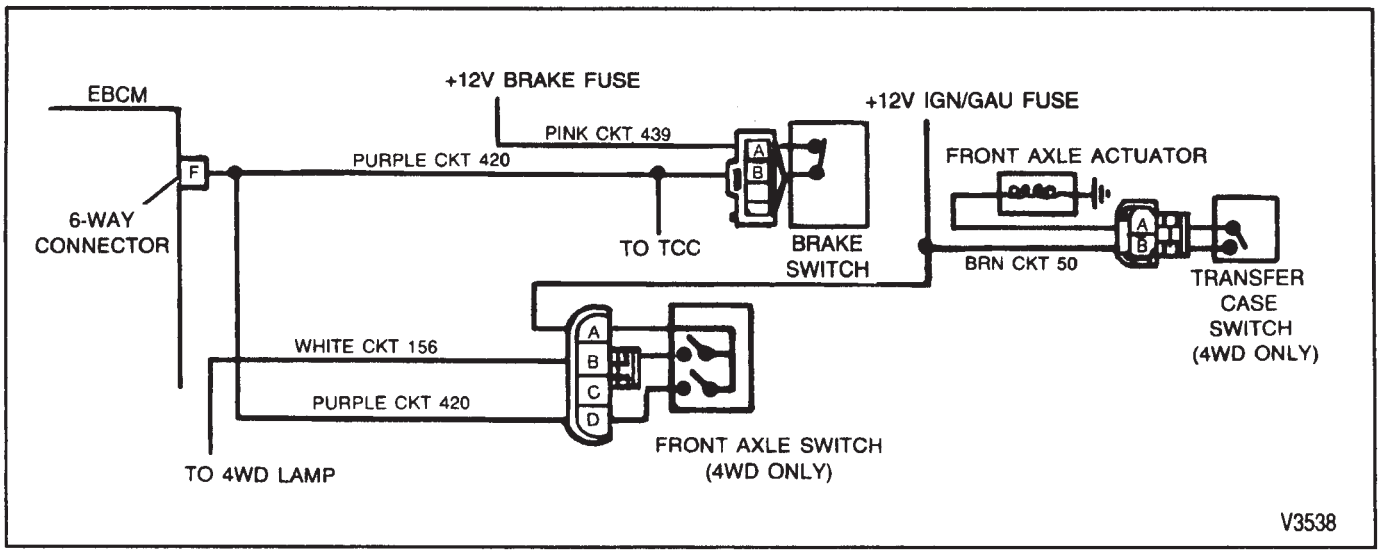

DIAGNOSTIC TROUBLE CODE 5 EXCESSIVE DUMP VALVE ACTUATIONS DURING AN ANTILOCK STOP

CIRCUIT DESCRIPTION:

A DTC 5 relates to a condition where the EBCM is having to cycle the dump valve too many times during an antilock stop. A mechanical locking condition in the rear brakes or powertrain can cause this DTC to set. This DTC can also be set if the RWAL system is working with the vehicle in 4WD.

TEST DESCRIPTION:

- Check if the rear brakes or powertrain are causing the malfunction.
- This test only applies to vehicles with 4WD. Check if the front axle switch can turn on the 4WD indicator on the instrument cluster.
- Check if the voltage is present in CKT 420.
- Check the operation of the front axle switch.
- Check for the 4WD voltage signal at the EBCM.

DIAGNOSTIC AIDS:

Do not pierce the electrical connectors, wires, seals, or insulation during testing. Doing so will break the seal and lead to corrosion and failure of the wiring and terminals.

DTC 5
EXCESSIVE DUMP VALVE ACTUATIONS DURING AN ANTILOCK STOP

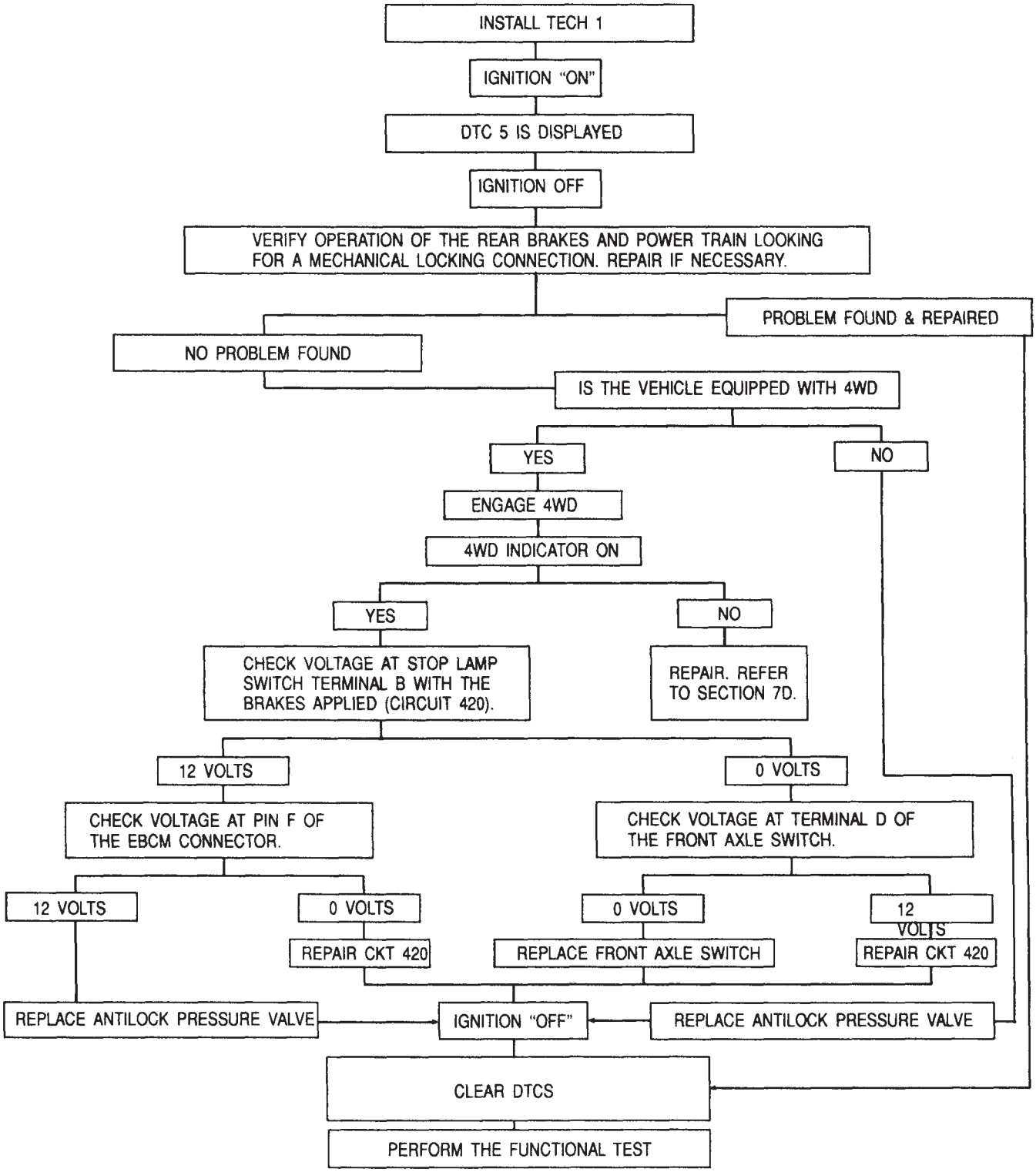

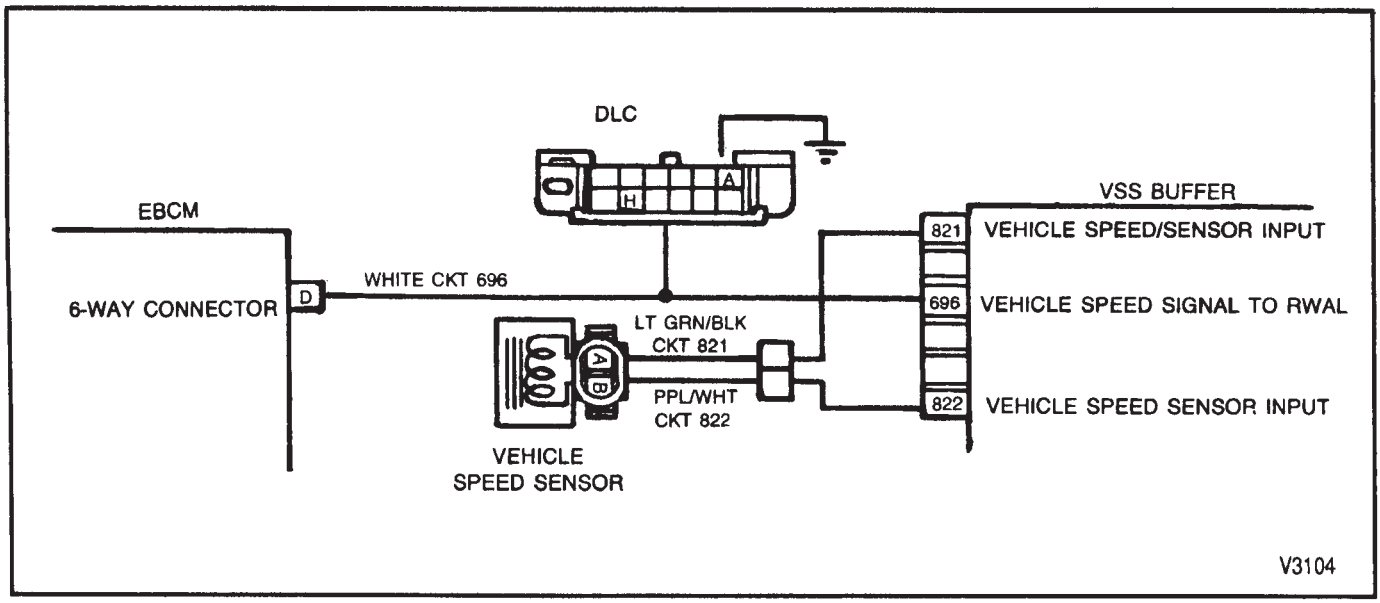

DIAGNOSTIC TROUBLE CODE 6
ERRATIC SPEED SIGNAL

CIRCUIT DESCRIPTION:

A DTC 6 is a soft fault. If the speed signal line to the EBCM drops out and returns often, this DTC is set in memory. The BRAKE lamp will illuminate when the DTC is set and turn off with the next ignition cycle. **Do not replace the EBCM to repair this DTC.** An erratic speed signal relates to a malfunction in either the VSS, VSS buffer, or speed signal circuit. It can be set by a poor connection in the speed signal line.

TEST DESCRIPTION:

- Check if all systems are receiving an erratic speed signal or if it is just the RWAL system.
- Check the VSS output using the Tech 1.
- Check the resistance of the VSS.
- Check for an open condition in CKT 822.
- Check for excessive resistance in CKT 696.

DIAGNOSTIC AIDS:

Do not replace the EBCM for this DTC. An EBCM malfunction will not cause this DTC to set.

If the voltage readings are low or varying, the battery, charging system, or intermittent connections could be the cause. Check these areas before replacing any components.

This DTC is a soft fault and can be set with a 2WD transmission on ice wheel spins.

If the BRAKE lamp is not on, do not ground DLC terminals H to A. Doing so will set a false DTC 9.

Do not pierce the electrical connectors, wires, seals, or insulation during testing. Doing so will break the seal and lead to corrosion and failure of the wiring and terminals.

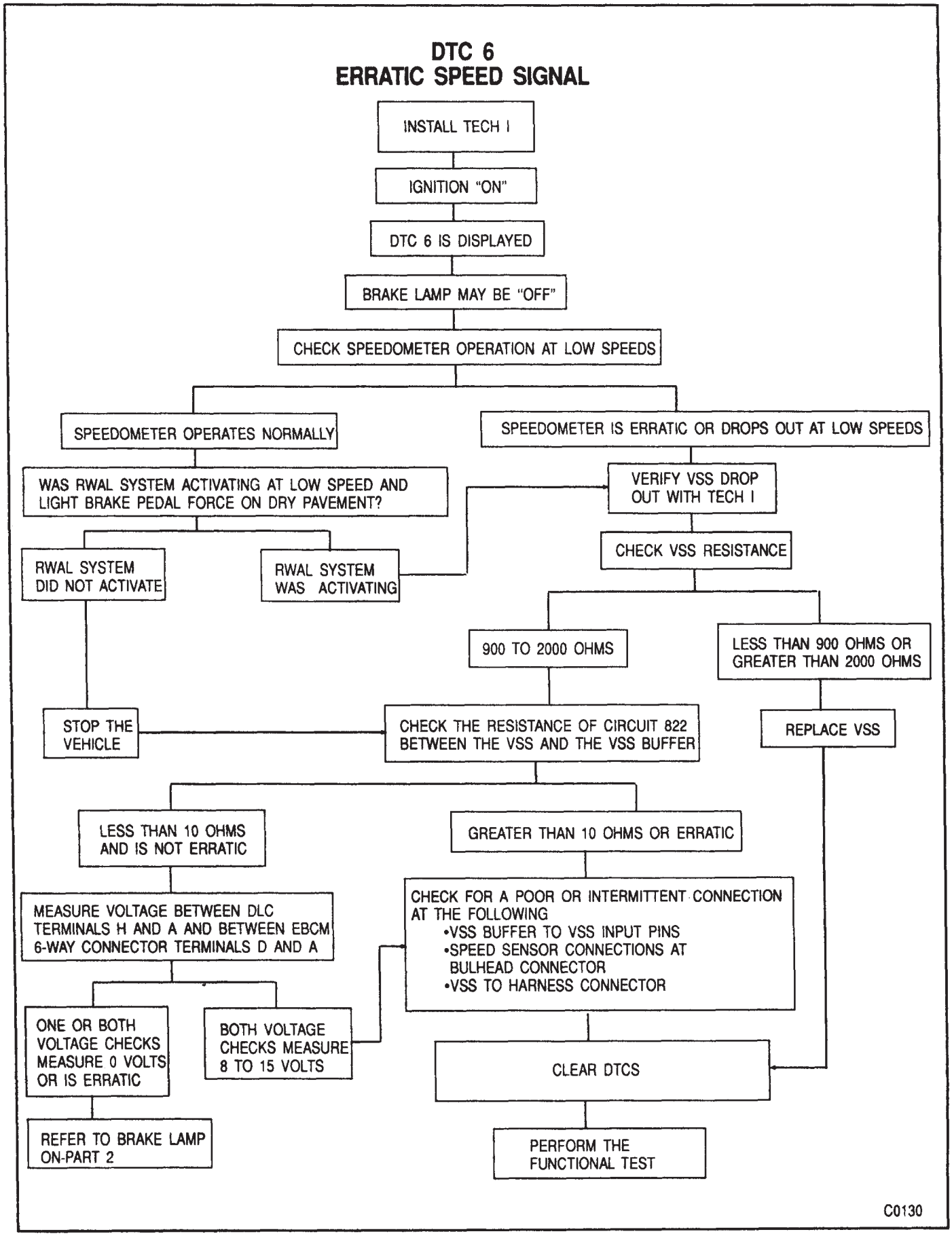
DTC 6
ERRATIC SPEED SIGNAL
INSTALL TECH I
IGNITION "ON"
DTC 6 IS DISPLAYED
BRAKE LAMP MAY BE "OFF"
CHECK SPEEDOMETER OPERATION AT LOW SPEEDS
SPEEDOMETER OPERATES NORMALLY
SPEEDOMETER IS ERRATIC OR DROPS OUT AT LOW SPEEDS
WAS RWAL SYSTEM ACTIVATING AT LOW SPEED AND LIGHT BRAKE PEDAL FORCE ON DRY PAVEMENT?
VERIFY VSS DROP OUT WITH TECH I
RWAL SYSTEM DID NOT ACTIVATE
RWAL SYSTEM WAS ACTIVATING
CHECK VSS RESISTANCE
900 TO 2000 OHMS
LESS THAN 900 OHMS OR GREATER THAN 2000 OHMS
STOP THE VEHICLE
CHECK THE RESISTANCE OF CIRCUIT 822 BETWEEN THE VSS AND THE VSS BUFFER
REPLACE VSS
LESS THAN 10 OHMS AND IS NOT ERRATIC
GREATER THAN 10 OHMS OR ERRATIC
MEASURE VOLTAGE BETWEEN DLC TERMINALS H AND A AND BETWEEN EBCM 6-WAY CONNECTOR TERMINALS D AND A
CHECK FOR A POOR OR INTERMITTENT CONNECTION AT THE FOLLOWING
•VSS BUFFER TO VSS INPUT PINS
•SPEED SENSOR CONNECTIONS AT BULHEAD CONNECTOR
•VSS TO HARNESS CONNECTOR
ONE OR BOTH VOLTAGE CHECKS MEASURE 0 VOLTS OR IS ERRATIC
BOTH VOLTAGE CHECKS MEASURE 8 TO 15 VOLTS
CLEAR DTCS
REFER TO BRAKE LAMP ON-PART 2
PERFORM THE FUNCTIONAL TEST
C0130

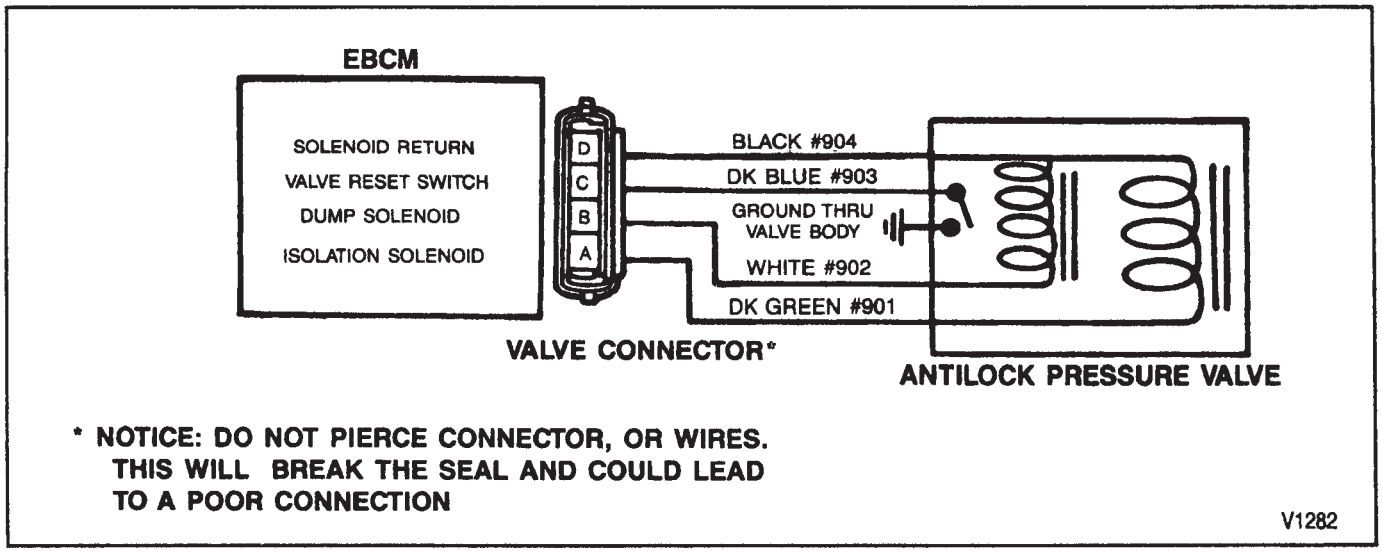

DIAGNOSTIC TROUBLE CODE 7 SHORTED ISOLATION SOLENOID OR EBCM MALFUNCTION

CIRCUIT DESCRIPTION:

A DTC 7 sets when the EBCM detects a short in the isolation valve solenoid or circuit. With the isolation valve shorted the EBCM cannot provide any of the pressure control functions. The short can be located in the APV, EBCM, or circuit between them.

TEST DESCRIPTION:

- Check the EBCM's internal circuitry for the isolation valve solenoid.
- Check the resistance of the isolation solenoid winding.
- Check if the connector repair corrected the condition.
- Check for a short to ground in the APV.

DIAGNOSTIC AIDS:

Do not pierce the electrical connectors, wires, seals, or insulation during testing. Doing so will break the seal and lead to corrosion and failure of the wiring and terminals.

DTC 7
SHORTED ISOLATION SOLENOID OR EBCM MALFUNCTION

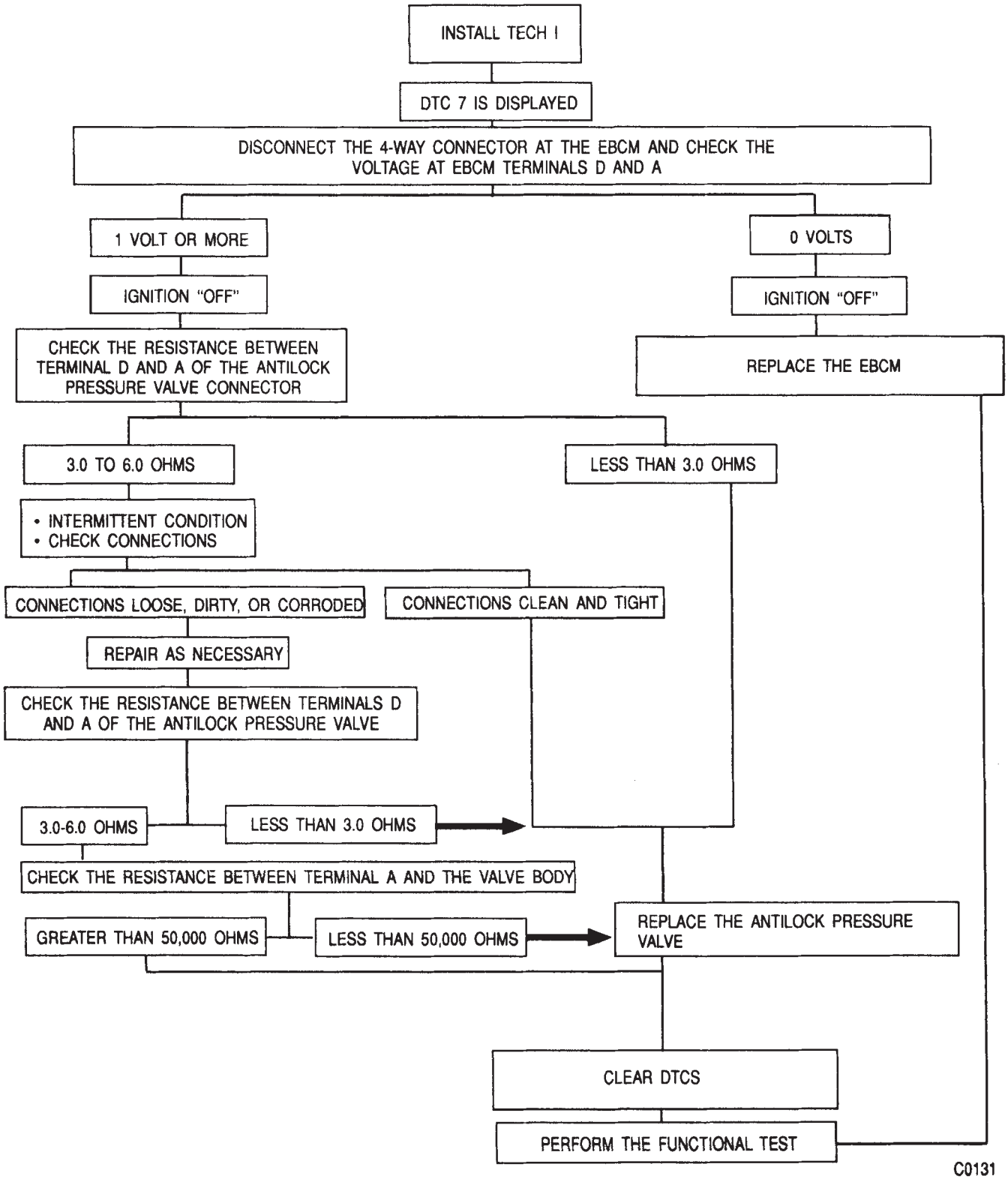

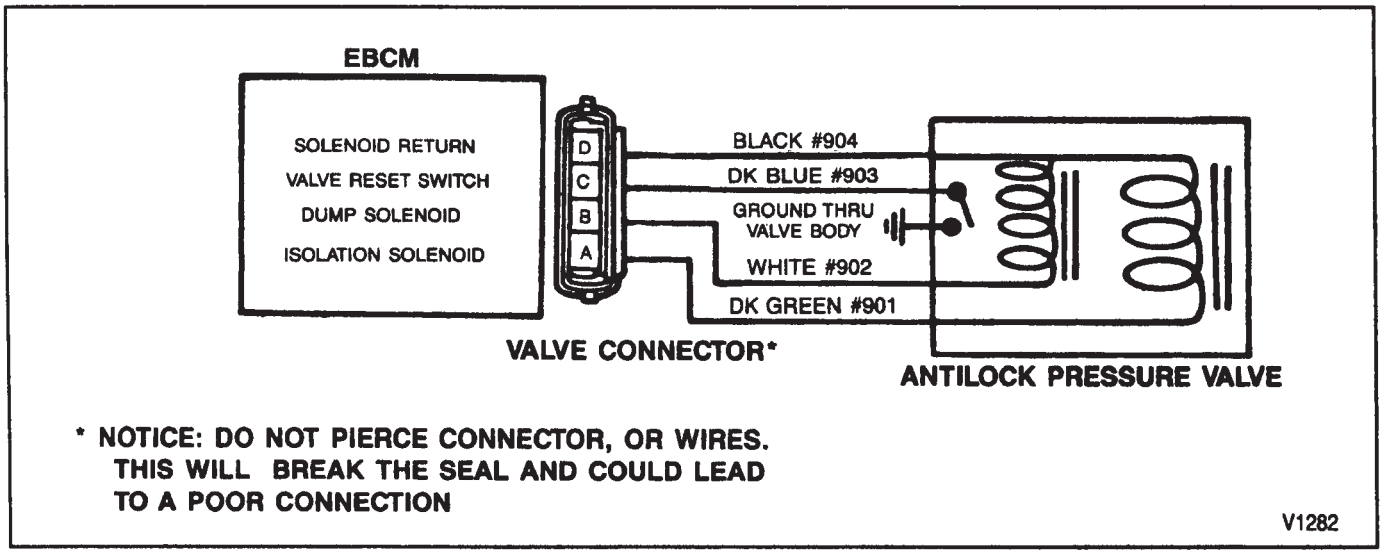

DIAGNOSTIC TROUBLE CODE 8
SHORTED DUMP SOLENOID OR EBCM MALFUNCTION

CIRCUIT DESCRIPTION:

A DTC 8 sets when the EBCM detects a short in the dump valve solenoid or circuit. Without the use of the dump valve, the EBCM cannot allow a pressure decrease or relieve the brake fluid in the accumulator. This DTC can be caused by a short in the APV, EBCM, or circuit between them.

TEST DESCRIPTION:

- Check the resistance of the dump valve solenoid winding.
- Check for a short to ground in the antilock pressure valve.
- Check if the connector repair corrected the condition.
- Check for a short to ground in the antilock pressure valve.

DIAGNOSTIC AIDS:

Do not pierce the electrical connectors, wires, seals, or insulation during testing. Doing so will break the seal and lead to corrosion and failure of the wiring and terminals.

DTC 8
SHORTED DUMP SOLENOID OR EBCM MALFUNCTION

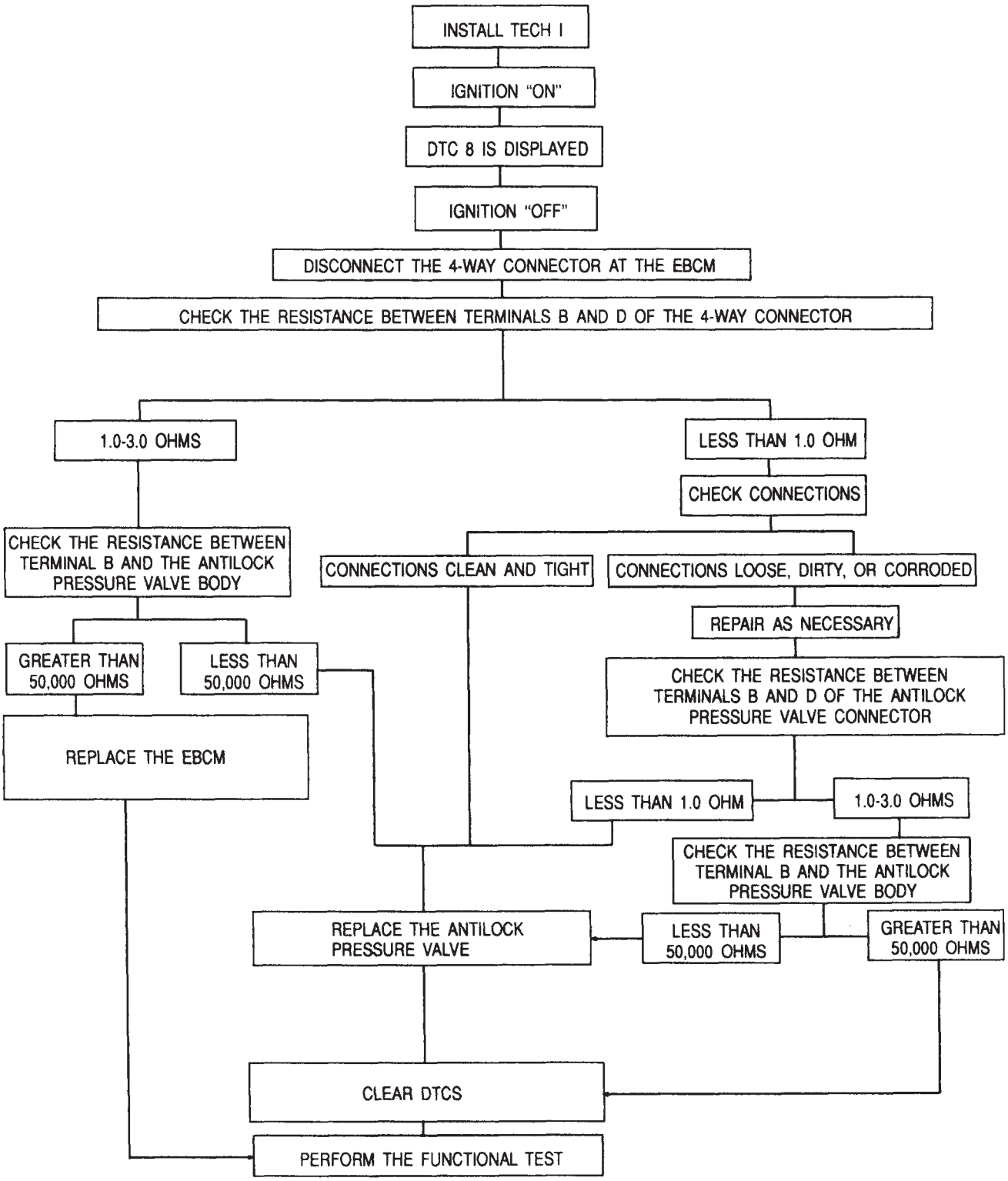

C0132

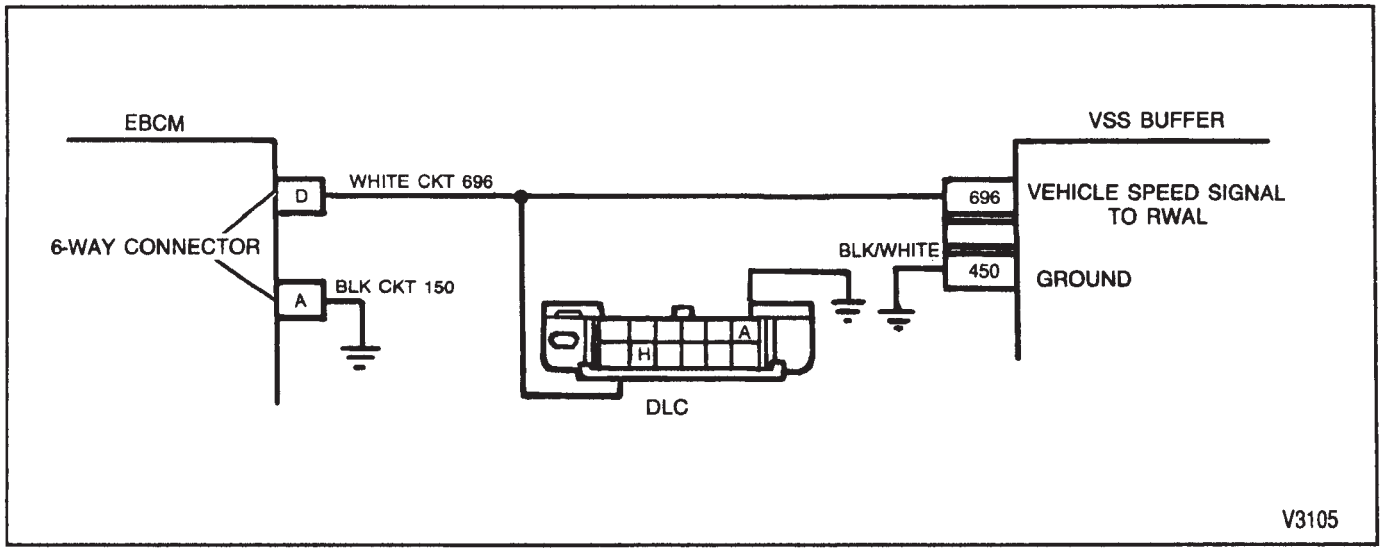

DIAGNOSTIC TROUBLE CODE 9
OPEN OR GROUNDED SPEED SIGNAL CIRCUIT

CIRCUIT DESCRIPTION:

A DTC 9 is a soft fault. If the speed signal line to the EBCM drops out and returns, this DTC is set in memory. The BRAKE lamp will illuminate when the DTC is set and turn off with the next ignition cycle. **Do not replace the EBCM to repair this DTC.** An open or grounded speed signal relates to a malfunction in the VSS buffer or speed signal circuit (CKT 696). It can be set by a poor connection in the speed signal line.

TEST DESCRIPTION:

- Check the voltage in CKT 696.
- Check for an open in CKT 696, a blown VSS buffer fuse, or a malfunctioning VSS buffer.
- Check the voltage applied at the EBCM connector.
- Check for added resistance or an open in CKT 696.

DIAGNOSTIC AIDS:

Do not replace the EBCM for this DTC. An EBCM malfunction will not cause this DTC to set.

If the BRAKE lamp is not on, do not ground DLC terminals H to A. Doing so will set a false DTC 9.

This is a soft fault that keeps the BRAKE lamp illuminated until the next ignition cycle.

If voltage readings are low or varying, the battery, charging system, or intermittent connections could be the cause. Check these areas before replacing any components.

Do not pierce the electrical connectors, wires, seals, or insulation during testing. Doing so will break the seal and lead to corrosion and failure of the wiring and terminals.

DTC 9
OPEN OR GROUNDED SPEED SIGNAL CIRCUIT

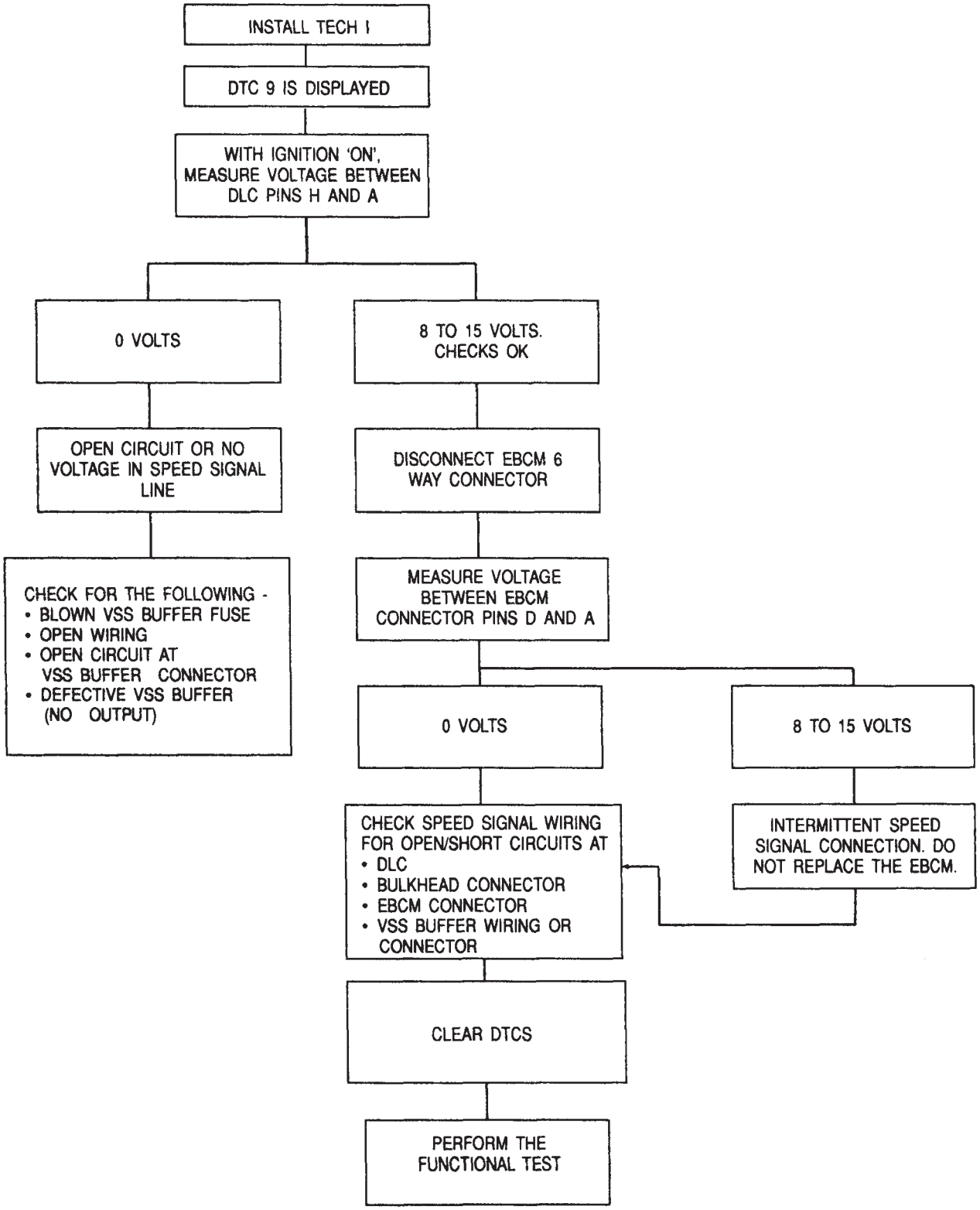

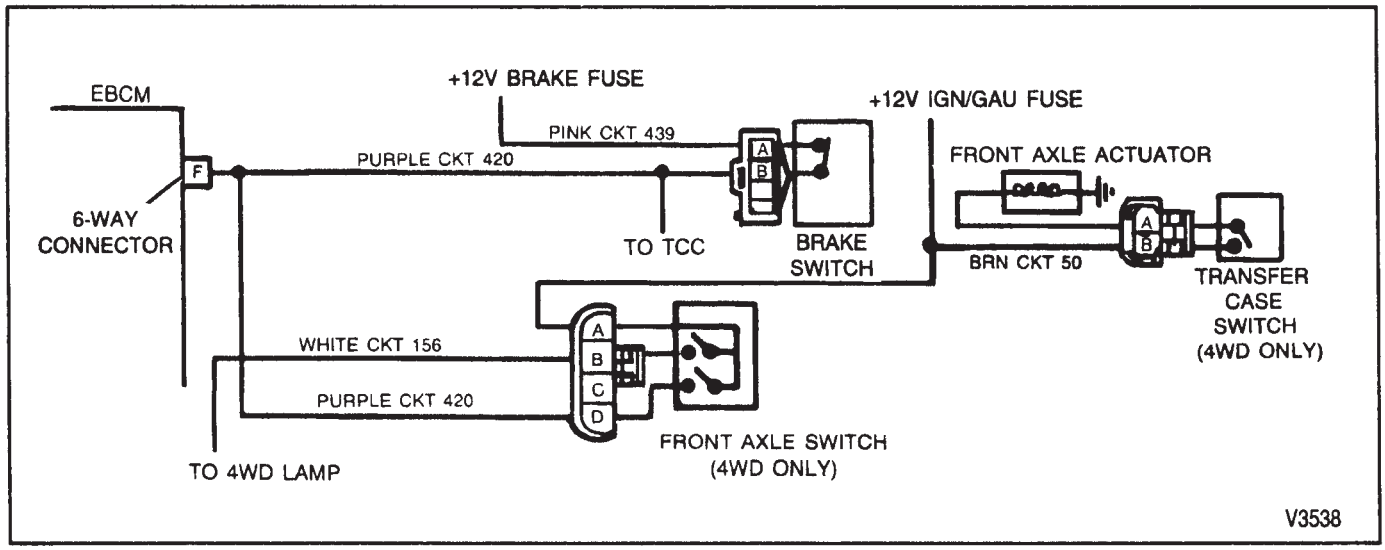

DIAGNOSTIC TROUBLE CODE 10 BRAKE SWITCH CIRCUIT

CIRCUIT DESCRIPTION:

A DTC 10 relates to the 12 volt signal in the brake switch circuit. The EBCM uses this circuit to prepare for a possible antilock stop. The brake switch closes when the brake pedal is released sending 12 volts to terminal F of the EBCM. Applying the brake pedal causes this signal to drop to less than 1 volt. When the EBCM sees this drop it gets ready to control the antilock pressure valve if necessary.

TEST DESCRIPTION:

- Check if voltage is available at the brake switch.
- Check if voltage is getting through the brake switch with the brake pedal released.
- Check if voltage is reaching terminal F and ground potential is available at terminal A.
- Check the operation of the brake switch during actual driving conditions. This helps determine if the DTC is intermittent.

DIAGNOSTIC AIDS:

Do not replace the EBCM or APV for this DTC. An EBCM or APV malfunction will not cause this DTC to set.

This DTC is set when the vehicle speed reaches 35 mph or greater and there is no 12 volt signal from the brake switch.

This DTC is a soft fault that turns on the BRAKE lamp until 12 volts is received from the brake switch.

Do not pierce the electrical connectors, wires, seals, or insulation during testing. Doing so will break the seal and lead to corrosion and failure of the wiring and terminals.

DTC 10-BRAKE SWITCH CIRCUIT

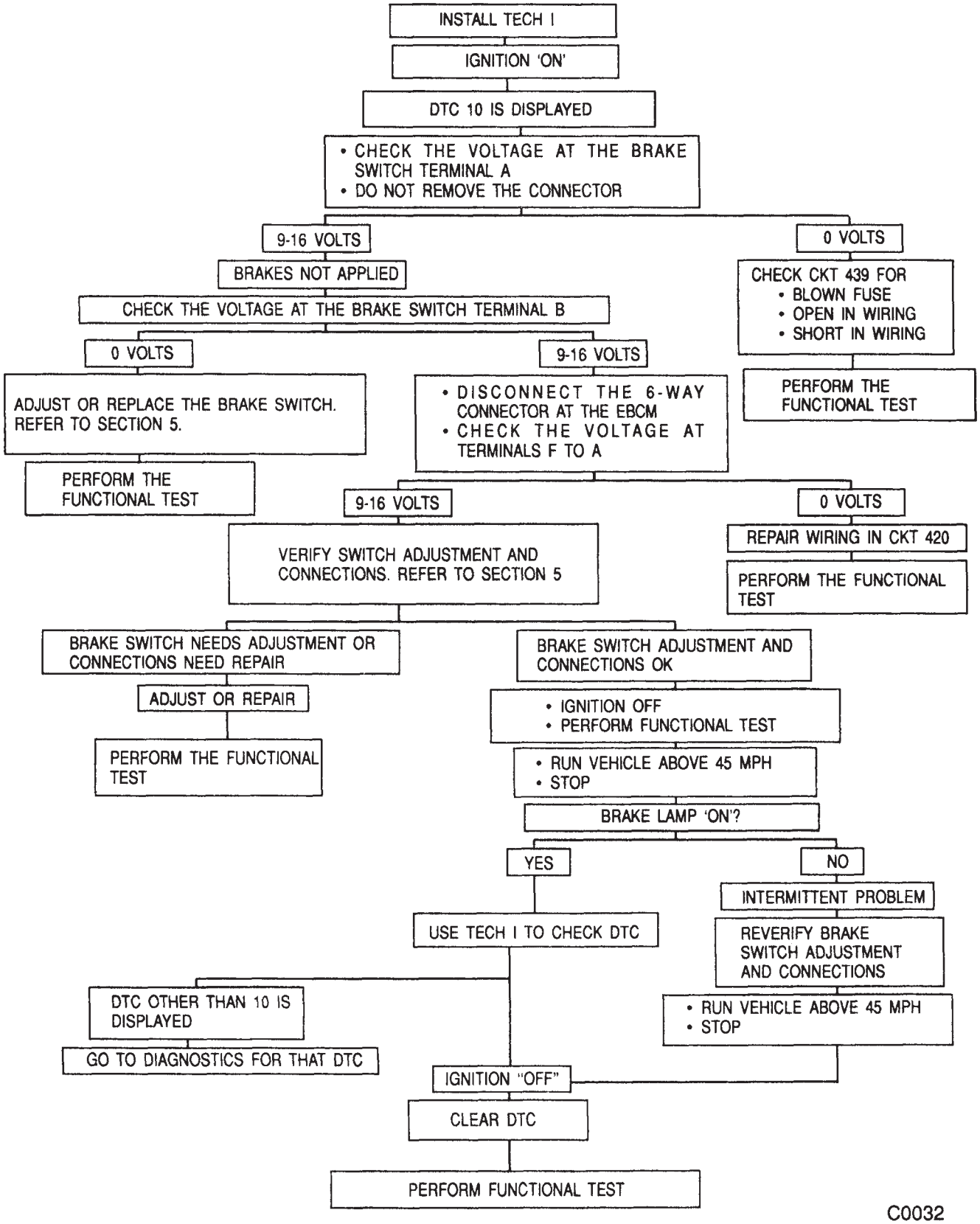

DIAGNOSTIC TROUBLE CODES 1, 11, AND 12 INVALID DIAGNOSTIC TROUBLE CODES

CIRCUIT DESCRIPTION:

DTCs 1, 11, and 12 do not exist. They are the result of misreading the BRAKE lamp flashes. **The Tech 1 scan tool will not display these DTCs.** If these DTCs are encountered, review the procedure for manually reading DTCs.

TEST DESCRIPTION

1. Check DTCs by manually grounding terminals A and H of the DLC.
2. Verify the correct procedure was used.
3. Check DTCs using the Tech 1.

DTCS 1, 11, AND 12
INVALID DIAGNOSTIC TROUBLE CODES

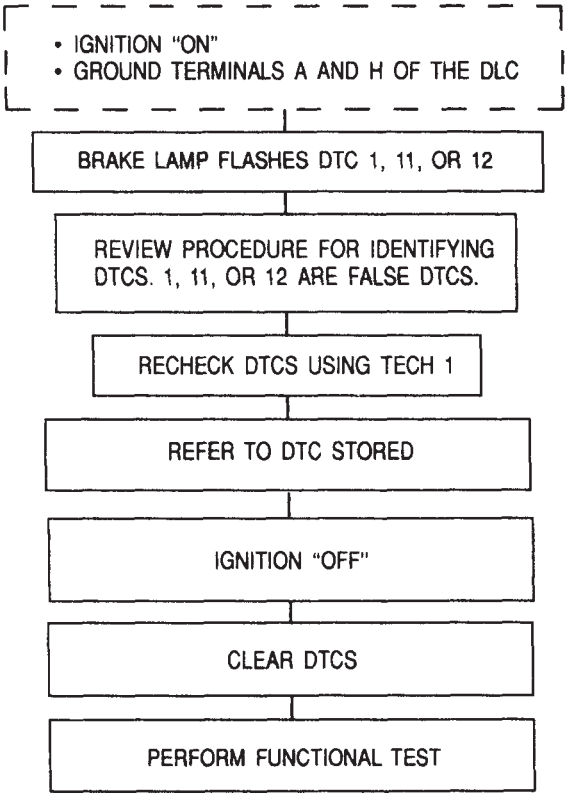

C0028

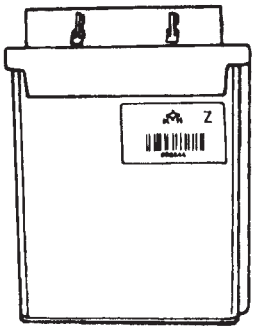

V3540

DIAGNOSTIC TROUBLE CODES 13, 14, AND 15 EBCM MALFUNCTION

CIRCUIT DESCRIPTION:

These DTCs relate to internal malfunctions in the EBCM. If the Tech 1 displays any of these DTCs, replace the EBCM. There are no tests to perform due to these DTCs being internal to the EBCM.

DTC 13, 14, AND 15
EBCM MALFUNCTION

C0024

ON-VEHICLE SERVICE

SERVICE PRECAUTIONS

The RWAL system is basically maintenance free. When working on these systems, the following must be observed:

- Before doing welding work on the vehicle with an electric welding unit, turn the ignition switch "OFF" and disconnect the EBCM connectors.
- Do not use a fast charger for starting the engine.
- Disconnect the negative battery cable when fast charging. Refer to SECTION 0A.
- Never disconnect the the battery from the vehicle electrical system with the engine running.
- Make sure all wiring harness connectors are securely connected.
- Always note the routing, position, mounting, and location of all components, wiring, connectors, clips, brackets, brake pipes, etc., when servicing the RWAL system. Speed sensor wiring, routing, and retention is especially important to help prevent false signals due to electrical noise picked up by the wiring. Proper system operation can only be achieved if the system is restored to its original equipment condition.

The above mentioned items do not cover every possibility, but must be followed when working on RWAL. When doing service work, become familiar with RWAL and how it may be interrelated with other components on the vehicle.

CHECKING AND ADDING FLUID

For information on checking and adding fluid to the brake hydraulic system, refer to SECTION 5A.

BLEEDING SYSTEM

NOTICE: The ignition switch must be in the "OFF" position or false DTCs could be set to memory.

Tools Required:
J 39177 Combination Valve Pressure Bleeding Tool
TK 00000 Tech-1 Scan Tool
TK 02650 RWAL/4WAL Cartridge Kit

1. Install J 39177 on the combination valve.
2. Check the master cylinder reservoir fluid level and fill if needed.
3. Bleed the wheel cylinders and calipers as described in SECTION 5.
4. Turn ignition switch "ON" and do three function tests with the Tech-1 scan tool.
5. Re-bleed the rear brakes. Refer to SECTION 5.
6. Evaluate brake pedal feel and braking performance.
7. Repeat the bleed procedure if needed.

ELECTRIC BRAKE CONTROL MODULE

The EBCM is not serviceable. It must be replaced when the diagnostic trouble code charts show it is the cause of a malfunction.

Remove or Disconnect (Figure 7)

NOTICE: Do not touch the electrical connections and pins or allow them to come into contact with brake fluid. This will damage the EBCM.

1. Electrical connectors.
2. EBCM (1).
   - Pull it toward the front of the vehicle.

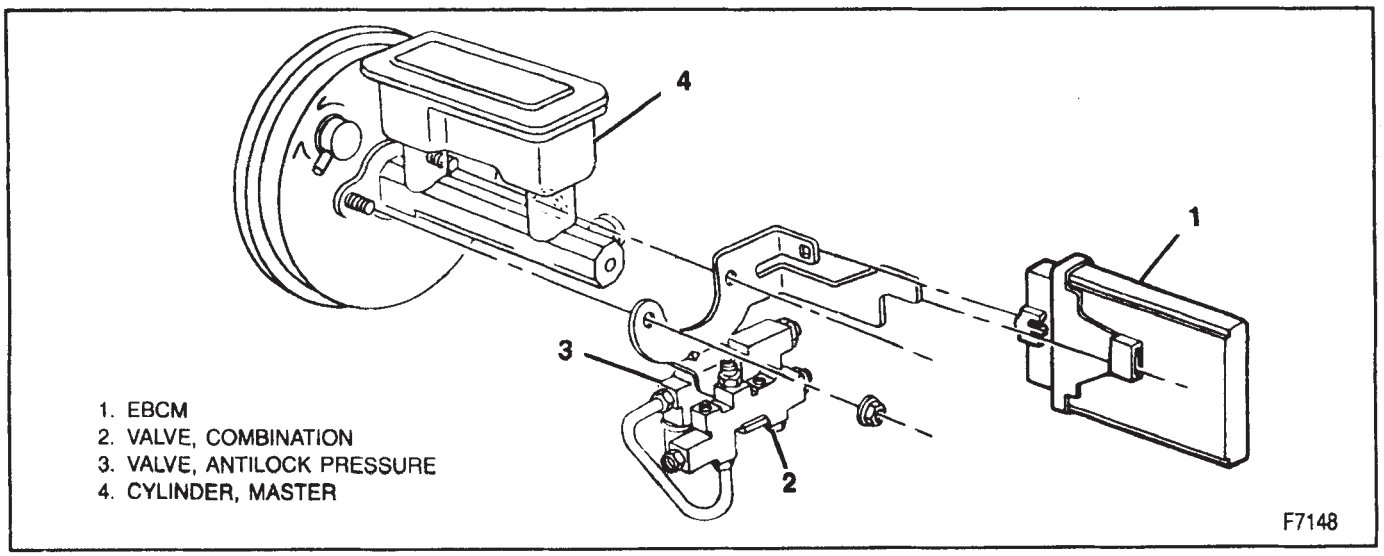

Figure 7—EBCM and Antilock Pressure Valve

Install or Connect (Figure 7)

NOTICE: Do not touch the electrical connections and pins or allow them to come into contact with brake fluid as this will damage the EBCM.

1. EBCM (1).
   - Slide it into the bracket until the tab locks into the hole.
2. Electrical connectors.
   - If there is brake fluid on the connectors, clean them with water followed by isopropyl alcohol.

ANTILOCK PRESSURE VALVE

The APV is not serviceable. It must be replaced when the diagnostic trouble code charts show it is the cause of a malfunction.

Remove or Disconnect (Figure 7)

1. Brake pipe fittings.
2. Bolts holding APV (3) to combination valve (2).

NOTICE: Do not touch the electrical connections and pins or allow them to come in contact with brake fluid as this will damage the EBCM.

3. Bottom electrical connector from EBCM.
   - Do not allow the antilock pressure valve to hang by the pigtail.
4. Antilock pressure valve (7).

Install or Connect (Figure 7)

NOTICE: For steps 2 and 4, see "Notice" on page 5E3A-1.

1. Antilock pressure valve (7).
2. Bolts.

Tighten

- Bolts to 29 N·m (21 ft. lbs.).

NOTICE: Do not touch the electrical connections and pins or allow them to come in contact with brake fluid as this will damage the EBCM.

3. Electrical connector to EBCM.
   - If there is brake fluid on the connectors, clean them with water followed by denatured alcohol.
4. Brake pipes.

Tighten

- Fittings to 24 N·m (18 ft. lbs.).
5. Bleed system. Refer to "Bleeding System."

VEHICLE SPEED SENSOR

The VSS is not serviceable. It should be replaced when needed. Refer to SECTION 7 for replacement procedures.

WARNING LAMP

For warning lamp on-vehicle service information, refer to SECTION 8C.

SPECIFICATIONS

FASTENER TIGHTENING SPECIFICATIONS

	N·m	Ft. Lbs.
Antilock Pressure Valve Mounting Bolts	29	21
Brake Pipe Fittings	24	18

T2566

SPECIAL TOOLS

1. 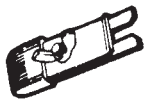

J 39177

2. 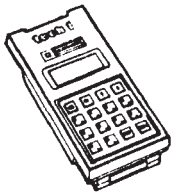

TK 00000

3. 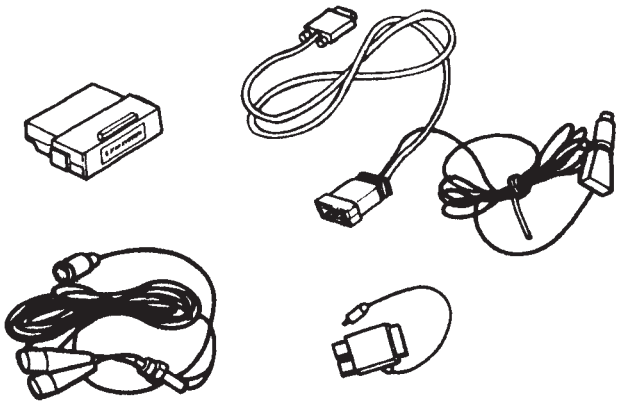

TK 02650 (4 PIECES)

1. COMBINATION VALVE PRESSURE BLEEDING TOOL
2. TECH-1 SCAN TOOL
3. RWAL/4WAL CARTRIDGE KIT

F9080